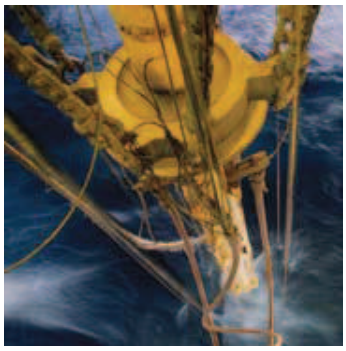

aerospace
climate control
electromechanical
filtration
fluid & gas handling
hydraulics
pneumatics
process control
sealing & shielding

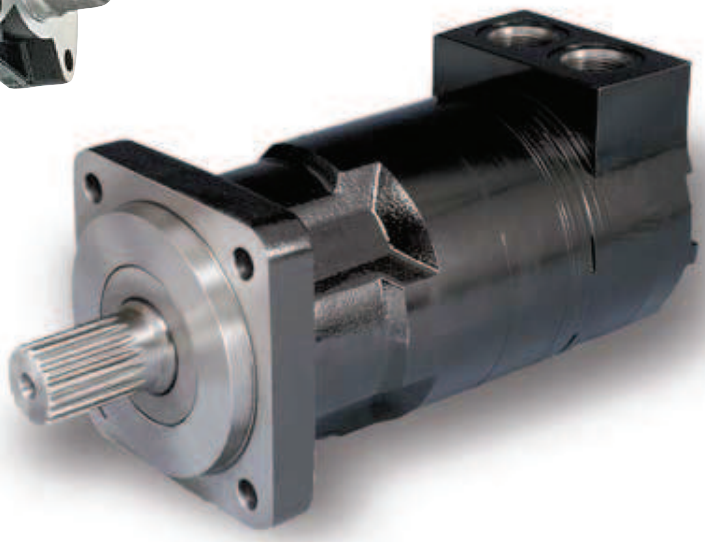

LSHT Torqmotors™ and Nichols™ Motors

Catalog No. HY13-1590-007/US,EU

Parker

ENGINEERING YOUR SUCCESS.

WARNING

FAILURE OR IMPROPER SELECTION OR IMPROPER USE OF THE PRODUCTS AND/OR SYSTEMS DESCRIBED HEREIN OR RELATED ITEMS CAN CAUSE DEATH, PERSONAL INJURY AND PROPERTY DAMAGE.

This document and other information from Parker Hannifin Corporation, its subsidiaries and authorized distributors provide product and/or system options for further investigation by users having technical expertise. It is important that you analyze all aspects of your application and review the information concerning the product or system in the current product catalog. Due to the variety of operating conditions and applications for these products or systems, the user, through its own analysis and testing, is solely responsible for making the final selection of the products and systems and assuring that all performance, safety and warning requirements of the application are met.

The products described herein, including without limitation, product features, specifications, designs, availability and pricing, are subject to change by Parker Hannifin Corporation and its subsidiaries at any time without notice.

Offer of Sale

The items described in this document are hereby offered for sale by Parker Hannifin Corporation, its subsidiaries or its authorized distributors. This offer and its acceptance are governed by the provisions stated on the separate page of this document entitled “Offer of Sale”.

© 2000, 2001, 2003, 2004, 2006 and 2009, Parker Hannifin Corporation

Parker Hannifin Corporation
Hydraulic Pump/Motor Division
Greeneville, Tennessee, USA

Wherever in the world machinery is designed, manufactured, or used, Parker is there to meet your hydraulic application requirements–with complete hydraulic component selection, worldwide availability, and technical assistance.

This catalog contains the information you need to order hydraulic motor products. It contains complete specifications, dimensions, and ordering information on the complete line of Parker hydraulic motor products, including technical data and reference material for designers, builders, and users of motion control machinery. No more shuffling through dozens of separate catalogs from dozens of separate suppliers.

And when you're ready to order, call your local Parker hydraulic distributor for fast delivery and service. Or call your Parker Hydraulic Sales Office (see listing at the back of this catalog).

In line with our policy of continuing product improvement, specifications and information contained in this catalog are subject to change.

Copyright © 2000, 2001, 2003, 2004, 2006 and 2009 by Parker Hannifin Corporation.
All rights reserved.

PRINTED IN THE U.S.A.

000 Intro & TOC.indd, js

Parker Hannifin Corporation
Hydraulic Pump/Motor Division
Greeneville, Tennessee, USA

Contents

Low Speed High Torque Torqmotor™ Series

TC Series....7–26
TB Series....27–54
TS Series....55–66
TE Series....67–96
Small Frame Options....97–104
TJ Series....105–118
Medium Frame Options....119–120
TF Series....121–146
TF Clutch Series....147–150
DF Brake Series....151–156
TL Series....157–170
TG Series....171–196
BG Brake Series....197–204
DG Brake Series....205–210
TH Series....211–232
BH Series....233–238
TK Series....239–252
Large Frame Options....253–258
Installation/Operation Data....259–262

Low Speed High Torque Nichols™ Motors Series

110A Series....263–282
700 Series....283–304
716 Series....305–324
Nichols™ Options....325–328
Installation/Operation Data....329–330

Engineering Data for Torqmotor™ and Nichols™ Motor....331–334
High Speed Hydraulic Motor....335–345
Offer of Sale....346-347
Sales Offices....Back Cover

Excellence of Design

The producers of Parker Hannifin's **Torqmotor™** Series motors have a history of manufacturing reliable, precision parts that stretches back over a century. Milestones include the first patent on roller vane rotor sets for low speed, high torque hydraulic motors. That was forty years ago. Today the technological advances continue.

In the Development Laboratory, engineers continuously measure and analyze motor data to move existing products to even higher levels of performance and to develop new products to serve the ever changing needs of our customers. Design integrity is assured by exhaustive testing on endurance stands. To be sure that this translates into superior performance, advanced manufacturing techniques are employed as well.

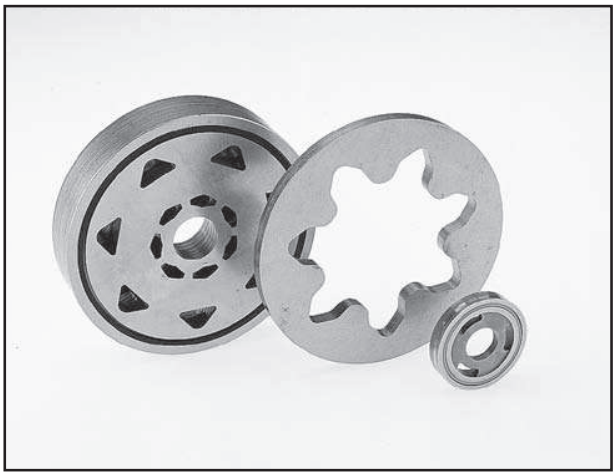

Excellence of Manufacturing

Central to manufacturing excellence is the understanding that quality parts make quality motors. The instrumentation in our Quality Assurance laboratory includes devices such as coordinate measuring machines, to accurately measure the parts that we manufacture as well as those that we purchase. Quality cannot be inspected in, however. It must be manufactured. Each machine operator is responsible for the quality of the part that comes off that machine. Efficiency is enhanced by our cellular manufacturing techniques. Accuracy is assured by statistical process control methods. Micrometers and specialized gages are at the disposal of the operator. As a final check, every motor is tested before shipment to our customer. Parker understands that our customers cannot produce quality products unless we do.

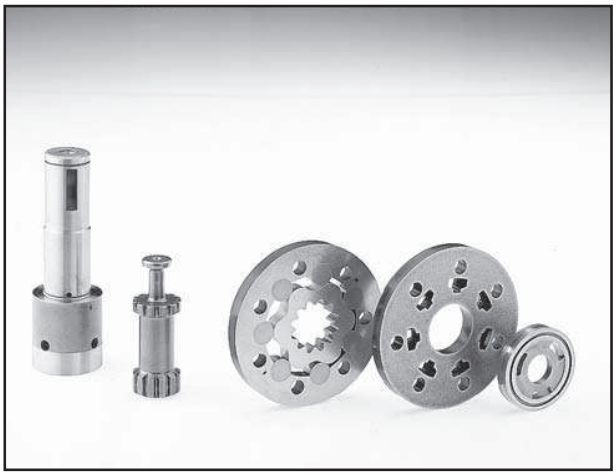

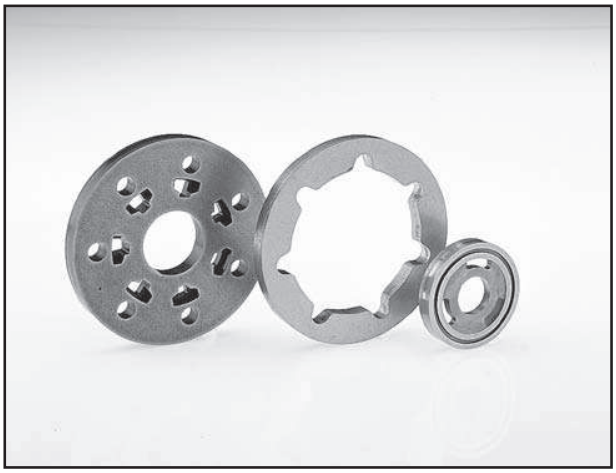

15 Displacements **15 Schluckvolumen** **15 Cylindrée** **15 Despazamientos**		(2.2 - 24.0 in³/rev) **36 . . . 390 cm³/rev**
	Cont	**Int**
Maximum Pressure **Max. Druckgefalle** **Chaute de pression max.** **Presion Maxima**	(1250 psid) **. . .86 bar**	(1750 psid) **. . .121 bar**
Maximum Oil Flow **Schluckstrom** **Débit d'huile** **Caudal Maximo de Aceite**		(15 gpm) **. . . 57 lpm**
Maximum Speed **Drehzahl** **Vitesse de rotation** **Velocidad Maxima**		(902 rpm) **902 rpm**
	Cont	**Int**
Maximum Torque **Max Drehmoment** **Couple Maxi** **Torque Maximo**	(1905 lb in) **215.2 Nm**	(2709 lb in) **306.1 Nm**
Maximum Side Load **Seitenlast** **Charges latèrales** **Carga Maxima Lateral**		(788 lb) **. . . 3505 N**

Big Performance In A Small Package

High Performance and long life in a reduced space envelope describe Parker's TC Series motors. High volume fluid flow continually washes across splines and seals to extend their life. Roller vanes and sealed commutation assure high volumetric efficiency and smooth low speed operation.

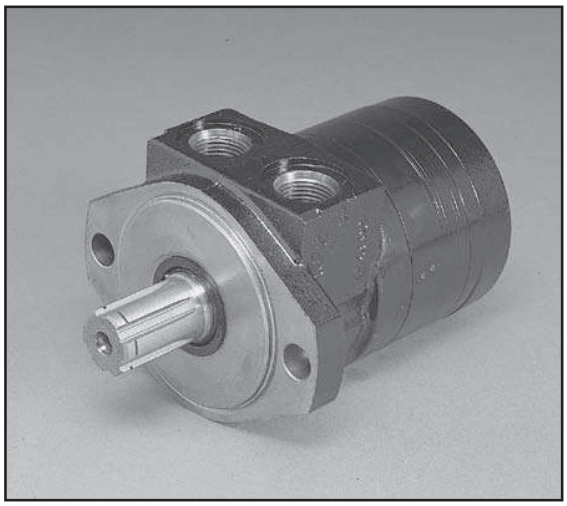

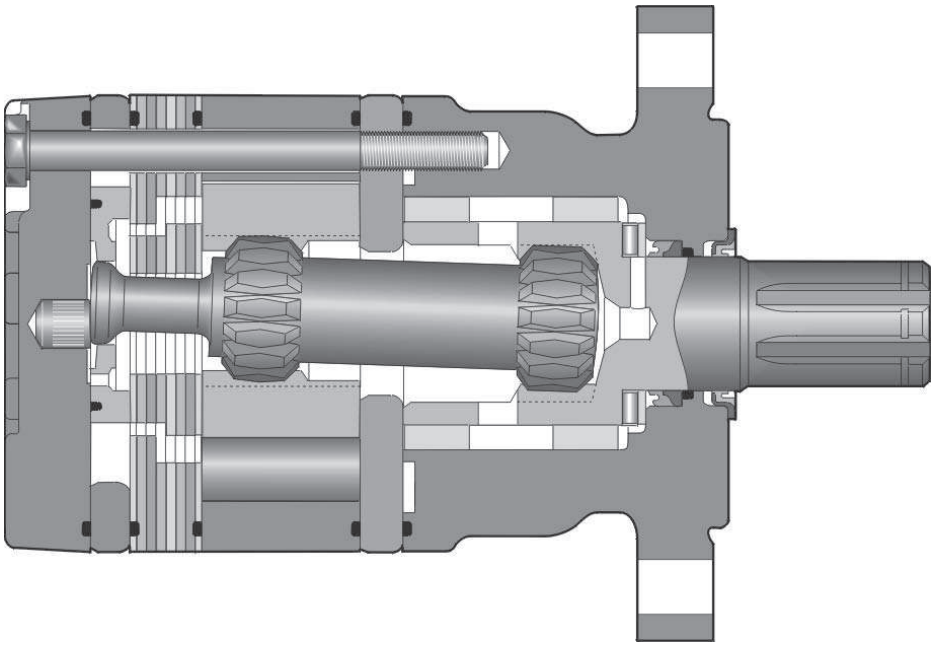

TC	XXXX	X	X	XX	0	XXXX
Series	Displacement Schluckvolumen Cylindrée Desplazamiento	Mounting Gehäuse Carter Montaje	Ports Anschluß Plan de raccordement Lumbreras	Shaft Welle Arbre Eje	Rotation Drehrichtung Direction de rotation Rotacion	Options Opciones

Code	cm^3/rev cm^3/tr cm^3/giro	in^3/rev
0036	36 /	2.2
0045	41 /	2.5
0050	49 /	3.0
0065	65 /	4.0
0080	82 /	5.0
0100	98 /	6.0
0130	130 /	8.0
0165	163 /	10.0
0195	195 /	11.9
0230	228 /	13.9
0260	260 /	15.9
0295	293 /	17.9
0330	328 /	20.0
0365	370 /	22.6
0390	392 /	24.0

Code	Mounting
A	SAE "A" 2 Bolt,
F	4 Bolt w/3/8-16 Thd

Code	Rotation
0	Standard B A
1	Reverse Timed Manifold B A

Code	Ports
M	5/16-18 UNC Manifold
P	1/2-14 NPTF
S	7/8-14 SAE

Code	Shaft
09	1" Straight w/0.38" Crosshole
10	1" Keyed
11	1" 6B Spline
13	Long 1" Keyed
21	1" Keyed; Corrosion Resistant
26	25mm Keyed w/ 8mm Key

Code	Options
AAAA	Black Paint
AAAB	No Paint
AAAC	Double Paint
AAAG	Viton Seals, Black Paint
AAAH	Viton Seals, No Paint
AAAJ	Vespel Commutator Seal, Black Paint
AAFG	Vespel Commutator Seal, No Paint
AABJ*	Free Running Rotorset, Black Paint
AABK*	Free Running Rotorset, No Paint

*Not applicable to TC0365 or TC0390 displacements

TC Series are not available rear ported.
For other available options, see pages 102–103.

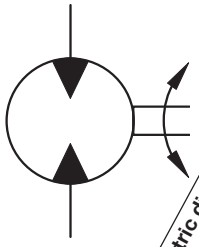

Motor Series TC	Geometric displacement / Geom. Schluckvolumen / Cylindrée / Despazamientos	Max. speed @ Max. intermittent flow / Max. Drehzahl Intermittierender Betrieb: / Vitesse de rotation maxi / Velocidad maxima a caudal intermitente maximo	Max. oil flow / Max. Schluckstrom / Débit d'huile maxi / Caudal Maximo de Aceite		Max. Differential Pressure / Max. Druckgefälle / Chute de pression maxi / Presion diferencial maxima		Max. supply pressure / Max. Eingangsdruck / Pression maxi entrée / Presion maxima de alimentacion		Max. torque / Max. Drehmoment / Couple maxi / Torque Maximo		Max. performance / Max. Leistungabgabe / Puissance de sortie maxi / Maximo redinmiento		Min. starting torque / Min. Anlaufmoment / Couple min. fourni au dé manrage / Torque minimo de arranque	
	cm³/rev in³/rev	rev/min	***cont / int**** **l/min** g/min		***cont / int**** **bar** psid		***max*** **bar** psig	***cont / int**** **Nm** lb-in		***max*** **KW** HP	***cont / int**** **Nm** lb-in	
TC 0036	**36** 2.2	902	**34** 9	**34** 9	**86** 1250	**121** 1750	**134** 1950	**31** 272	**44** 393	**4.2** 5.6	**16** 138	**27** 236
TC 0045	**41** 2.5	794	**34** 9	**34** 9	**86** 1250	**121** 1750	**134** 1950	**40** 351	**56** 496	**4.5** 6.1	**20** 174	**33** 295
TC 0050	**49** 3.0	688	**34** 9	**34** 9	**86** 1250	**121** 1750	**134** 1950	**48** 423	**67** 589	**4.7** 6.3	**27** 235	**39** 349
TC 0065	**65** 4.0	517	**34** 9	**34** 9	**86** 1250	**121** 1750	**134** 1950	**66** 582	**92** 810	**4.8** 6.5	**41** 361	**67** 590
TC 0080	**82** 5.0	413	**34** 9	**34** 9	**86** 1250	**121** 1750	**134** 1950	**96** 753	**119** 1050	**4.9** 6.6	**61** 539	**86** 758
TC 0100	**98** 6.0	460	**45** 12	**45** 12	**86** 1250	**121** 1750	**134** 1950	**100** 888	**140** 1240	**6.1** 8.2	**78** 691	**106** 934
TC 0130	**130** 8.0	429	**45** 12	**57** 15	**86** 1250	**121** 1750	**134** 1950	**138** 1218	**192** 1697	**7.5** 10.1	**111** 986	**169** 1492
TC 0165	**163** 10.0	346	**45** 12	**57** 15	**86** 1250	**121** 1750	**134** 1950	**173** 1529	**238** 2110	**7.5** 10.0	**139** 1232	**209** 1846
TC 0195	**195** 11.9	287	**45** 12	**57** 15	**86** 1250	**121** 1750	**134** 1950	**205** 1815	**286** 2532	**7.3** 9.8	**195** 1724	**264** 2332
TC 0230	**228** 13.9	246	**45** 12	**57** 15	**76** 1100	**107** 1550	**134** 1950	**215** 1905	**298** 2637	**6.3** 8.4	**195** 1722	**261** 2310
TC 0260	**260** 15.9	217	**45** 12	**57** 15	**66** 950	**97** 1400	**134** 1950	**211** 1870	**306** 2709	**5.4** 7.3	**183** 1618	**265** 2344
TC 0295	**293** 17.9	193	**45** 12	**57** 15	**59** 850	**86** 1250	**134** 1950	**208** 1843	**300** 2657	**4.7** 6.3	**189** 1675	**269** 2379
TC 0330	**328** 20.0	173	**45** 12	**57** 15	**52** 750	**76** 1100	**134** 1950	**206** 1819	**296** 2621	**4.0** 5.3	**187** 1655	**262** 2318
TC 0365	**370** 22.6	152	**45** 12	**57** 15	**45** 650	**66** 950	**134** 1950	**206** 1825	**296** 2622	**3.4** 4.6	**186** 1648	**276** 2443
TC 0390	**392** 24.0	144	**45** 12	**57** 15	**45** 650	**66** 950	**134** 1950	**207** 1832	**296** 2622	**3.2** 4.3	**192** 1698	**286** 2527

Performance data based on testing using 10W40 oil with a viscosity of 43,1 cSt. (200 SUS) at 54° C (130° F.). Performance data is typical. Actual data may vary slightly from one production motor to another.

Les donnees sur les performances sont basees sur des tests utilisant de l'huile 10W40 d'une viscosite de 200 SUS a 54°C (130°F). Ces donnees correspondent a des situations typiques. Les donnees reelles peuvent varier legerement d'un moteur de production a l'autre.

Leistungsdaten sind gemessen mit SAE 10W40 bei einer Viskositaet von 43,1 Cst bei 54°C. Geringfuegige Abweichungen von den Katalogdaten sind moeglich.

Datos tecnicos obtenidos con aceite 10W40 de 200 SUS de viscosidad a 54°C (130°F). Los datos proporcionados son valores tipcos. Los valores exactos reales podrian tener una pequena variacion entre distintos motores.

* Intermittent operation rating applies to 10% of every minute.
Intermittierende Werte maximal 10% von jeder Betriebsminute.
Fonctionnement interm. 10% max. de chaque minute d`utilisation.
Capacidad de funcionamiento intermitente valida para 10% por cada minuto.

TC 0036

2.2 cu in / rev

Flow (GPM)	PRESSURE (PSID) 500	750	1000	1250	1500	1750
.5	104 **27**	160 **18**	214 **8**			
1	108 **78**	167 **67**	222 **57**	277 **45**	328 **28**	380 **12**
2	109 **179**	169 **170**	229 **160**	287 **147**	344 **130**	396 **111**
3	107 **283**	172 **272**	235 **262**	293 **248**	351 **229**	405 **208**
4	105 **387**	168 **375**	236 **365**	295 **350**	353 **332**	410 **311**
5	103 **490**	166 **478**	233 **468**	295 **451**	354 **434**	412 **410**
7	90 **695**	156 **685**	220 **673**	286 **656**	348 **635**	410 **610**
9	76 **903**	142 **889**	208 **876**	272 **860**	332 **839**	393 **812**

TORQUE (LB IN) 272
SPEED (RPM) 860

36 cm³/rev

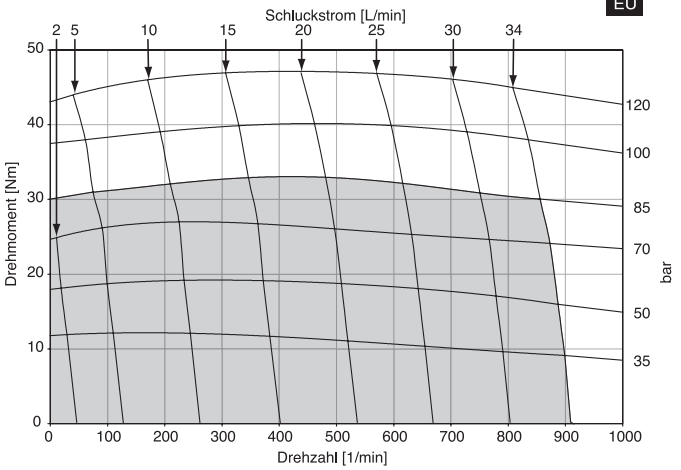

TC 0045

2.5 cu in / rev

Flow (GPM)	PRESSURE (PSID) 500	750	1000	1250	1500	1750
.5	124 **22**	200 **13**	254 **7**			
1	131 **73**	202 **67**	270 **61**	332 **51**	403 **42**	
2	131 **163**	201 **157**	279 **149**	350 **141**	412 **130**	481 **114**
3	127 **255**	201 **248**	279 **241**	352 **231**	424 **221**	496 **208**
4	122 **346**	192 **339**	279 **330**	350 **321**	421 **310**	498 **292**
5	113 **436**	183 **429**	270 **420**	341 **410**	412 **399**	489 **381**
7	105 **615**	174 **606**	262 **594**	332 **583**	403 **569**	481 **547**
9	93 **793**	168 **784**	249 **770**	324 **757**	397 **739**	473 **717**

TORQUE (LB IN) 324
SPEED (RPM) 757

41 cm³/rev

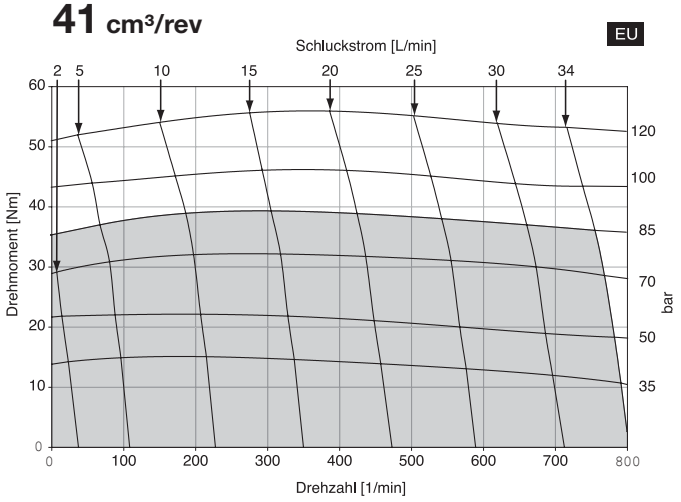

Cont. Int.

Intermittent operation rating applies to 10% of every minute.

Fonctionnement interm. 10% max. de chaque minute d`utilisation.

Performance data based on testing using 10W40 oil with a viscosity of 200 SUS at 54° C (130° F.). Performance data is typical. Actual data may vary slightly from one production motor to another.

Les donnees sur les performances sont basees sur des tests utilisant de l'huile 10W40 d'une viscosite de 200 SUS a 54°C (130°F). Ces donnees correspondent a des situations typiques. Les donnees reelles peuvent varier legerement d'un moteur de production a l'autre.

Intermittierende Werte maximal 10% von jeder Betriebsminute.

Capacidad de funcionamiento intermitente valida para 6 segundos por cada minuto.

Leistungsdaten sind gemessen mit SAE 10W40 bei einer Viskositaet von 43,1 Cst bei 54°C. Geringfuegige Abweichungen von den Katalogdaten sind moeglich.

Datos tecnicos obtenidos con aceite 10W40 de 200 SUS de viscosidad a 54°C (130°F). Los datos proporcionados son valores tipcos. Los valores exactos reales podrian tener una pequena variacion entre distintos motores.

TC 0050

3.0 cu in / rev

Flow (GPM)	PRESSURE (PSID) 500	750	1000	1250	1500	1750
.5	136 **28**	210 **17**				
1	148 **59**	226 **51**	305 **42**	377 **33**		
2	155 **136**	238 **129**	331 **117**	413 **107**	476 **95**	543 **79**
3	154 **215**	245 **207**	334 **197**	417 **186**	496 **173**	573 **157**
4	148 **292**	238 **284**	331 **273**	422 **263**	503 **251**	578 **228**
5	139 **369**	233 **361**	330 **350**	420 **340**	506 **327**	587 **305**
7	131 **519**	224 **511**	325 **498**	418 **486**	506 **470**	591 **445**
9	123 **672**	216 **661**	314 **646**	405 **632**	492 **615**	579 **592**

TORQUE (LB IN) 405
SPEED (RPM) 632

49 cm³/rev

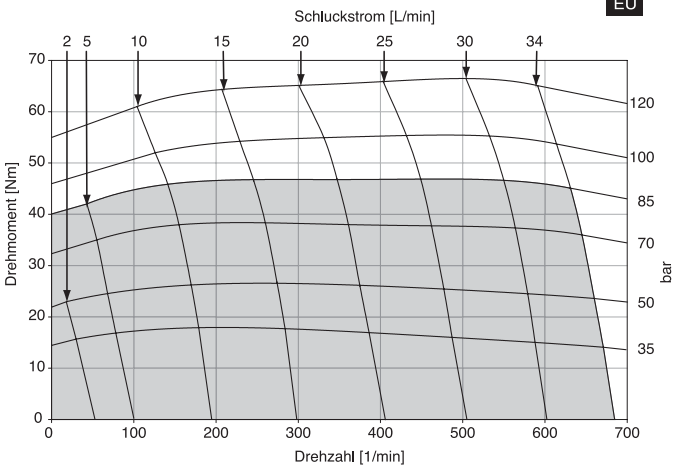

TC 0065

4.0 cu in / rev

Flow (GPM)	PRESSURE (PSID) 500	750	1000	1250	1500	1750
.5	207 **14**	333 **9**	425 **3**			
1	218 **47**	334 **43**	449 **36**	561 **30**	668 **23**	
2	231 **104**	352 **100**	471 **93**	583 **87**	700 **79**	797 **68**
3	218 **163**	341 **158**	463 **151**	582 **145**	697 **138**	811 **126**
4	209 **220**	330 **216**	462 **209**	574 **202**	695 **195**	808 **182**
5	201 **278**	320 **273**	449 **266**	571 **260**	688 **251**	801 **238**
7	186 **391**	311 **386**	439 **376**	563 **370**	682 **359**	799 **344**
9	176 **506**	297 **498**	427 **490**	547 **480**	675 **467**	796 **450**

TORQUE (LB IN) 547
SPEED (RPM) 480

65 cm³/rev

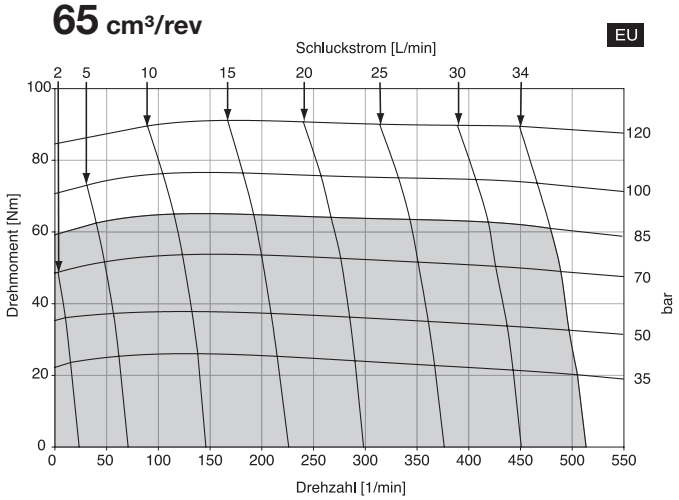

Cont. Int.

Intermittent operation rating applies to 10% of every minute.

Fonctionnement interm. 10% max. de chaque minute d`utilisation.

Performance data based on testing using 10W40 oil with a viscosity of 200 SUS at 54° C (130° F.). Performance data is typical. Actual data may vary slightly from one production motor to another.

Les donnees sur les performances sont basees sur des tests utilisant de l'huile 10W40 d'une viscosite de 200 SUS a 54°C (130°F). Ces donnees correspondent a des situations typiques. Les donnees reelles peuvent varier legerement d'un moteur de production a l'autre.

Intermittierende Werte maximal 10% von jeder Betriebsminute.

Capacidad de funcionamiento intermitente valida para 6 segundos por cada minuto.

Leistungsdaten sind gemessen mit SAE 10W40 bei einer Viskositaet von 43,1 Cst bei 54°C. Geringfuegige Abweichungen von den Katalogdaten sind moeglich.

Datos tecnicos obtenidos con aceite 10W40 de 200 SUS de viscosidad a 54°C (130°F). Los datos proporcionados son valores tipcos. Los valores exactos reales podrian tener una pequena variacion entre distintos motores.

TC 0080

5.0 cu in / rev

PRESSURE (PSID)

Flow (GPM)	500	750	1000	1250	1500	1750
.5	270 **14**	431 **10**	558 **8**	700 **3**		
1	289 **39**	438 **37**	585 **33**	730 **30**	871 **25**	
2	291 **86**	445 **83**	599 **78**	753 **75**	918 **70**	1037 **61**
3	284 **132**	442 **129**	600 **125**	753 **121**	903 **116**	1049 **108**
4	272 **179**	431 **176**	563 **171**	745 **167**	897 **162**	1046 **153**
5	255 **225**	414 **221**	574 **217**	730 **212**	882 **207**	1033 **198**
7	239 **315**	396 **312**	559 **306**	714 **300**	867 **294**	1021 **284**
9	226 **407**	382 **402**	547 **394**	703 **389**	855 **382**	1011 **369**

TORQUE (LB IN) 703
SPEED (RPM) 389

82 cm³/rev

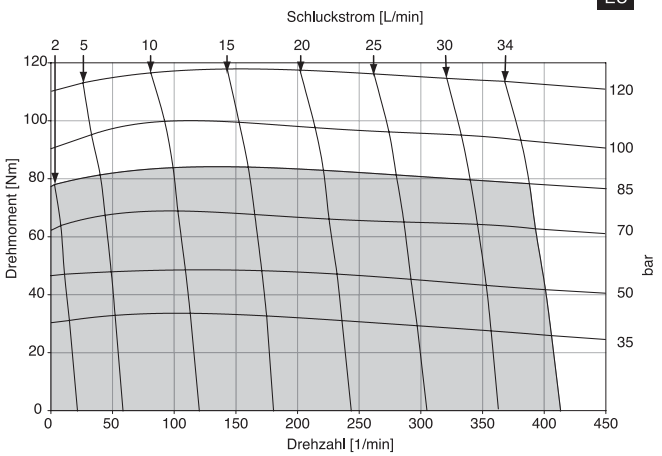

TC 0100

6.0 cu in / rev

PRESSURE (PSID)

Flow (GPM)	500	750	1000	1250	1500	1750
.5	319 **8**	485 **4**				
1	337 **30**	514 **26**	684 **22**	855 **18**	1022 **14**	
2	345 **67**	546 **64**	728 **61**	909 **56**	1087 **51**	1222 **44**
3	335 **108**	522 **104**	707 **100**	888 **96**	1065 **92**	1243 **84**
4	323 **146**	508 **142**	697 **139**	879 **135**	1059 **130**	1241 **123**
5	305 **185**	490 **181**	681 **177**	864 **173**	1044 **168**	1227 **161**
7	282 **261**	465 **256**	658 **251**	842 **247**	1024 **241**	1209 **232**
9	262 **337**	444 **332**	638 **326**	822 **322**	1005 **315**	1193 **304**
12	203 **448**	384 **443**	582 **438**	763 **433**	943 **427**	1121 **412**

TORQUE (LB IN) 763
SPEED (RPM) 433

98 cm³/rev

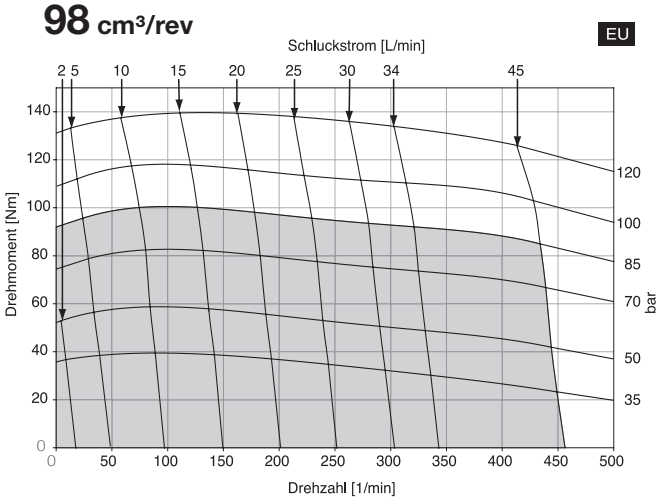

Cont. Int.

Intermittent operation rating applies to 10% of every minute.

Fonctionnement interm. 10% max. de chaque minute d`utilisation.

Performance data based on testing using 10W40 oil with a viscosity of 200 SUS at 54° C (130° F.). Performance data is typical. Actual data may vary slightly from one production motor to another.

Les donnees sur les performances sont basees sur des tests utilisant de l'huile 10W40 d'une viscosite de 200 SUS a 54°C (130°F). Ces donnees correspondent a des situations typiques. Les donnees reelles peuvent varier legerement d'un moteur de production a l'autre.

Intermittierende Werte maximal 10% von jeder Betriebsminute.

Capacidad de funcionamiento intermitente valida para 6 segundos por cada minuto.

Leistungsdaten sind gemessen mit SAE 10W40 bei einer Viskositaet von 43,1 Cst bei 54°C. Geringfuegige Abweichungen von den Katalogdaten sind moeglich.

Datos tecnicos obtenidos con aceite 10W40 de 200 SUS de viscosidad a 54°C (130°F). Los datos proporcionados son valores tipcos. Los valores exactos reales podrian tener una pequena variacion entre distintos motores.

TC 0130

8.0 cu in / rev

Flow (GPM)	PRESSURE (PSID) 500	750	1000	1250	1500	1750
.5	447 **9**	718 **7**	921 **5**	1188 **2**		
1	472 **25**	717 **23**	960 **21**	1201 **19**	1442 **17**	
2	476 **54**	726 **52**	970 **50**	1213 **48**	1455 **45**	1698 **40**
3	461 **83**	710 **82**	961 **79**	1204 **76**	1448 **74**	1693 **70**
4	440 **112**	689 **111**	942 **108**	1188 **106**	1432 **103**	1677 **100**
5	417 **141**	663 **139**	918 **137**	1164 **135**	1408 **132**	1654 **129**
7	384 **198**	629 **195**	857 **193**	1102 **191**	1346 **188**	1597 **184**
9	308 **256**	533 **256**	792 **252**	1034 **250**	1279 **246**	1533 **241**
12	270 **342**	499 **340**	758 **337**	998 **334**	1239 **330**	1492 **324**
15	188 **428**	418 **426**	677 **422**	911 **420**	1144 **416**	1391 **412**

TORQUE (LB IN) 1533
SPEED (RPM) 241

130 cm³/rev

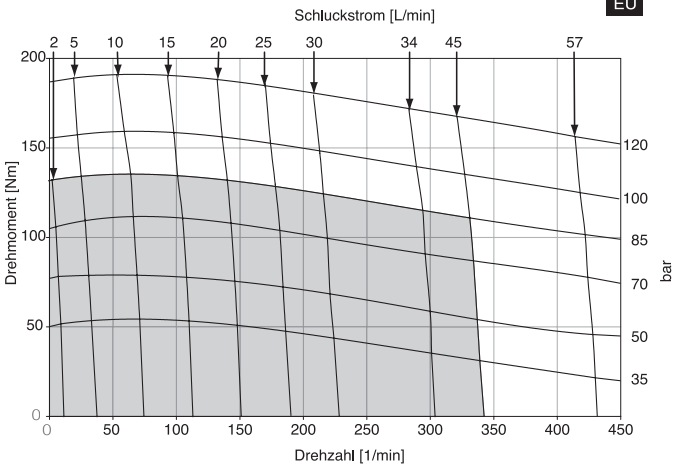

TC 0165

10.0 cu in / rev

Flow (GPM)	PRESSURE (PSID) 500	750	1000	1250	1500	1750
.5	554 **8**	881 **6**	1130 **4**	1457 **2**		
1	594 **20**	898 **19**	1197 **17**	1492 **16**	1785 **14**	
2	605 **43**	914 **42**	1220 **41**	1526 **39**	1819 **38**	2114 **35**
3	584 **67**	899 **66**	1211 **64**	1518 **63**	1833 **61**	2109 **58**
4	554 **91**	866 **89**	1183 **89**	1491 **87**	1791 **86**	2092 **85**
5	519 **114**	827 **113**	1146 **111**	1455 **110**	1755 **109**	2057 **108**
7	477 **159**	782 **158**	1102 **156**	1408 **155**	1707 **153**	2011 **150**
9	376 **207**	671 **205**	991 **204**	1290 **202**	1587 **201**	1894 **198**
12	323 **248**	613 **247**	933 **245**	1229 **244**	1519 **243**	1833 **241**
15	194 **347**	467 **345**	786 **344**	1073 **342**	1363 **341**	1673 **340**

TORQUE (LB IN) 1894
SPEED (RPM) 198

163 cm³/rev

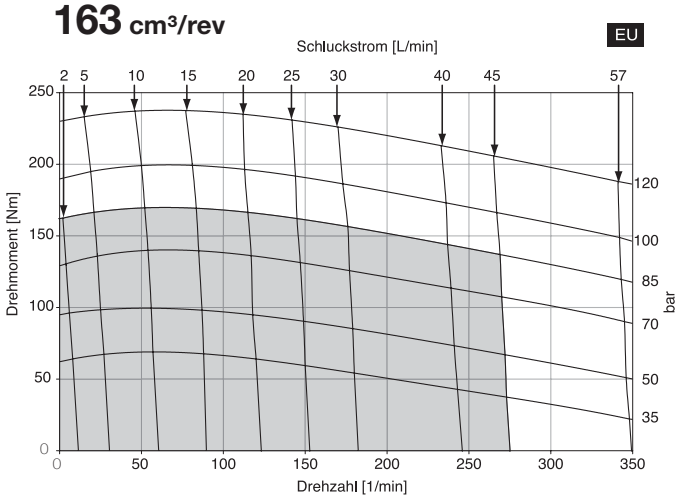

Cont. Int.

Intermittent operation rating applies to 10% of every minute.

Fonctionnement interm. 10% max. de chaque minute d`utilisation.

Performance data based on testing using 10W40 oil with a viscosity of 200 SUS at 54° C (130° F.). Performance data is typical. Actual data may vary slightly from one production motor to another.

Les donnees sur les performances sont basees sur des tests utilisant de l'huile 10W40 d'une viscosite de 200 SUS a 54°C (130°F). Ces donnees correspondent a des situations typiques. Les donnees reelles peuvent varier legerement d'un moteur de production a l'autre.

Intermittierende Werte maximal 10% von jeder Betriebsminute.

Capacidad de funcionamiento intermitente valida para 6 segundos por cada minuto.

Leistungsdaten sind gemessen mit SAE 10W40 bei einer Viskositaet von 43,1 Cst bei 54°C. Geringfuegige Abweichungen von den Katalogdaten sind moeglich.

Datos tecnicos obtenidos con aceite 10W40 de 200 SUS de viscosidad a 54°C (130°F). Los datos proporcionados son valores tipcos. Los valores exactos reales podrian tener una pequena variacion entre distintos motores.

TC 0195

11.9 cu in / rev PRESSURE (PSID)

Flow (GPM)	500	750	1000	1250	1500	1750
.5	678 **6**	1089 **5**	1402 **3**			
1	704 **17**	1070 **15**	1439 **14**	1805 **13**	2166 **11**	
2	717 **36**	1089 **35**	1459 **33**	1824 **32**	2176 **30**	2523 **27**
3	687 **56**	1061 **55**	1427 **54**	1789 **52**	2148 **51**	2508 **48**
4	650 **75**	1019 **74**	1389 **73**	1749 **72**	2105 **70**	2463 **67**
5	614 **95**	978 **94**	1350 **92**	1708 **91**	2061 **89**	2418 **86**
7	567 **132**	925 **132**	1301 **131**	1656 **129**	2007 **127**	2365 **124**
9	452 **201**	799 **200**	1177 **199**	1526 **198**	1873 **195**	2232 **192**
12	392 **227**	732 **226**	1107 **225**	1454 **224**	1803 **221**	2163 **218**
15	249 **290**	569 **289**	944 **288**	1288 **287**	1627 **285**	1985 **282**

TORQUE (LB IN) 2232
SPEED (RPM) 192

195 cm³/rev

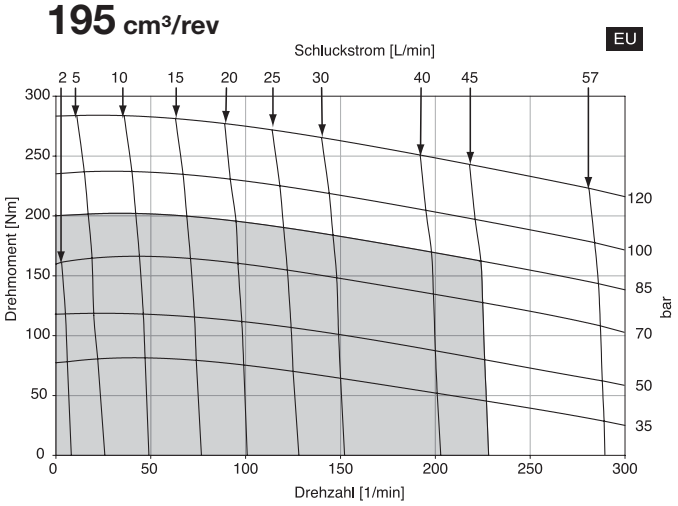

TC 0230

13.9 cu in / rev PRESSURE (PSID)

Flow (GPM)	500	750	1100	1300	1550
.5	837 **4**	1313 **3**			
1	856 **14**	1293 **12**	1892 **11**	2226 **9**	2637 **8**
2	846 **30**	1291 **29**	1888 **28**	2221 **25**	2621 **23**
3	820 **47**	1258 **46**	1853 **44**	2179 **42**	2581 **41**
4	784 **64**	1217 **63**	1809 **61**	2134 **60**	2531 **58**
5	741 **80**	1168 **79**	1760 **78**	2086 **76**	2475 **74**
7	683 **113**	1101 **112**	1692 **111**	2019 **110**	2405 **106**
9	518 **146**	908 **146**	1497 **144**	1833 **143**	2231 **140**
12	462 **176**	851 **175**	1432 **174**	1763 **173**	2153 **169**
15	337 **246**	720 **244**	1291 **243**	1604 **242**	1969 **237**

TORQUE (LB IN) 2231
SPEED (RPM) 140

228 cm³/rev

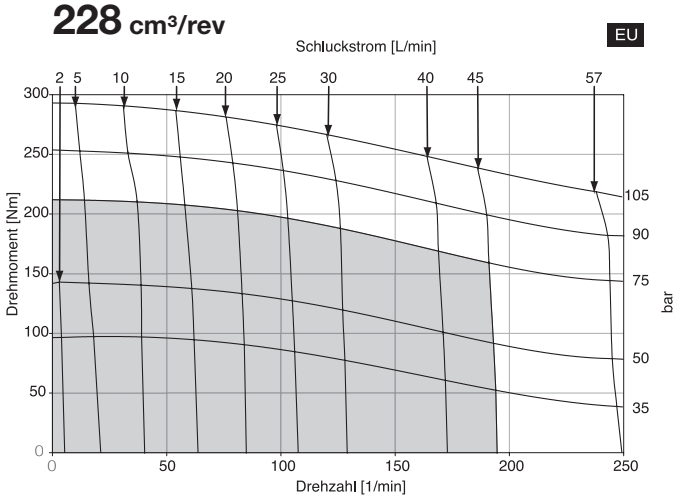

Cont. Int.

Intermittent operation rating applies to 10% of every minute.

Fonctionnement interm. 10% max. de chaque minute d`utilisation.

Performance data based on testing using 10W40 oil with a viscosity of 200 SUS at 54° C (130° F.). Performance data is typical. Actual data may vary slightly from one production motor to another.

Les donnees sur les performances sont basees sur des tests utilisant de l'huile 10W40 d'une viscosite de 200 SUS a 54°C (130°F). Ces donnees correspondent a des situations typiques. Les donnees reelles peuvent varier legerement d'un moteur de production a l'autre.

Intermittierende Werte maximal 10% von jeder Betriebsminute.

Capacidad de funcionamiento intermitente valida para 6 segundos por cada minuto.

Leistungsdaten sind gemessen mit SAE 10W40 bei einer Viskositaet von 43,1 Cst bei 54°C. Geringfuegige Abweichungen von den Katalogdaten sind moeglich.

Datos tecnicos obtenidos con aceite 10W40 de 200 SUS de viscosidad a 54°C (130°F). Los datos proporcionados son valores tipcos. Los valores exactos reales podrian tener una pequena variacion entre distintos motores.

TC 0260

15.9 cu in / rev PRESSURE (PSID)

Flow (GPM)	500	750	950	1200	1400
.5	950 **5**	1446 **4**	1828 **3**	2307 **2**	
1	978 **13**	1473 **12**	1860 **11**	2335 **11**	2713 **10**
2	989 **27**	1489 **26**	1880 **26**	2353 **25**	2728 **24**
3	946 **42**	1449 **42**	1837 **41**	2307 **40**	2689 **39**
4	889 **57**	1382 **56**	1775 **55**	2233 **55**	2608 **54**
5	837 **71**	1316 **71**	1704 **70**	2169 **70**	2536 **69**
7	765 **100**	1235 **100**	1623 **100**	2078 **99**	2437 **98**
9	588 **130**	1016 **129**	1391 **129**	1876 **129**	2230 **128**
12	523 **155**	952 **155**	1329 **155**	1767 **154**	2131 **154**
15	357 **217**	796 **216**	1177 **216**	1611 **216**	1969 **215**

TORQUE (LB IN) 2230
SPEED (RPM) 128

260 cm³/rev

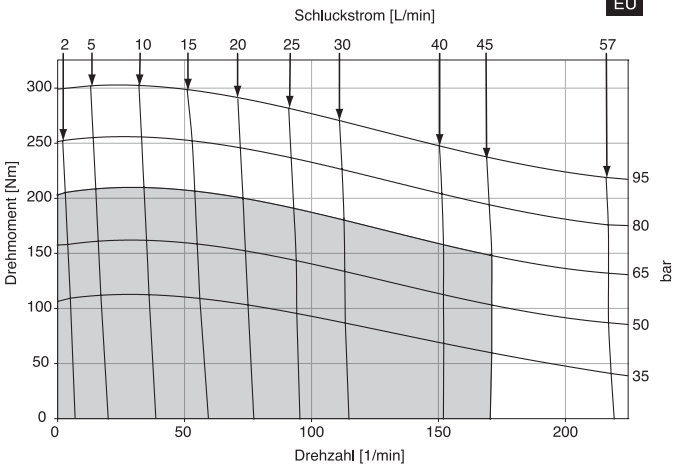

TC 0295

17.9 cu in / rev PRESSURE (PSID)

Flow (GPM)	500	850	1000	1250
.5	1037 **4**	1769 **2**		
1	1075 **11**	1834 **10**	2145 **9**	2656 **8**
2	1090 **23**	1850 **23**	2153 **22**	2656 **21**
3	1046 **36**	1807 **36**	2110 **36**	2611 **35**
4	976 **50**	1729 **49**	2040 **48**	2540 **48**
5	915 **63**	1668 **62**	1970 **61**	2468 **61**
7	837 **89**	1582 **88**	1883 **87**	2378 **87**
9	645 **115**	1349 **114**	1648 **114**	2163 **113**
12	575 **138**	1271 **137**	1569 **137**	2046 **136**
15	392 **192**	1098 **191**	1377 **191**	1831 **191**

TORQUE (LB IN) 2163
SPEED (RPM) 113

293 cm³/rev

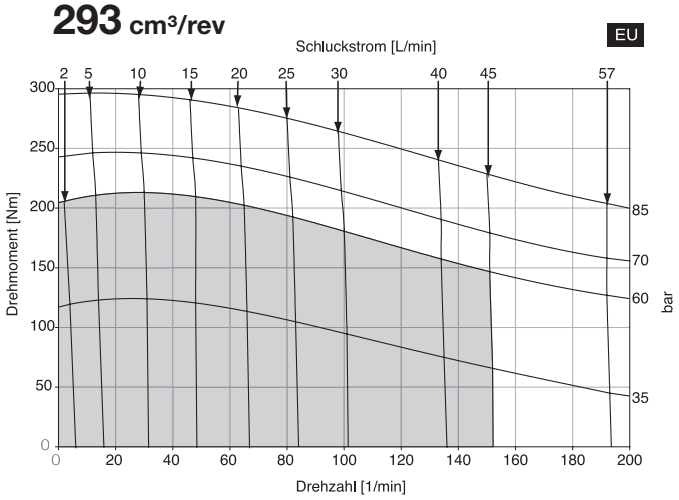

Cont. Int.

Intermittent operation rating applies to 10% of every minute.

Fonctionnement interm. 10% max. de chaque minute d`utilisation.

Performance data based on testing using 10W40 oil with a viscosity of 200 SUS at 54° C (130° F.). Performance data is typical. Actual data may vary slightly from one production motor to another.

Les donnees sur les performances sont basees sur des tests utilisant de l'huile 10W40 d'une viscosite de 200 SUS a 54°C (130°F). Ces donnees correspondent a des situations typiques. Les donnees reelles peuvent varier legerement d'un moteur de production a l'autre.

Intermittierende Werte maximal 10% von jeder Betriebsminute.

Capacidad de funcionamiento intermitente valida para 6 segundos por cada minuto.

Leistungsdaten sind gemessen mit SAE 10W40 bei einer Viskositaet von 43,1 Cst bei 54°C. Geringfuegige Abweichungen von den Katalogdaten sind moeglich.

Datos tecnicos obtenidos con aceite 10W40 de 200 SUS de viscosidad a 54°C (130°F). Los datos proporcionados son valores tipcos. Los valores exactos reales podrian tener una pequena variacion entre distintos motores.

TC 0330

20.0 cu in / rev PRESSURE (PSID)

Flow (GPM)	250	500	750	1100
.5	580 **4**	1177 **3**		
1	603 **10**	1207 **10**	1803 **9**	2298 **7**
2	598 **22**	1232 **22**	1803 **21**	2298 **19**
3	558 **34**	1158 **33**	1757 **32**	2251 **32**
4	507 **46**	1098 **45**	1693 **44**	2195 **44**
5	458 **57**	1033 **56**	1620 **56**	2124 **55**
7	381 **80**	968 **79**	1510 **79**	2030 **79**
9	226 **103**	733 **102**	1272 **103**	1808 **103**
12		636 **123**	1163 **123**	1706 **123**
15		426 **173**	934 **172**	1485 **172**

TORQUE (LB IN) 1808
SPEED (RPM) 103

328 cm³/rev

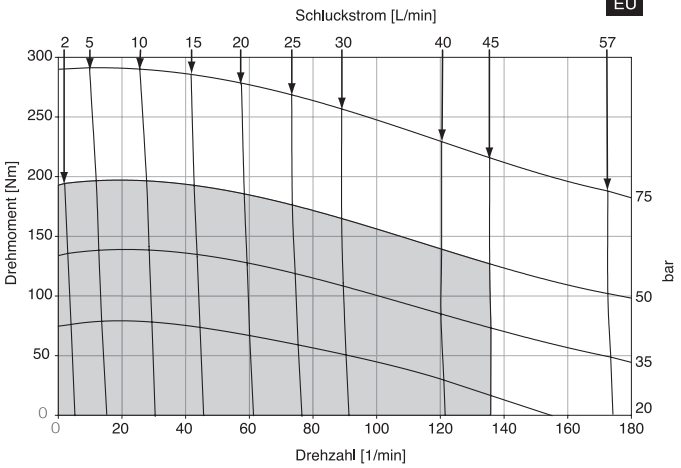

TC 0365

22.6 cu in / rev PRESSURE (PSID)

Flow (GPM)	250	500	650	950
.5	603 **4**	1260 **3**	1689 **2**	2529 **1**
1	636 **9**	1316 **8**	1745 **8**	2542 **7**
2	637 **19**	1351 **18**	1772 **18**	2551 **17**
3	587 **30**	1264 **29**	1684 **28**	2479 **28**
4	542 **40**	1212 **39**	1622 **39**	2408 **39**
5	484 **50**	1138 **50**	1550 **50**	2331 **49**
7	419 **71**	1055 **70**	1463 **70**	2239 **70**
9	259 **91**	793 **91**	1199 **91**	2025 **91**
12		741 **108**	1155 **108**	1962 **108**
15		619 **152**	1058 **152**	1828 **152**

TORQUE (LB IN) 2025
SPEED (RPM) 91

370 cm³/rev

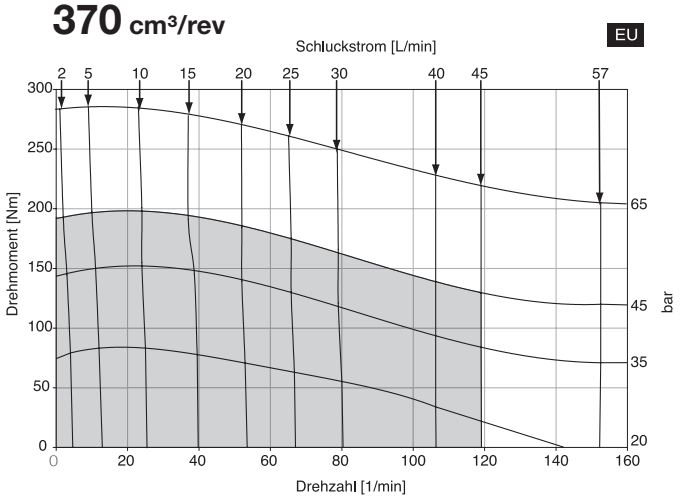

Cont. Int.

Intermittent operation rating applies to 10% of every minute.

Fonctionnement interm. 10% max. de chaque minute d`utilisation.

Performance data based on testing using 10W40 oil with a viscosity of 200 SUS at 54° C (130° F.). Performance data is typical. Actual data may vary slightly from one production motor to another.

Les donnees sur les performances sont basees sur des tests utilisant de l'huile 10W40 d'une viscosite de 200 SUS a 54°C (130°F). Ces donnees correspondent a des situations typiques. Les donnees reelles peuvent varier legerement d'un moteur de production a l'autre.

Intermittierende Werte maximal 10% von jeder Betriebsminute.

Capacidad de funcionamiento intermitente valida para 6 segundos por cada minuto.

Leistungsdaten sind gemessen mit SAE 10W40 bei einer Viskositaet von 43,1 Cst bei 54°C. Geringfuegige Abweichungen von den Katalogdaten sind moeglich.

Datos tecnicos obtenidos con aceite 10W40 de 200 SUS de viscosidad a 54°C (130°F). Los datos proporcionados son valores tipcos. Los valores exactos reales podrian tener una pequena variacion entre distintos motores.

TC 0390

24.0 cu in / rev PRESSURE (PSID)

Flow (GPM)	250	500	650	950
.5	671 **3**	1356 **2**		
1	694 **8**	1404 **8**	1825 **7**	2622 **6**
2	694 **18**	1421 **17**	1842 **17**	2604 **16**
3	648 **27**	1343 **26**	1754 **26**	2533 **26**
4	587 **38**	1264 **37**	1675 **37**	2453 **36**
5	534 **47**	1194 **47**	1595 **46**	2363 **46**
7	458 **66**	1107 **66**	1498 **66**	2265 **66**
9	282 **86**	880 **85**	1260 **85**	2016 **86**
12		819 **98**	1195 **98**	1942 **98**
15		540 **144**	908 **143**	1623 **144**

TORQUE (LB IN) 2016
SPEED (RPM) 86

392 cm³/rev

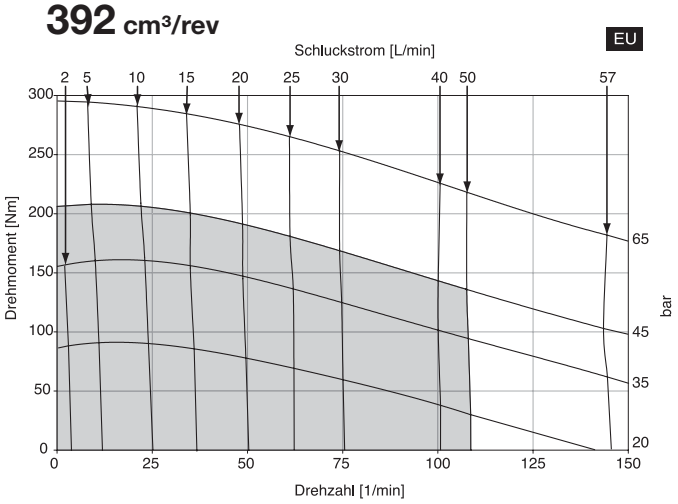

Cont. Int.

Intermittent operation rating applies to 10% of every minute.

Fonctionnement interm. 10% max. de chaque minute d`utilisation.

Performance data based on testing using 10W40 oil with a viscosity of 200 SUS at 54° C (130° F.). Performance data is typical. Actual data may vary slightly from one production motor to another.

Les donnees sur les performances sont basees sur des tests utilisant de l'huile 10W40 d'une viscosite de 200 SUS a 54°C (130°F). Ces donnees correspondent a des situations typiques. Les donnees reelles peuvent varier legerement d'un moteur de production a l'autre.

Intermittierende Werte maximal 10% von jeder Betriebsminute.

Capacidad de funcionamiento intermitente valida para 6 segundos por cada minuto.

Leistungsdaten sind gemessen mit SAE 10W40 bei einer Viskositaet von 43,1 Cst bei 54°C. Geringfuegige Abweichungen von den Katalogdaten sind moeglich.

Datos tecnicos obtenidos con aceite 10W40 de 200 SUS de viscosidad a 54°C (130°F). Los datos proporcionados son valores tipcos. Los valores exactos reales podrian tener una pequena variacion entre distintos motores.

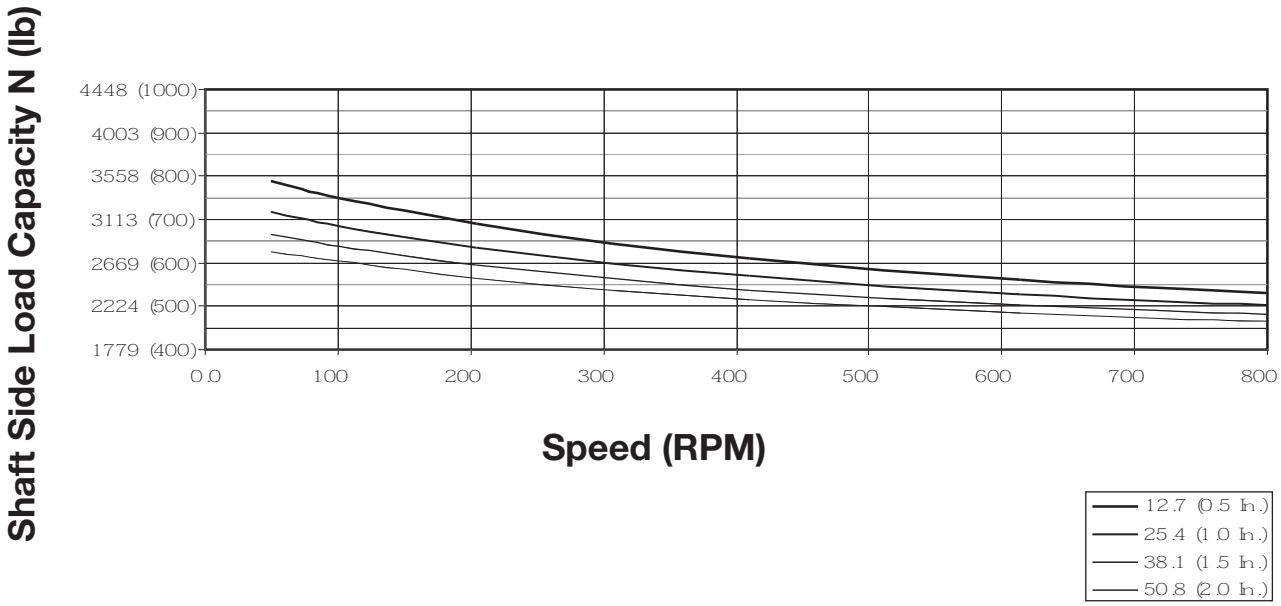

The allowable side load curve is based on bushing life of 2.5 x 10^6 revolutions.
Die zulaessige radiale Wellenbelastung bezieht sich auf die Lager-Lebensdauer 2,5 x 10^6 Umdrehungen.
L'effort radial admissible sur l'arbre depend a une duree de vie 2,5 x 10^6 de rotation.
La curva de carga lateral admisible se basa en vida util de cojinete de 2.5 x 10 revoluciones.

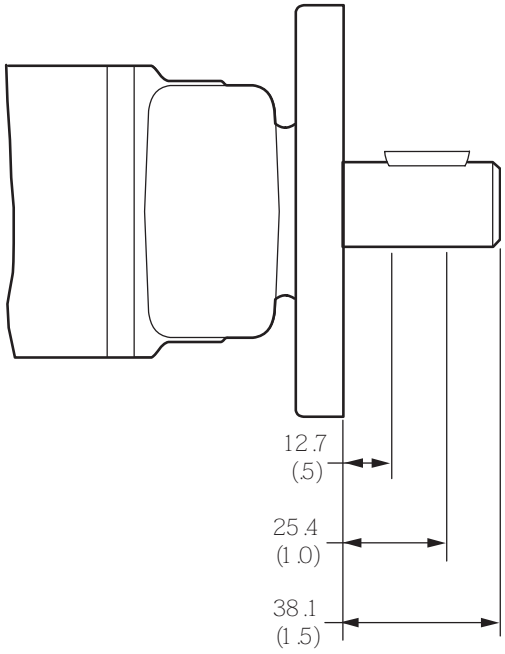

English equivalents for metric specifications are shown in ( ).

Code: AM

SAE "A" 2 Bolt, 5/16-18 UNC Manifold

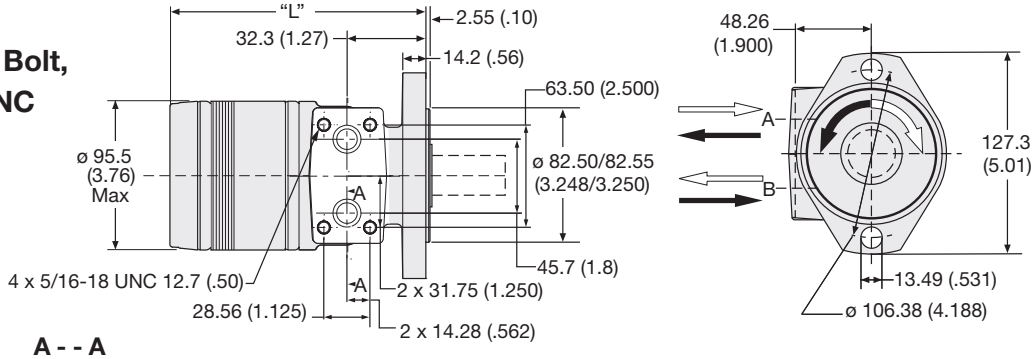

A - - A

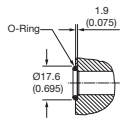

Motor with manifold mount is supplied with 2 O-rings.
Zum Motor mit Universalanschluß werden 2 O-Ringe geliefert.
Deux joints toriques sont livrés avec les moteurs a plan de raccordement universel.
Il blocchetto connessioni è corredato da 2 OR.

Code AP disp.	0036	0045	0050	0065	0080	0100	0130	0165	0195	0230	0260	0295	0330	0365	0390
Weight/Gewicht kg	**5.38**	**5.46**	**5.54**	**5.67**	**5.81**	**5.88**	**6.19**	**6.45**	**6.74**	**6.93**	**7.23**	**7.39**	**7.71**	**8.09**	**8.21**
Poids/Peso (lb)	(11.8)	(12.0)	(12.2)	(12.5)	(12.8)	(13.0)	(13.6)	(14.2)	(14.9)	(15.3)	(15.9)	(16.3)	(17.0)	(17.8)	(18.1)
Length "L" mm	**119.1**	**120.1**	**121.6**	**124.8**	**127.9**	**131.1**	**137.5**	**143.8**	**150.2**	**156.5**	**162.9**	**169.2**	**175.6**	**184.2**	**188.3**
"L" (in)	(4.69)	(4.73)	(4.79)	(4.91)	(5.04)	(5.16)	(5.41)	(5.66)	(5.91)	(6.16)	(6.41)	(6.66)	(6.91)	(7.25)	(7.41)

Code: AP

SAE "A" 2 Bolt, 1/2-14 NPTF

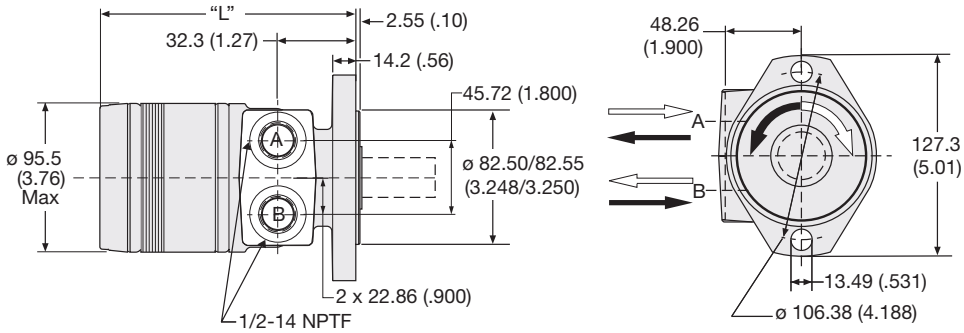

Code AP disp.	0036	0045	0050	0065	0080	0100	0130	0165	0195	0230	0260	0295	0330	0365	0390
Weight/Gewicht kg	**5.38**	**5.46**	**5.54**	**5.67**	**5.81**	**5.88**	**6.19**	**6.45**	**6.74**	**6.93**	**7.23**	**7.39**	**7.71**	**8.09**	**8.21**
Poids/Peso (lb)	(11.8)	(12.0)	(12.2)	(12.5)	(12.8)	(13.0)	(13.6)	(14.2)	(14.9)	(15.3)	(15.9)	(16.3)	(17.0)	(17.8)	(18.1)
Length "L" mm	**119.1**	**120.1**	**121.6**	**124.8**	**127.9**	**131.1**	**137.5**	**143.8**	**150.2**	**156.5**	**162.9**	**169.2**	**175.6**	**184.2**	**188.3**
"L" (in)	(4.69)	(4.73)	(4.79)	(4.91)	(5.04)	(5.16)	(5.41)	(5.66)	(5.91)	(6.16)	(6.41)	(6.66)	(6.91)	(7.25)	(7.41)

English equivalents for metric specifications are shown in ( ).

Code: AS

SAE "A" 2 Bolt, 7/8-14 SAE

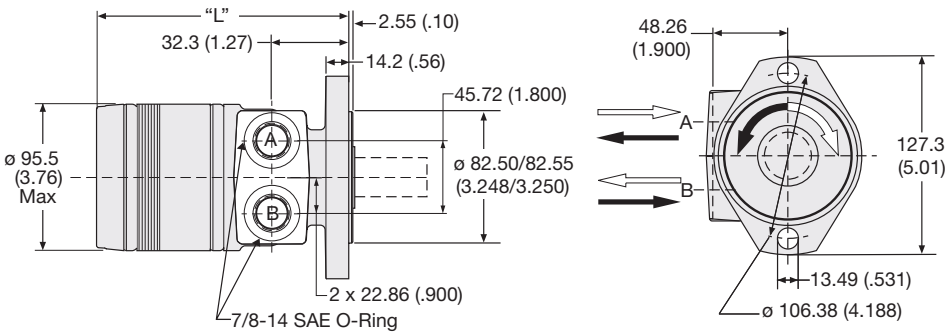

Code AP disp.	0036	0045	0050	0065	0080	0100	0130	0165	0195	0230	0260	0295	0330	0365	0390
Weight/Gewicht kg	**5.38**	**5.46**	**5.54**	**5.67**	**5.81**	**5.88**	**6.19**	**6.45**	**6.74**	**6.93**	**7.23**	**7.39**	**7.71**	**8.09**	**8.21**
Poids/Peso (lb)	(11.8)	(12.0)	(12.2)	(12.5)	(12.8)	(13.0)	(13.6)	(14.2)	(14.9)	(15.3)	(15.9)	(16.3)	(17.0)	(17.8)	(18.1)
Length "L" mm	**119.1**	**120.1**	**121.6**	**124.8**	**127.9**	**131.1**	**137.5**	**143.8**	**150.2**	**156.5**	**162.9**	**169.2**	**175.6**	**184.2**	**188.3**
"L" (in)	(4.69)	(4.73)	(4.79)	(4.91)	(5.04)	(5.16)	(5.41)	(5.66)	(5.91)	(6.16)	(6.41)	(6.66)	(6.91)	(7.25)	(7.41)

Code: FM

4 Bolt w/3/8-16 Thd, 5/16-18 UNC Manifold

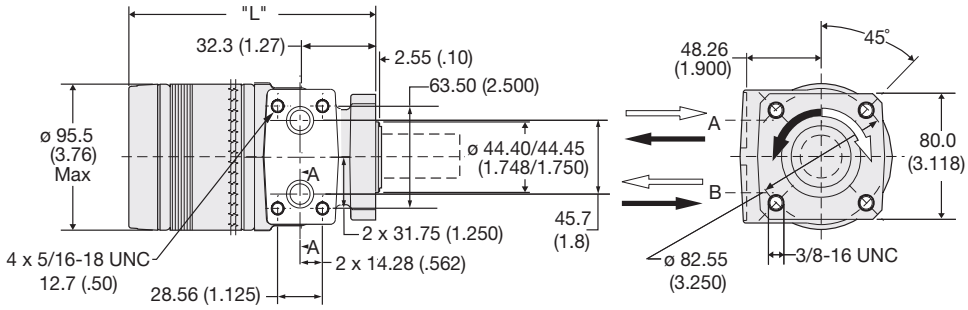

A - - A

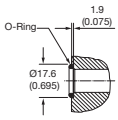

Motor with manifold mount is supplied with 2 O-rings.
Zum Motor mit Universalanschluß werden 2 O-Ringe geliefert.
Deux joints toriques sont livrés avec les moteurs a plan de raccordement universel.
Il blocchetto connessioni è corredato da 2 OR.

Code FM disp.	0036	0045	0050	0065	0080	0100	0130	0165	0195	0230	0260	0295	0330	0365	0390
Weight/Gewicht kg	**5.91**	**6.03**	**6.12**	**6.26**	**6.35**	**6.49**	**6.76**	**7.03**	**7.35**	**7.58**	**7.80**	**8.07**	**8.35**	**8.66**	**8.80**
Poids/Peso (lb)	(13.1)	(13.3)	(13.5)	(13.8)	(14.0)	(14.3)	(14.9)	(15.5)	(16.2)	(16.7)	(17.2)	(17.8)	(18.4)	(19.1)	(19.4)
Length "L" mm	**119.1**	**120.1**	**121.6**	**124.8**	**127.9**	**131.1**	**137.5**	**143.8**	**150.2**	**156.5**	**162.9**	**169.2**	**175.6**	**184.2**	**188.3**
"L" (in)	(4.69)	(4.73)	(4.79)	(4.91)	(5.04)	(5.16)	(5.41)	(5.66)	(5.91)	(6.16)	(6.41)	(6.66)	(6.91)	(7.25)	(7.41)

English equivalents for metric specifications are shown in ( ).

Code: FP

4 Bolt w/3/8-16 Thd, 1/2-14 NPTF

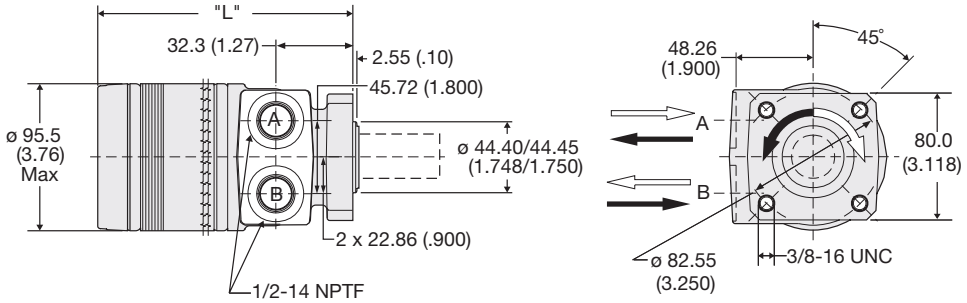

Code FP disp.	0036	0045	0050	0065	0080	0100	0130	0165	0195	0230	0260	0295	0330	0365	0390
Weight/Gewichtkg	**5.91**	**6.03**	**6.12**	**6.26**	**6.35**	**6.49**	**6.76**	**7.03**	**7.35**	**7.58**	**7.80**	**8.07**	**8.35**	**8.66**	**8.80**
Poids/Peso (lb)	(13.1)	(13.3)	(13.5)	(13.8)	(14.0)	(14.3)	(14.9)	(15.5)	(16.2)	(16.7)	(17.2)	(17.8)	(18.4)	(19.1)	(19.4)
Length "L" mm	**119.1**	**120.1**	**121.6**	**124.8**	**127.9**	**131.1**	**137.5**	**143.8**	**150.2**	**156.5**	**162.9**	**169.2**	**175.6**	**184.2**	**188.3**
"L" (in)	(4.69)	(4.73)	(4.79)	(4.91)	(5.04)	(5.16)	(5.41)	(5.66)	(5.91)	(6.16)	(6.41)	(6.66)	(6.91)	(7.25)	(7.41)

Code: FS

4 Bolt w/3/8-16 Thd, 7/8-14 SAE

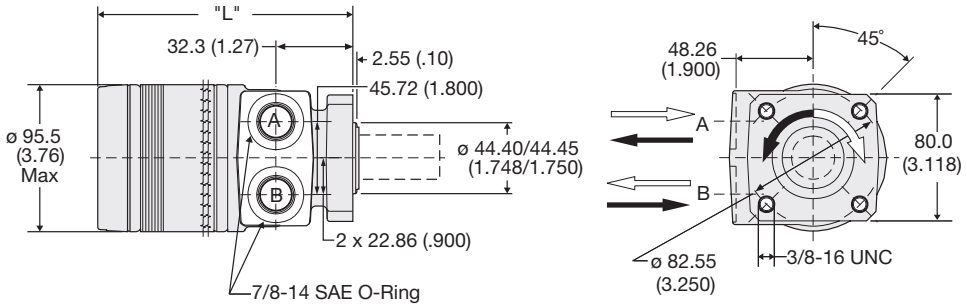

Code FP disp.	0036	0045	0050	0065	0080	0100	0130	0165	0195	0230	0260	0295	0330	0365	0390
Weight/Gewichtkg	**5.91**	**6.03**	**6.12**	**6.26**	**6.35**	**6.49**	**6.76**	**7.03**	**7.35**	**7.58**	**7.80**	**8.07**	**8.35**	**8.66**	**8.80**
Poids/Peso (lb)	(13.1)	(13.3)	(13.5)	(13.8)	(14.0)	(14.3)	(14.9)	(15.5)	(16.2)	(16.7)	(17.2)	(17.8)	(18.4)	(19.1)	(19.4)
Length "L" mm	**119.1**	**120.1**	**121.6**	**124.8**	**127.9**	**131.1**	**137.5**	**143.8**	**150.2**	**156.5**	**162.9**	**169.2**	**175.6**	**184.2**	**188.3**
"L" (in)	(4.69)	(4.73)	(4.79)	(4.91)	(5.04)	(5.16)	(5.41)	(5.66)	(5.91)	(6.16)	(6.41)	(6.66)	(6.91)	(7.25)	(7.41)

English equivalents for metric specifications are shown in ( ).

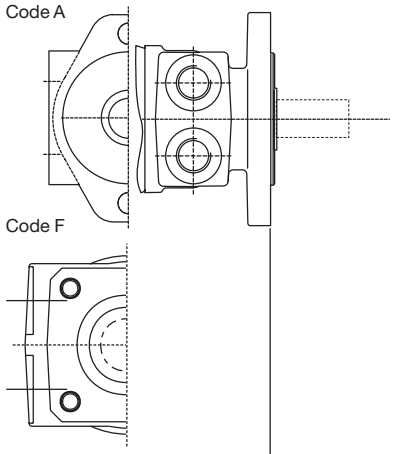

Code: 09

1" Straight with 0.38" Crosshole

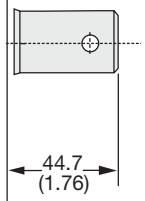

Code: 10

1" Keyed

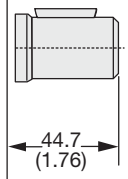

Code: 11

1" 6B Spline

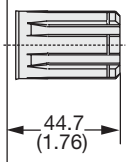

Code: 13

Long 1" Keyed

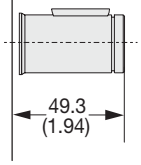

English equivalents for metric specifications are shown in ( ).

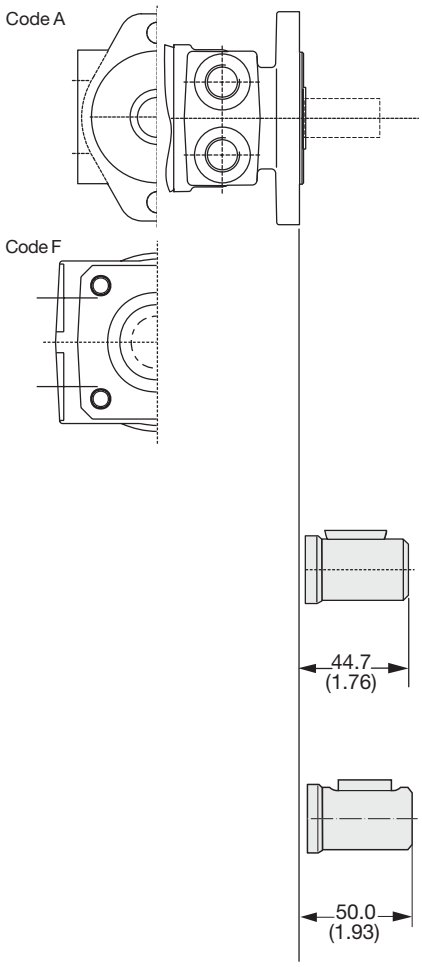

Code: 21

Corrosion Resistant

Code: 26

25mm Keyed
with 8mm Key

English equivalents for metric specifications are shown in ( ).

Code: 09

1" Straight with 0.38" Crosshole

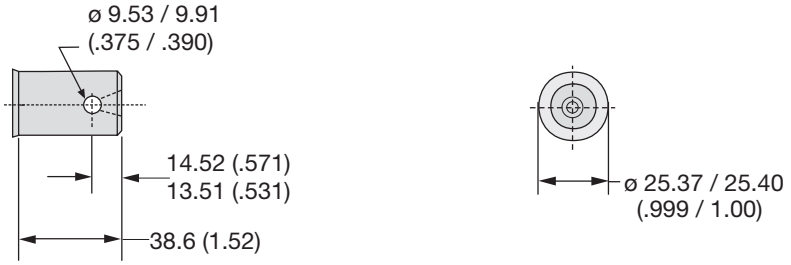

Code: 10

1" Keyed

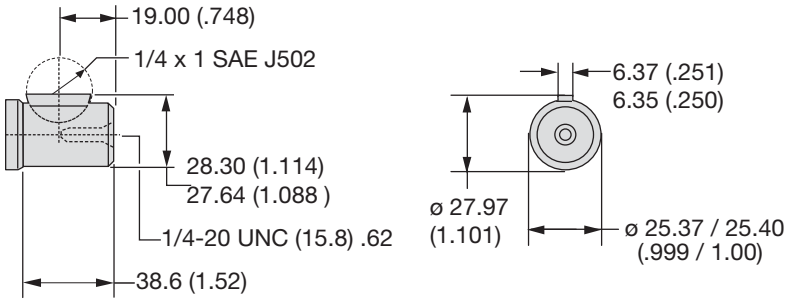

Code: 11

1" 6B Spline

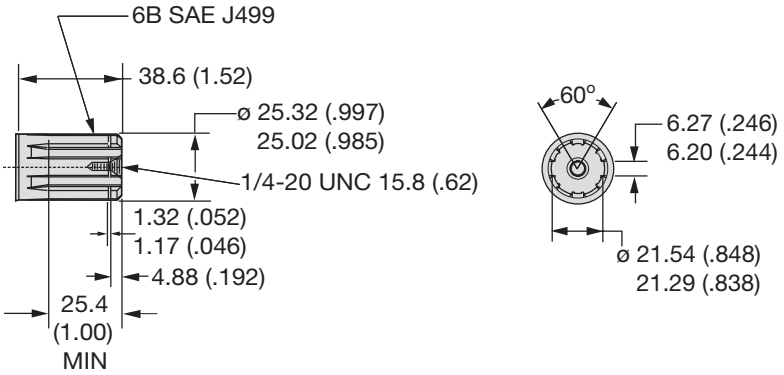

Code: 13

Long 1" Keyed

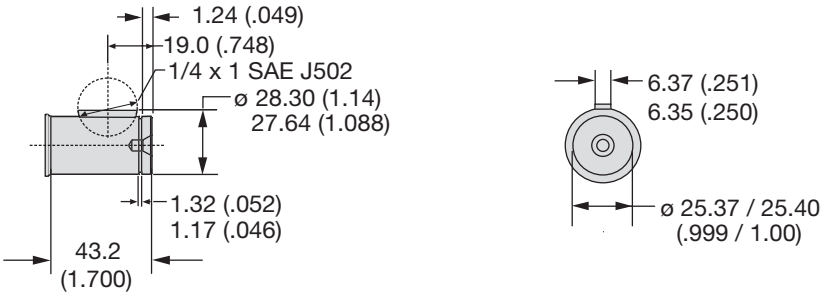

English equivalents for metric specifications are shown in ( ).

Code: 21

Corrosion Resistant

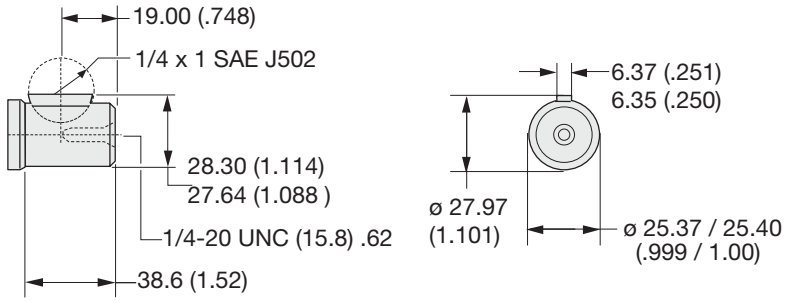

Code: 26

25mm Keyed with 8mm Key

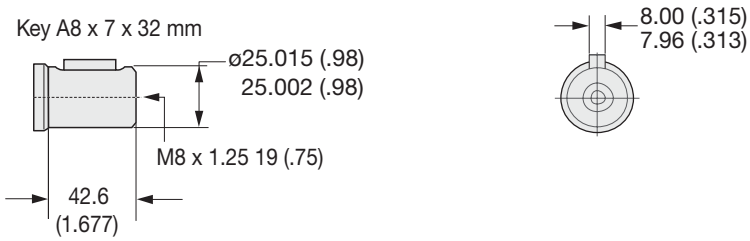

English equivalents for metric specifications are shown in ( ).

15 Displacements **15 Schluckvolumen** **15 Cylindrée** **15 Despazamientos**		(2.2 – 24.0 in³/rev) **36 . . . 390 cm³/rev**
	Cont	**Int**
Maximum Pressure **Eingangsdruck** **Chaute de pression max.** **Presion Maxima**	(1800 psid) **. . .125 bar**	(2400 psid) **. . .165 bar**
Maximum Oil Flow **Schluckstrom** **Débit d'huile** **Caudal Maximo de Aceite**		(15 gpm) **. . . 57 lpm**
Maximum Speed **Drehzahl** **Vitesse de rotation** **Velocidad Maxima**		(932 rpm) **932 rpm**
	Cont	**Int**
Maximum Torque **Max Drehmoment** **Couple Maxi** **Torque Maximo**	(3897 lb in) **440 Nm**	(4783 lb in) **540 Nm**
Maximum Side Load at Key **Seitenlast** **Charges latèrales** **Carga Maxima Lateral**		(1100 lb) **. . . 4900 N**

A Light to Medium Duty Low Speed, High Torque Motor

This light to medium duty motor incorporates all the features of heavy duty motors. Design features include a high pressure shaft seal so external drains are never required, roller vane technology for automatic wear compensation, and full flow internal cooling and flushing. This is a very economical motor for most light to medium duty applications.

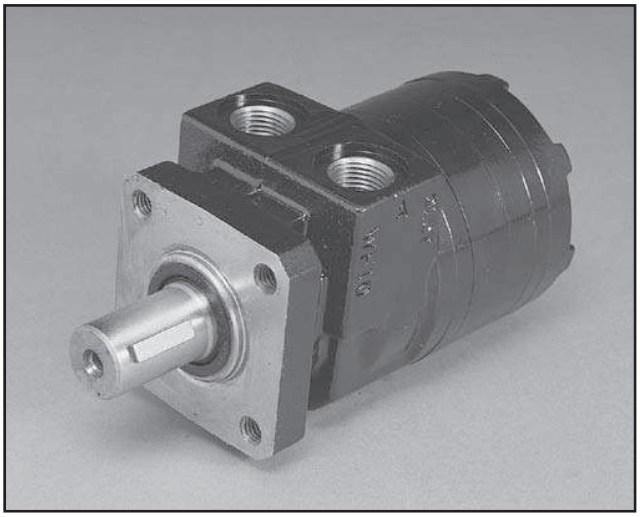

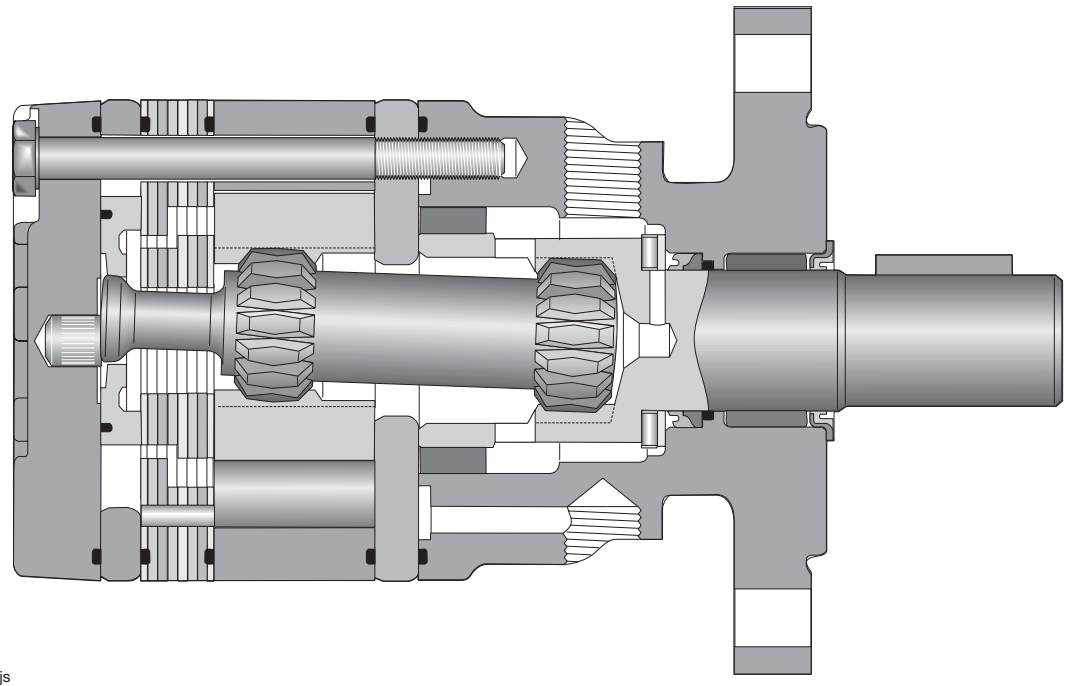

TB

Series

XXXX

Displacement
Schluckvolumen
Cylindrée
Desplazamiento

Code	cm³/U cm³/tr cm³/giro	in³/rev
0036	36 /	2.2
0045	41 /	2.5
0050	49 /	3.0
0065	65 /	4.0
0080	82 /	5.0
0100	98 /	6.0
0130	130 /	8.0
0165	163 /	10.0
0195	195 /	11.9
0230	228 /	13.9
0260	260 /	15.9
0295	293 /	17.9
0330	328 /	20.0
0365	370 /	22.6
0390	392 /	24.0

X

Mounting
Gehäuse
Carter
Montaje

Code	Mounting
A	SAE "A" 2 Bolt 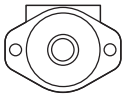
F	4 Bolt w/3/8-16 UNC 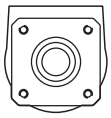
M	Magneto
C	SAE "A" 2 Bolt, Long Pilot 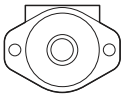
B	SAE "B" 2 Bolt 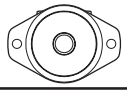

X

Ports
Anschluß
Plan de raccordement
Lumbreras

Code	Ports
M	5/16-18 UNC Manifold
P	1/2-14 NPTF
S	7/8-14 SAE
W	G 1/2 BSPP 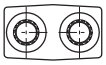

Rear Ports
Endanschluß
Alimentazione Laterale
Orifices arriér

Code	Rear Ports
R	3/4-16 SAE O-ring Axial 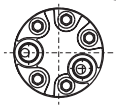
Y	G 1/2 BSPP Axial 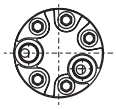

For other available options, see pages 102–103.

XX

Shaft
Welle
Arbre
Eje

Code	Shaft
09	1" Straight w/0.38" Crosshole 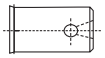
10	1" Keyed
11	1" 6B Spline
13	Long 1" Keyed
21	1" Keyed; Corrosion Resistant
25	1" Tapered 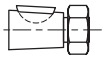
26	25mm Keyed w/ 8mm Key
28	7/8" 13 Tooth Spline

0

Rotation
Drehrichtung
Direction de rotation
Rotacion

Code	Rotation
0	Standard
1	Reverse Timed Manifold 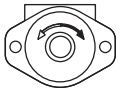

Code	Rear Port Rotation
0	Standard 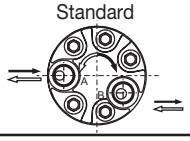
1	Reverse Timed Manifold 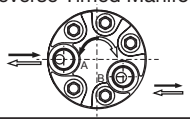

Rotation viewed from shaft end.

XXXX

Options
Opciones

Code	Options
AAAA	Black Paint
AAAB	No Paint
AAAC	Double Paint
AAAF	Castle Nut, Black Paint
AABP	Castle Nut, No Paint
AAAG	Viton Seals, Black Paint
AAAH	Viton Seals, No Paint
AAAJ	Vespel Commutator Seal, Black Paint
AAFG	Vespel Commutator Seal, No Paint
AABJ*	Free Running Rotorset, Black Paint
AABK*	Free Running Rotorset, No Paint

*Not applicable to TB0365 or TB0390 displacements

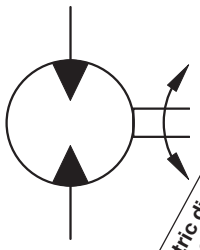

Motor Series TB	Geometric displacement / Geom. Schluckvolumen / Cylindrée / Despazamientos	Max. speed @ Max. intermittent flow / Max. Drehzahl Intermittierender Betrieb: / Vitesse de rotation maxi / Velocidad maxima a caudal intermitente maximo	Max. oil flow / Max. Schluckstrom / Débit d'huile maxi / Caudal Maximo de Aceite		Max. Differential Pressure / Max. Druckgefälle / Chute de pression maxi / Presion diferencial maxima		Max. supply pressure / Max. Eingangsdruck / Pression maxi entrée / Presion maxima de alimentacion	Max. torque / Max. Drehmoment / Couple maxi / Torque Maximo		Max. performance / Max. Leistungabgabe / Puissance de sortie maxi / Maximo redinmiento	Min. starting torque / Min. Anlaufmoment / Couple min. fourni au dé manrage / Torque minimo de arranque	
	cm³/rev in³/rev	rev/min	***cont / int**** **l/min** g/min		***cont / int**** **bar** psid		***max*** **bar** psig	***cont / int**** **Nm** lb-in		***max*** **KW** HP	***cont / int**** **Nm** lb-in	
TB 0036	**36** 2.2	932	34 9	34 9	**125** 1800	**165** 2400	**190** 2750	**48** 427	**67** 596	**6.6** 8.8	**44** 385	**50** 440
TB 0045	**41** 2.5	805	34 9	34 9	**125** 1800	**165** 2400	**190** 2750	**64** 526	**88** 731	**7.2** 9.7	**39** 341	**52** 461
TB 0050	**49** 3.0	678	34 9	34 9	**125** 1800	**165** 2400	**190** 2750	**78** 693	**107** 946	**7.5** 10.1	**36** 319	**70** 619
TB 0065	**65** 4.0	511	34 9	34 9	**125** 1800	**165** 2400	**190** 2750	**107** 946	**145** 1284	**7.8** 10.4	**66** 582	**99** 977
TB 0080	**82** 5.0	409	34 9	34 9	**125** 1800	**165** 2400	**190** 2750	**135** 1193	**184** 1624	**7.8** 10.5	**92** 816	**139** 1226
TB 0100	**98** 6.0	454	45 12	45 12	**125** 1800	**165** 2400	**190** 2750	**159** 1411	**217** 1917	**10.2** 13.8	**119** 1050	**158** 1400
TB 0130	**130** 8.0	430	45 12	57 15	**125** 1800	**165** 2400	**190** 2750	**220** 1951	**297** 2632	**13.4** 18.0	**167** 1482	**229** 2024
TB 0165	**163** 10.0	343	45 12	57 15	**125** 1800	**155** 2250	**190** 2750	**273** 2418	**346** 3062	**12.4** 16.7	**199** 1760	**263** 2331
TB 0195	**195** 11.9	287	45 12	57 15	**125** 1800	**145** 2100	**190** 2750	**340** 3011	**400** 3537	**12.0** 16.1	**270** 2388	**325** 2872
TB 0230	**228** 13.9	246	45 12	57 15	**103** 1500	**138** 2000	**190** 2750	**316** 2797	**427** 3782	**11.0** 14.8	**261** 2354	**353** 3121
TB 0260	**260** 15.9	216	45 12	57 15	**100** 1450	**131** 1900	**190** 2750	**350** 3096	**465** 4117	**10.5** 14.1	**291** 2573	**395** 3498
TB 0295	**293** 17.9	191	45 12	57 15	**97** 1400	**125** 1800	**190** 2750	**383** 3391	**499** 4415	**10.0** 13.4	**308** 2724	**400** 3544
TB 0330	**328** 20.0	171	45 12	57 15	**93** 1350	**114** 1650	**190** 2750	**413** 3657	**509** 4505	**9.1** 12.2	**332** 2942	**406** 3590
TB 0365	**370** 22.6	151	45 12	57 15	**86** 1250	**105** 1525	**190** 2750	**440** 3897	**540** 4783	**8.7** 11.6	**372** 3296	**454** 4021
TB 0390	**392** 24.0	143	45 12	57 15	**83** 1200	**100** 1450	**190** 2750	**428** 3792	**525** 4642	**7.8** 10.5	**339** 3003	**434** 3845

Performance data based on testing using 10W40 oil with a viscosity of 43,1 cSt. (200 SUS) at 54° C (130° F.). Performance data is typical. Actual data may vary slightly from one production motor to another.

Les donnees sur les performances sont basees sur des tests utilisant de l'huile 10W40 d'une viscosite de 200 SUS a 54°C (130°F). Ces donnees correspondent a des situations typiques. Les donnees reelles peuvent varier legerement d'un moteur de production a l'autre.

Leistungsdaten sind gemessen mit SAE 10W40 bei einer Viskositaet von 43,1 Cst bei 54°C. Geringfuegige Abweichungen von den Katalogdaten sind moeglich.

Datos tecnicos obtenidos con aceite 10W40 de 200 SUS de viscosidad a 54°C (130°F). Los datos proporcionados son valores tipcos. Los valores exactos reales podrian tener una pequena variacion entre distintos motores.

* Intermittent operation rating applies to 10% of every minute.
Intermittierende Werte maximal 10% von jeder Betriebsminute.
Fonctionnement interm. 10% max. de chaque minute d`utilisation.
Capacidad de funcionamiento intermitente valida para 10% por cada minuto.

002 TB.indd, js

Parker Hannifin Corporation
Hydraulic Pump/Motor Division
Greeneville, Tennessee, USA

TB 0036

2.2 cu in / rev PRESSURE (PSID)

Flow (GPM)	500	1000	1500	1800	2000	2400
.5	108 **45**	223 **37**	343 **26**	418 **19**	468 **15**	570 **8**
1	114 **97**	234 **88**	357 **77**	431 **70**	481 **66**	581 **57**
2	112 **202**	235 **191**	361 **179**	440 **172**	492 **168**	598 **158**
3	113 **307**	241 **295**	370 **282**	450 **274**	503 **269**	610 **258**
4	109 **411**	241 **398**	373 **384**	455 **376**	509 **370**	620 **358**
5	104 **515**	237 **501**	371 **486**	453 **477**	509 **471**	621 **459**
7	87 **724**	225 **708**	360 **691**	443 **681**	498 **674**	613 **660**
9	71 **932**	208 **915**	344 **896**	427 **884**	483 **876**	598 **860**

TORQUE (LB IN) 427
SPEED (RPM) 884

36 cc / rev

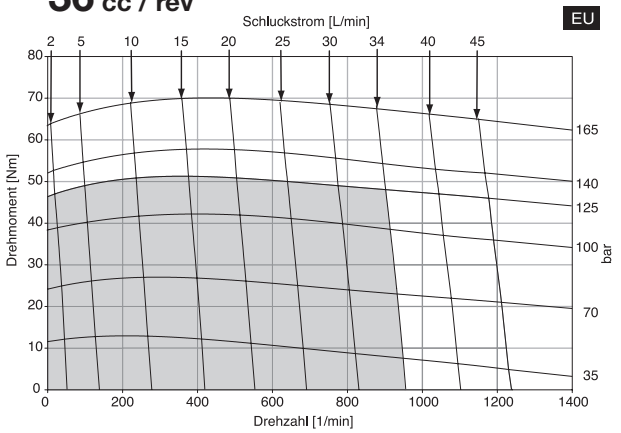

TB 0045

2.5 cu in / rev PRESSURE (PSID)

Flow (GPM)	500	1000	1500	1800	2000	2400
.5	116 **31**	263 **17**				
1	124 **76**	276 **61**	427 **43**	518 **36**	579 **29**	706 **18**
2	134 **167**	294 **149**	453 **131**	547 **121**	609 **113**	723 **97**
3	132 **256**	293 **239**	455 **220**	553 **210**	617 **200**	746 **183**
4	132 **344**	296 **326**	465 **307**	567 **295**	635 **285**	769 **268**
5	128 **433**	294 **414**	465 **393**	569 **380**	639 **370**	779 **352**
7	117 **609**	284 **589**	458 **566**	564 **551**	635 **540**	779 **520**
9	107 **785**	275 **764**	449 **739**	555 **722**	627 **710**	770 **689**

TORQUE (LB IN) 555
SPEED (RPM) 722

41 cc / rev

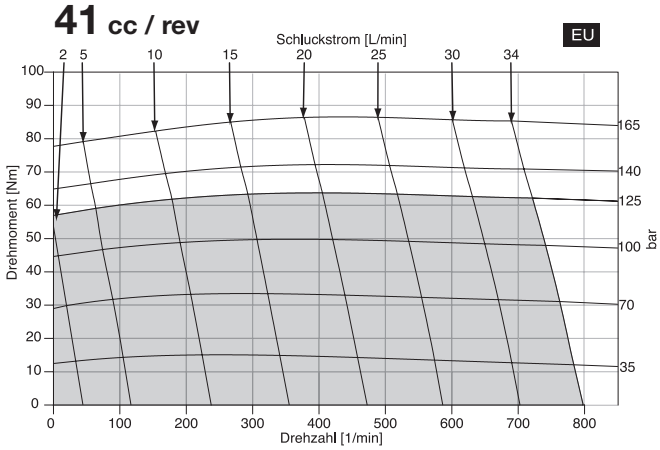

Cont. Int.

Intermittent operation rating applies to 10% of every minute.

Fonctionnement interm. 10% max. de chaque minute d`utilisation.

Performance data based on testing using 10W40 oil with a viscosity of 200 SUS at 54° C (130° F.). Performance data is typical. Actual data may vary slightly from one production motor to another.

Les donnees sur les performances sont basees sur des tests utilisant de l'huile 10W40 d'une viscosite de 200 SUS a 54°C (130°F). Ces donnees correspondent a des situations typiques. Les donnees reelles peuvent varier legerement d'un moteur de production a l'autre.

Intermittierende Werte maximal 10% von jeder Betriebsminute.

Capacidad de funcionamiento intermitente valida para 6 segundos por cada minuto.

Leistungsdaten sind gemessen mit SAE 10W40 bei einer Viskositaet von 43,1 Cst bei 54°C. Geringfuegige Abweichungen von den Katalogdaten sind moeglich.

Datos tecnicos obtenidos con aceite 10W40 de 200 SUS de viscosidad a 54°C (130°F). Los datos proporcionados son valores tipcos. Los valores exactos reales podrian tener una pequena variacion entre distintos motores.

TB 0050

3.0 cu in / rev

Flow (GPM)	PRESSURE (PSID) 500	1000	1500	1800	2000	2400
.5	144 **26**	319 **13**				
1	154 **65**	338 **50**	518 **35**	625 **28**	697 **21**	840 **9**
2	163 **141**	360 **127**	555 **110**	671 **102**	746 **94**	875 **80**
3	161 **218**	358 **203**	557 **186**	675 **177**	753 **169**	907 **153**
4	160 **295**	361 **279**	567 **261**	691 **251**	774 **243**	931 **227**
5	155 **371**	358 **355**	566 **337**	693 **326**	777 **317**	946 **301**
7	143 **525**	346 **507**	558 **487**	686 **474**	772 **466**	946 **448**
9	133 **678**	336 **658**	546 **638**	675 **623**	761 **614**	936 **595**

TORQUE (LB IN) 675
SPEED (RPM) 623

49 cc / rev

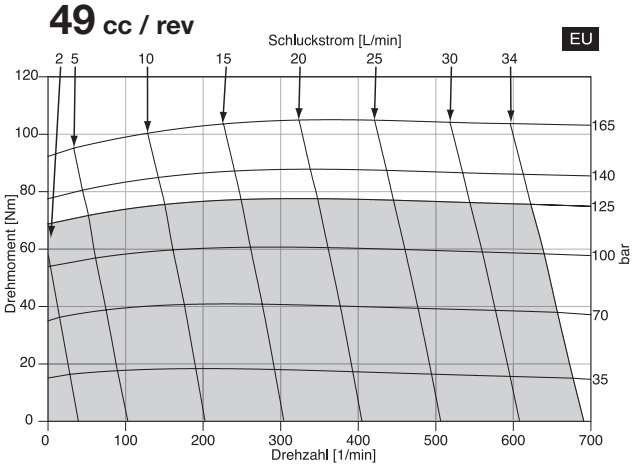

TB 0065

4.0 cu in / rev

Flow (GPM)	PRESSURE (PSID) 500	1000	1500	1800	2000	2400
.5	213 **22**	459 **14**	709 **6**			
1	224 **51**	479 **42**	734 **34**	887 **29**	989 **25**	1193 **17**
2	233 **108**	500 **99**	767 **90**	926 **85**	1033 **81**	1228 **71**
3	231 **166**	498 **156**	769 **147**	932 **141**	1039 **136**	1252 **126**
4	229 **224**	501 **214**	778 **203**	945 **197**	1056 **192**	1272 **181**
5	223 **281**	497 **271**	777 **260**	946 **252**	1058 **247**	1284 **237**
7	206 **396**	481 **385**	764 **372**	936 **364**	1050 **359**	1280 **347**
9	192 **511**	467 **499**	749 **485**	920 **476**	1035 **470**	1267 **457**

TORQUE (LB IN) 920
SPEED (RPM) 476

65 cc / rev

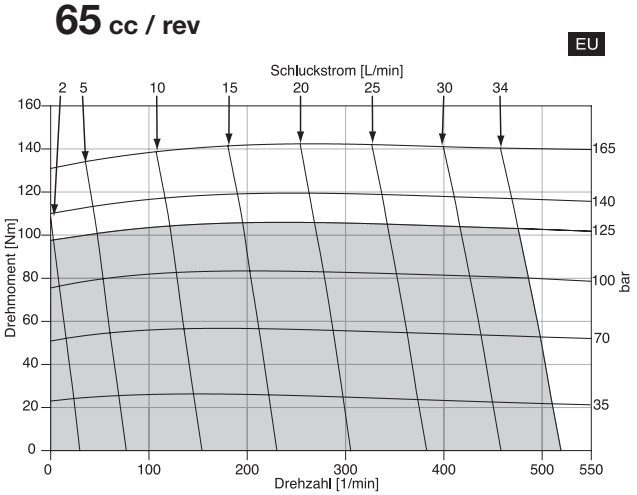

Cont. Int.

Intermittent operation rating applies to 10% of every minute.

Fonctionnement interm. 10% max. de chaque minute d`utilisation.

Performance data based on testing using 10W40 oil with a viscosity of 200 SUS at 54° C (130° F.). Performance data is typical. Actual data may vary slightly from one production motor to another.

Les donnees sur les performances sont basees sur des tests utilisant de l'huile 10W40 d'une viscosite de 200 SUS a 54°C (130°F). Ces donnees correspondent a des situations typiques. Les donnees reelles peuvent varier legerement d'un moteur de production a l'autre.

Intermittierende Werte maximal 10% von jeder Betriebsminute.

Capacidad de funcionamiento intermitente valida para 6 segundos por cada minuto.

Leistungsdaten sind gemessen mit SAE 10W40 bei einer Viskositaet von 43,1 Cst bei 54°C. Geringfuegige Abweichungen von den Katalogdaten sind moeglich.

Datos tecnicos obtenidos con aceite 10W40 de 200 SUS de viscosidad a 54°C (130°F). Los datos proporcionados son valores tipcos. Los valores exactos reales podrian tener una pequena variacion entre distintos motores.

TB 0080

5.0 cu in / rev PRESSURE (PSID)

Flow (GPM)	500	1000	1500	1800	2000	2400
.5	256 **17**	562 **10**	877 **4**			
1	269 **40**	585 **33**	905 **26**	1097 **21**	1226 **18**	1487 **10**
2	285 **86**	616 **78**	950 **70**	1150 **66**	1283 **62**	1527 **53**
3	285 **132**	619 **124**	959 **116**	1163 **110**	1298 **106**	1566 **97**
4	286 **178**	628 **170**	976 **161**	1187 **155**	1327 **151**	1600 **141**
5	282 **225**	627 **216**	979 **206**	1193 **200**	1335 **196**	1621 **185**
7	267 **317**	615 **307**	972 **296**	1189 **290**	1333 **285**	1624 **274**
9	252 **409**	600 **398**	956 **387**	1173 **379**	1318 **374**	1609 **362**

TORQUE (LB IN) 1173
SPEED (RPM) 379

500 1000 1500 1800
2000 2400 **82 cc / rev**

EU

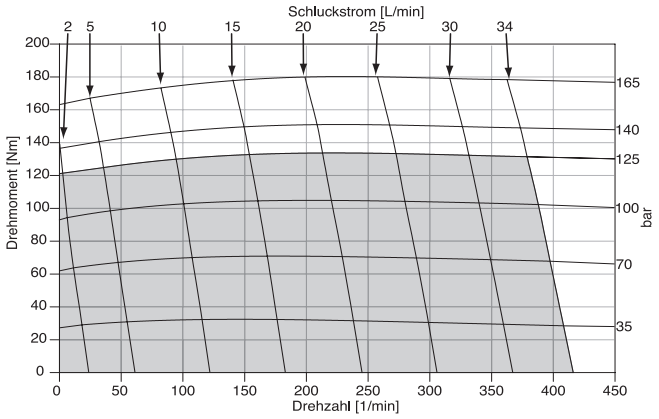

TB 0100

6.0 cu in / rev PRESSURE (PSID)

Flow (GPM)	500	1000	1500	1800	2000	2400
.5	310 **16**	669 **13**	1035 **9**	1258 **7**	1408 **5**	
1	330 **35**	697 **32**	1073 **27**	1298 **25**	1448 **23**	1737 **18**
2	346 **73**	732 **69**	1121 **64**	1353 **61**	1509 **59**	1800 **53**
3	345 **111**	735 **107**	1134 **102**	1371 **98**	1530 **95**	1844 **89**
4	347 **149**	747 **144**	1158 **139**	1403 **135**	1569 **132**	1885 **126**
5	343 **187**	750 **182**	1164 **176**	1411 **172**	1578 **169**	1909 **162**
7	327 **264**	738 **257**	1159 **250**	1411 **246**	1580 **242**	1917 **235**
9	301 **340**	715 **333**	1139 **325**	1395 **319**	1566 **316**	1909 **307**
12	257 **454**	669 **446**	1091 **437**	1347 **430**	1518 **426**	1863 **417**

TORQUE (LB IN) 1347
SPEED (RPM) 430

98 cc / rev

EU

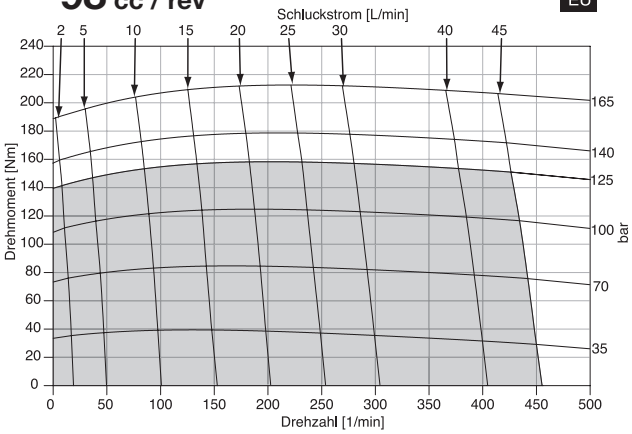

Cont. Int.

Intermittent operation rating applies to 10% of every minute.

Fonctionnement interm. 10% max. de chaque minute d`utilisation.

Performance data based on testing using 10W40 oil with a viscosity of 200 SUS at 54° C (130° F.). Performance data is typical. Actual data may vary slightly from one production motor to another.

Les donnees sur les performances sont basees sur des tests utilisant de l'huile 10W40 d'une viscosite de 200 SUS a 54°C (130°F). Ces donnees correspondent a des situations typiques. Les donnees reelles peuvent varier legerement d'un moteur de production a l'autre.

Intermittierende Werte maximal 10% von jeder Betriebsminute.

Capacidad de funcionamiento intermitente valida para 6 segundos por cada minuto.

Leistungsdaten sind gemessen mit SAE 10W40 bei einer Viskositaet von 43,1 Cst bei 54°C. Geringfuegige Abweichungen von den Katalogdaten sind moeglich.

Datos tecnicos obtenidos con aceite 10W40 de 200 SUS de viscosidad a 54°C (130°F). Los datos proporcionados son valores tipcos. Los valores exactos reales podrian tener una pequena variacion entre distintos motores.

TB 0130

8.0 cu in / rev PRESSURE (PSID)

Flow (GPM)	500	1000	1500	1800	2000	2400
.5	446 **12**	955 **10**	1479 **7**	1797 **5**	2011 **3**	
1	465 **27**	989 **24**	1515 **21**	1831 **19**	2043 **17**	2469 **13**
2	481 **55**	1023 **52**	1571 **49**	1901 **46**	2120 **44**	2520 **40**
3	482 **84**	1029 **81**	1581 **77**	1912 **74**	2133 **72**	2570 **67**
4	483 **113**	1042 **109**	1605 **105**	1940 **102**	2164 **100**	2608 **95**
5	478 **142**	1041 **138**	1610 **133**	1951 **130**	2179 **128**	2628 **122**
7	450 **199**	1019 **195**	1597 **190**	1943 **186**	2174 **184**	2632 **177**
9	414 **257**	984 **252**	1563 **246**	1911 **242**	2145 **239**	2612 **233**
12	335 **343**	907 **338**	1489 **331**	1842 **327**	2076 **323**	2550 **316**
15	253 **430**	818 **424**	1393 **416**	1740 **411**	1974 **407**	2443 **399**

TORQUE (LB IN) 2612
SPEED (RPM) 233

130 cc / rev EU

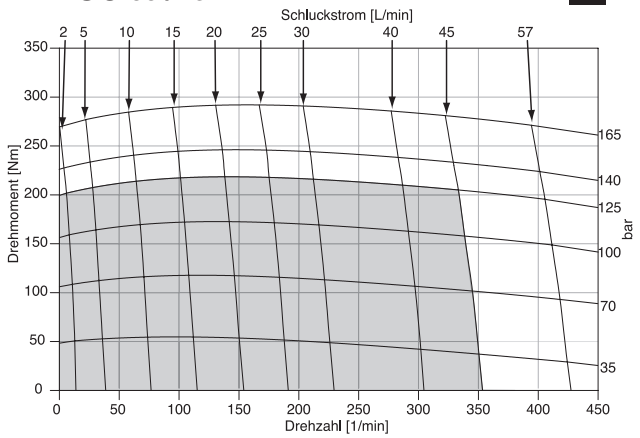

TB 0165

10.0 cu in / rev PRESSURE (PSID)

Flow (GPM)	500	1000	1500	1800	2250
.5	529 **9**	1137 **7**	1769 **4**	2149 **3**	
1	556 **21**	1181 **18**	1819 **15**	2201 **13**	2776 **9**
2	580 **44**	1238 **40**	1909 **37**	2314 **34**	2876 **29**
3	584 **67**	1248 **63**	1926 **59**	2332 **56**	2934 **51**
4	592 **90**	1276 **86**	1968 **82**	2382 **78**	3000 **73**
5	588 **113**	1283 **109**	1988 **104**	2412 **101**	3046 **95**
7	560 **159**	1268 **154**	1987 **149**	2418 **145**	3062 **139**
9	517 **205**	1230 **200**	1957 **194**	2393 **190**	3047 **183**
12	425 **274**	1141 **268**	1874 **262**	2317 **257**	2980 **250**
15	321 **343**	1033 **337**	1759 **330**	2197 **325**	2859 **317**

TORQUE (LB IN) 3047
SPEED (RPM) 183

163 cc / rev EU

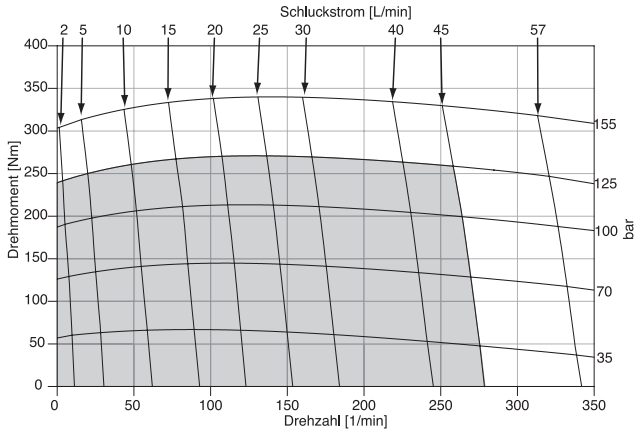

Cont. Int.

Intermittent operation rating applies to 10% of every minute.

Fonctionnement interm. 10% max. de chaque minute d`utilisation.

Performance data based on testing using 10W40 oil with a viscosity of 200 SUS at 54° C (130° F.). Performance data is typical. Actual data may vary slightly from one production motor to another.

Les donnees sur les performances sont basees sur des tests utilisant de l'huile 10W40 d'une viscosite de 200 SUS a 54°C (130°F). Ces donnees correspondent a des situations typiques. Les donnees reelles peuvent varier legerement d'un moteur de production a l'autre.

Intermittierende Werte maximal 10% von jeder Betriebsminute.

Capacidad de funcionamiento intermitente valida para 6 segundos por cada minuto.

Leistungsdaten sind gemessen mit SAE 10W40 bei einer Viskositaet von 43,1 Cst bei 54°C. Geringfuegige Abweichungen von den Katalogdaten sind moeglich.

Datos tecnicos obtenidos con aceite 10W40 de 200 SUS de viscosidad a 54°C (130°F). Los datos proporcionados son valores tipcos. Los valores exactos reales podrian tener una pequena variacion entre distintos motores.

TB 0195

11.9 cu in / rev PRESSURE (PSID)

	500	1000	1500	1800	2100
.5	688 **9**	1490 **8**	2329 **7**	2841 **6**	3353 **5**
1	718 **18**	1537 **17**	2380 **16**	2890 **15**	3373 **14**
2	746 **38**	1580 **36**	2443 **35**	2962 **33**	3442 **32**
3	745 **57**	1592 **55**	2452 **53**	2973 **52**	3494 **50**
4	746 **76**	1607 **74**	2482 **72**	3008 **71**	3528 **69**
5	737 **95**	1601 **93**	2480 **91**	3011 **89**	3537 **87**
7	697 **134**	1572 **131**	2455 **129**	2986 **127**	3514 **125**
9	641 **172**	1510 **169**	2398 **167**	2934 **164**	3472 **162**
12	530 **230**	1391 **227**	2283 **223**	2821 **221**	3360 **217**
15	399 **287**	1252 **284**	2130 **280**	2662 **277**	3200 **273**

Flow (GPM)

TORQUE (LB IN) 3472
SPEED (RPM) 162

195 cc / rev

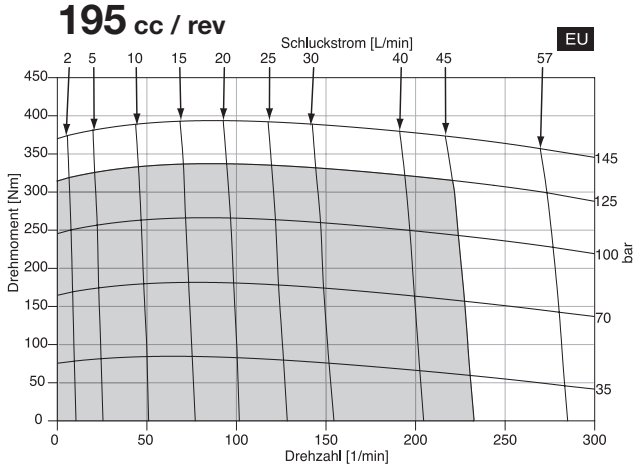

TB 0230

13.9 cu in / rev PRESSURE (PSID)

	500	1000	1500	2000
.5	796 **8**	1704 **7**	2640 **6**	3597 **5**
1	818 **16**	1733 **15**	2681 **14**	3623 **13**
2	840 **32**	1775 **31**	2732 **30**	3700 **28**
3	845 **49**	1789 **47**	2750 **46**	3725 **43**
4	848 **65**	1815 **64**	2789 **62**	3762 **59**
5	840 **82**	1813 **80**	2797 **78**	3782 **74**
7	799 **114**	1790 **112**	2785 **110**	3776 **106**
9	741 **147**	1738 **145**	2738 **142**	3741 **138**
12	613 **197**	1615 **194**	2626 **190**	3645 **185**
15	473 **246**	1531 **243**	2457 **239**	3467 **233**

Flow (GPM)

TORQUE (LB IN) 3776
SPEED (RPM) 106

228 cc / rev

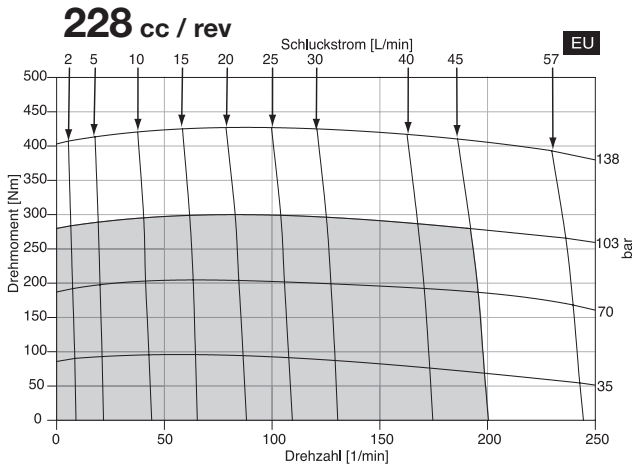

Cont. Int.

Intermittent operation rating applies to 10% of every minute.

Fonctionnement interm. 10% max. de chaque minute d`utilisation.

Performance data based on testing using 10W40 oil with a viscosity of 200 SUS at 54° C (130° F.). Performance data is typical. Actual data may vary slightly from one production motor to another.

Les donnees sur les performances sont basees sur des tests utilisant de l'huile 10W40 d'une viscosite de 200 SUS a 54°C (130°F). Ces donnees correspondent a des situations typiques. Les donnees reelles peuvent varier legerement d'un moteur de production a l'autre.

Intermittierende Werte maximal 10% von jeder Betriebsminute.

Capacidad de funcionamiento intermitente valida para 6 segundos por cada minuto.

Leistungsdaten sind gemessen mit SAE 10W40 bei einer Viskositaet von 43,1 Cst bei 54°C. Geringfuegige Abweichungen von den Katalogdaten sind moeglich.

Datos tecnicos obtenidos con aceite 10W40 de 200 SUS de viscosidad a 54°C (130°F). Los datos proporcionados son valores tipcos. Los valores exactos reales podrian tener una pequena variacion entre distintos motores.

TB 0260

15.9 cu in / rev PRESSURE (PSID)

Flow (GPM)	500	1000	1450	1900
.5	906 **7**	1947 **6**	2910 **5**	3896 **4**
1	932 **14**	1984 **13**	2964 **12**	3919 **11**
2	958 **28**	2032 **27**	3025 **26**	4000 **24**
3	961 **43**	2047 **41**	3045 **40**	4052 **38**
4	963 **57**	2074 **56**	3086 **54**	4098 **52**
5	954 **71**	2074 **70**	3096 **68**	4117 **65**
7	909 **100**	2049 **99**	3084 **96**	4112 **93**
9	844 **129**	1991 **127**	3032 **125**	4070 **121**
12	696 **172**	1851 **170**	2903 **167**	3953 **162**
15	540 **216**	1683 **213**	2711 **209**	3753 **204**

TORQUE (LB IN) 4112
SPEED (RPM) 93

260 cc / rev

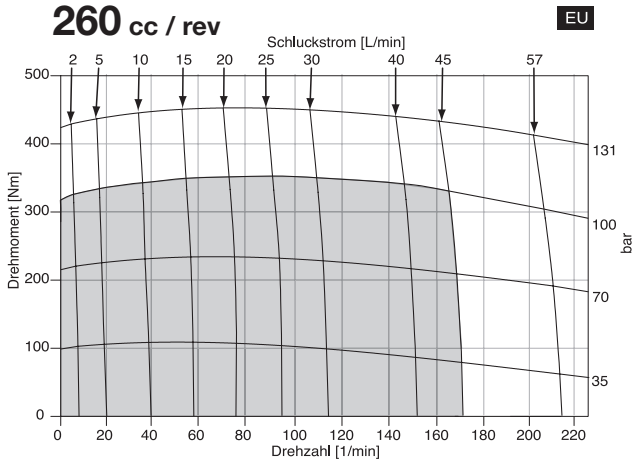

TB 0295

17.9 cu in / rev PRESSURE (PSID)

Flow (GPM)	500	1000	1400	1800
.5	1039 **6**	2229 **5**	3208 **4**	4200 **3**
1	1069 **12**	2281 **11**	3265 **10**	4248 **9**
2	1098 **25**	2332 **24**	3337 **22**	4290 **20**
3	1100 **38**	2344 **36**	3353 **35**	4356 **32**
4	1098 **50**	2366 **49**	3386 **47**	4398 **44**
5	1086 **63**	2361 **61**	3391 **60**	4415 **57**
7	1034 **89**	2325 **87**	3361 **85**	4394 **81**
9	955 **114**	2250 **112**	3295 **109**	4337 **106**
12	792 **153**	2085 **150**	3141 **147**	4194 **142**
15	606 **191**	1879 **188**	2908 **185**	3955 **180**

TORQUE (LB IN) 4337
SPEED (RPM) 106

293 cc / rev

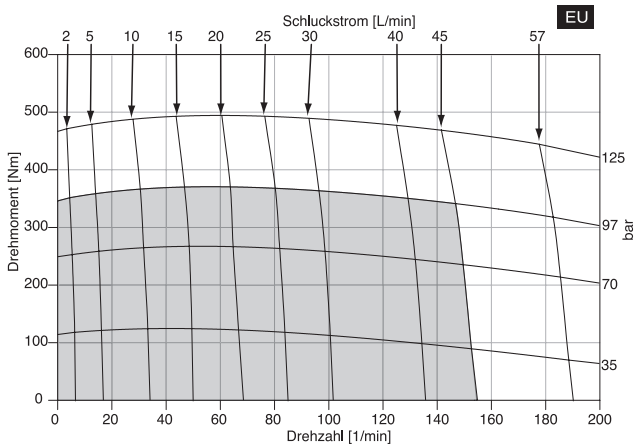

Cont. Int.

Intermittent operation rating applies to 10% of every minute.

Fonctionnement interm. 10% max. de chaque minute d`utilisation.

Performance data based on testing using 10W40 oil with a viscosity of 200 SUS at 54° C (130° F.). Performance data is typical. Actual data may vary slightly from one production motor to another.

Les donnees sur les performances sont basees sur des tests utilisant de l'huile 10W40 d'une viscosite de 200 SUS a 54°C (130°F). Ces donnees correspondent a des situations typiques. Les donnees reelles peuvent varier legerement d'un moteur de production a l'autre.

Intermittierende Werte maximal 10% von jeder Betriebsminute.

Capacidad de funcionamiento intermitente valida para 6 segundos por cada minuto.

Leistungsdaten sind gemessen mit SAE 10W40 bei einer Viskositaet von 43,1 Cst bei 54°C. Geringfuegige Abweichungen von den Katalogdaten sind moeglich.

Datos tecnicos obtenidos con aceite 10W40 de 200 SUS de viscosidad a 54°C (130°F). Los datos proporcionados son valores tipcos. Los valores exactos reales podrian tener una pequena variacion entre distintos motores.

TB 0330

20.0 cu in / rev PRESSURE (PSID)

Flow (GPM)	500	1000	1350	1650
.5	1192 **5**	2498 **4**	3425 **4**	4227 **3**
1	1224 **11**	2555 **10**	3495 **9**	4250 **8**
2	1255 **22**	2620 **21**	3581 **20**	4350 **18**
3	1259 **34**	2633 **32**	3597 **31**	4424 **29**
4	1258 **45**	2666 **43**	3645 **42**	4480 **40**
5	1243 **56**	2665 **55**	3657 **53**	4505 **51**
7	1186 **79**	2627 **77**	3634 **75**	4492 **73**
9	1092 **102**	2544 **100**	3563 **97**	4431 **94**
12	905 **137**	2363 **134**	3391 **131**	4269 **127**
15	692 **171**	2129 **168**	3136 **165**	4001 **161**

TORQUE (LB IN) 4431
SPEED (RPM) 94

328 cc / rev

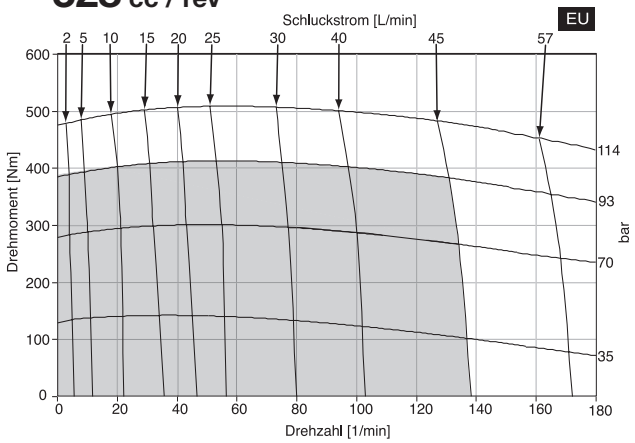

TB 0365

22.6 cu in / rev PRESSURE (PSID)

Flow (GPM)	500	1000	1250	1525
.5	1393 **5**	2942 **4**	3734 **4**	4617 **3**
1	1444 **10**	3005 **9**	3796 **9**	4672 **8**
2	1494 **20**	3090 **19**	3890 **18**	4710 **17**
3	1485 **30**	3082 **29**	3883 **28**	4765 **27**
4	1477 **40**	3089 **39**	3897 **38**	4783 **36**
5	1452 **50**	3075 **49**	3887 **48**	4775 **46**
7	1371 **70**	3009 **69**	3826 **67**	4719 **65**
9	1260 **90**	2899 **89**	3721 **87**	4621 **85**
12	1002 **121**	2658 **119**	3488 **117**	4393 **115**
15	700 **151**	2355 **149**	3190 **147**	4095 **144**

TORQUE (LB IN) 4621
SPEED (RPM) 85

370 cc / rev

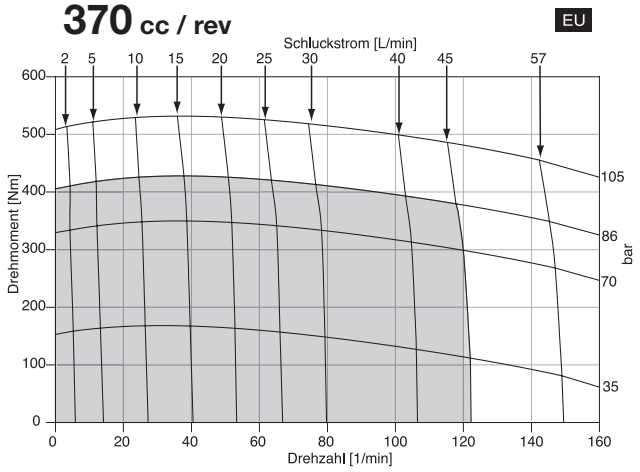

Cont. Int.

Intermittent operation rating applies to 10% of every minute.

Fonctionnement interm. 10% max. de chaque minute d`utilisation.

Performance data based on testing using 10W40 oil with a viscosity of 200 SUS at 54° C (130° F.). Performance data is typical. Actual data may vary slightly from one production motor to another.

Les donnees sur les performances sont basees sur des tests utilisant de l'huile 10W40 d'une viscosite de 200 SUS a 54°C (130°F). Ces donnees correspondent a des situations typiques. Les donnees reelles peuvent varier legerement d'un moteur de production a l'autre.

Intermittierende Werte maximal 10% von jeder Betriebsminute.

Capacidad de funcionamiento intermitente valida para 6 segundos por cada minuto.

Leistungsdaten sind gemessen mit SAE 10W40 bei einer Viskositaet von 43,1 Cst bei 54°C. Geringfuegige Abweichungen von den Katalogdaten sind moeglich.

Datos tecnicos obtenidos con aceite 10W40 de 200 SUS de viscosidad a 54°C (130°F). Los datos proporcionados son valores tipcos. Los valores exactos reales podrian tener una pequena variacion entre distintos motores.

TB 0390

24.0 cu in / rev PRESSURE (PSID)

	500	1000	1200	1450
.5	1309 **4**	2885 **3**	3534 **2**	4359 **2**
1	1368 **9**	2948 **8**	3589 **7**	4394 **6**
2	1417 **18**	3028 **17**	3683 **16**	4460 **15**
3	1427 **28**	3058 **26**	3714 **26**	4540 **24**
4	1443 **37**	3102 **36**	3764 **35**	4595 **34**
5	1439 **47**	3120 **45**	3790 **45**	4630 **43**
7	1392 **66**	3110 **65**	3792 **64**	4642 **62**
9	1297 **85**	3040 **84**	3732 **83**	4597 **81**
12	1087 **114**	2835 **112**	3541 **111**	4418 **110**
15	831 **143**	2571 **141**	3272 **140**	4145 **138**

Flow (GPM)

TORQUE (LB IN) 4597
SPEED (RPM) 81

392 cc / rev

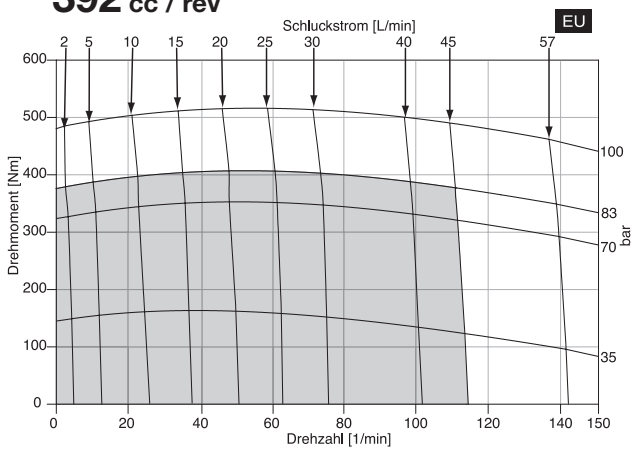

Cont. Int.

Intermittent operation rating applies to 10% of every minute.

Fonctionnement interm. 10% max. de chaque minute d`utilisation.

Performance data based on testing using 10W40 oil with a viscosity of 200 SUS at 54° C (130° F.). Performance data is typical. Actual data may vary slightly from one production motor to another.

Les donnees sur les performances sont basees sur des tests utilisant de l'huile 10W40 d'une viscosite de 200 SUS a 54°C (130°F). Ces donnees correspondent a des situations typiques. Les donnees reelles peuvent varier legerement d'un moteur de production a l'autre.

Intermittierende Werte maximal 10% von jeder Betriebsminute.

Capacidad de funcionamiento intermitente valida para 6 segundos por cada minuto.

Leistungsdaten sind gemessen mit SAE 10W40 bei einer Viskositaet von 43,1 Cst bei 54°C. Geringfuegige Abweichungen von den Katalogdaten sind moeglich.

Datos tecnicos obtenidos con aceite 10W40 de 200 SUS de viscosidad a 54°C (130°F). Los datos proporcionados son valores tipcos. Los valores exactos reales podrian tener una pequena variacion entre distintos motores.

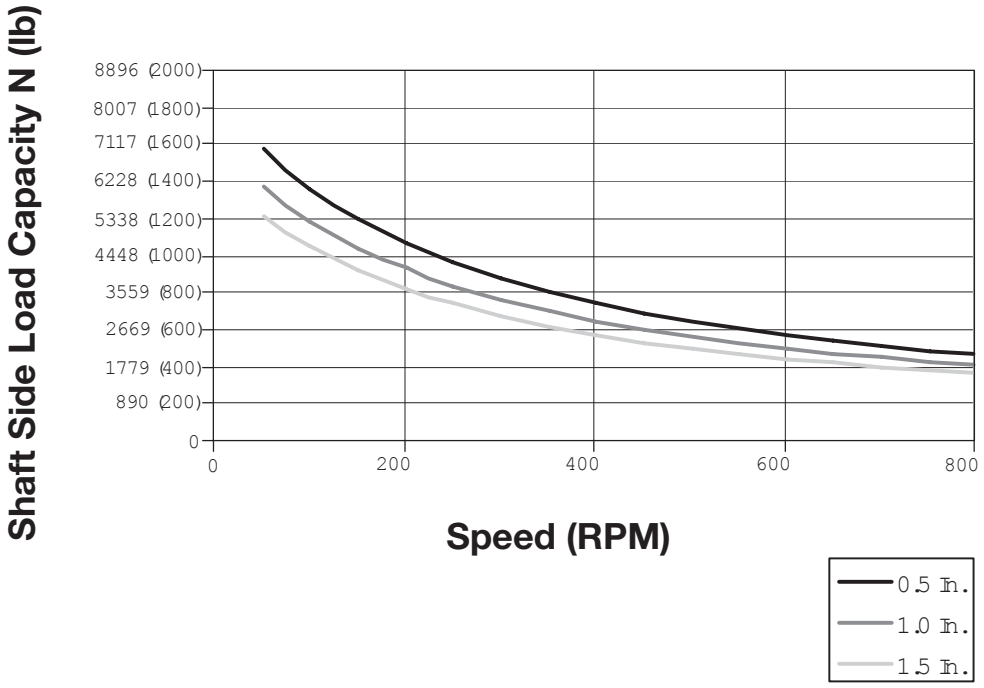

The allowable side load curve is based on bushing life of 2.5 x 10^6 revolutions.
Die zulaessige radiale Wellenbelastung bezieht sich auf die Lager-Lebensdauer 2,5 x 10^6 Umdrehungen.
L'effort radial admissible sur l'arbre depend a une duree de vie 2,5 x 10^6 de rotation.
La curva de carga lateral admisible se basa en vida util de cojinete de 2.5 x 10 revoluciones.

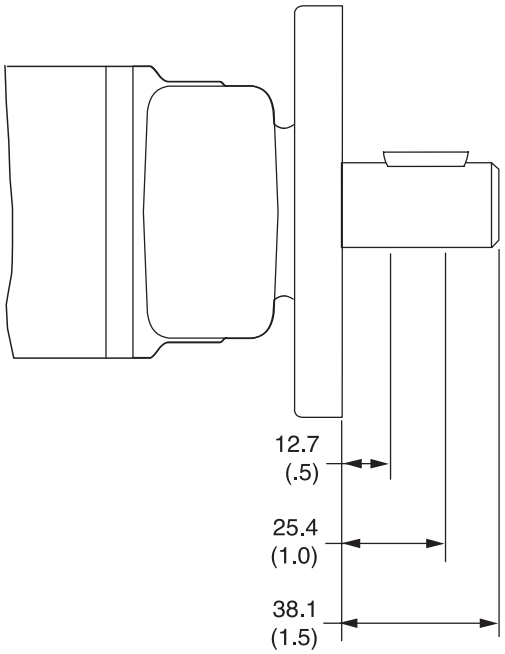

English equivalents for metric specifications are shown in ( ).

Code: AM

SAE A 2-Bolt, 5/16-18 UNC Manifold

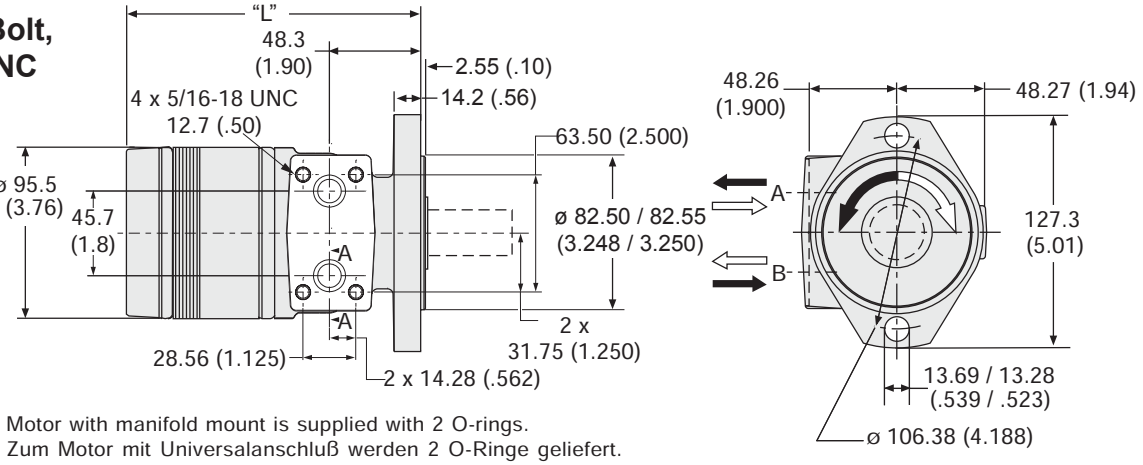

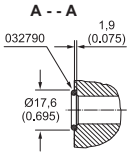

Motor with manifold mount is supplied with 2 O-rings.
Zum Motor mit Universalanschluß werden 2 O-Ringe geliefert.
Deux joints toriques sont livrés avec les moteurs a plan de raccordement universel.
Il blocchetto connessioni è corredato da 2 OR.

Code AM disp.	0036	0045	0050	0065	0080	0100	0130	0165	0195	0230	0260	0295	0330	0365	0390
Weight/Gewicht kg	**5.87**	**6.03**	**6.12**	**6.26**	**6.35**	**6.49**	**6.76**	**7.03**	**7.35**	**7.58**	**7.80**	**8.07**	**8.35**	**8.66**	**8.80**
Poids/Peso (lb)	(12.9)	(13.3)	(13.5)	(13.8)	(14.0)	(14.3)	(14.9)	(15.5)	(16.2)	(16.7)	(17.2)	(17.8)	(18.4)	(19.1)	(19.4)
Length"L" mm	**132.4**	**136**	**138**	**141**	**144**	**147**	**154**	**160**	**166**	**173**	**179**	**185**	**192**	**200**	**205**
"L" (in)	(5.22)	(5.36)	(5.42)	(5.54)	(5.67)	(5.79)	(6.04)	(6.29)	(6.54)	6.79	7.04	7.29	7.54	7.88	8.04

Code: AP

SAE A 2-Bolt, 1/2-14 NPTF

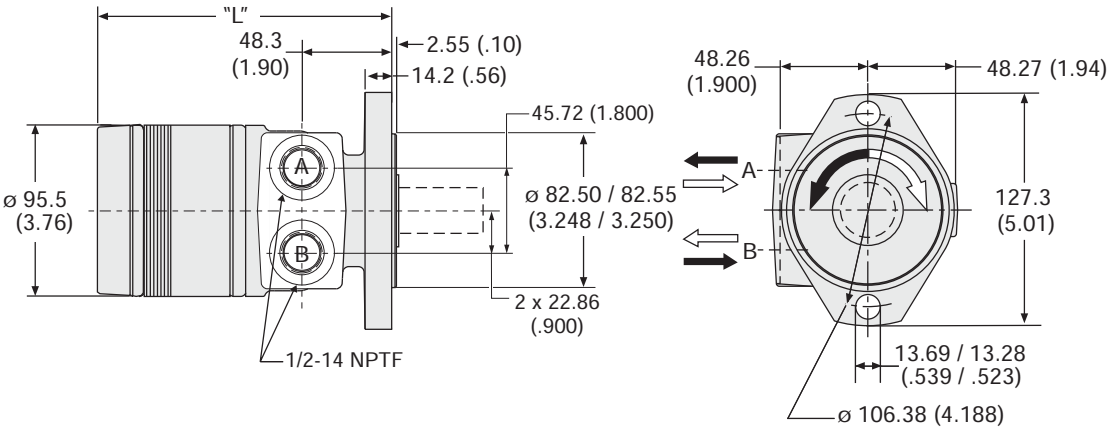

Code AP disp.	0036	0045	0050	0065	0080	0100	0130	0165	0195	0230	0260	0295	0330	0365	0390
Weight/Gewicht kg	**5.87**	**6.03**	**6.12**	**6.26**	**6.35**	**6.49**	**6.76**	**7.03**	**7.35**	**7.58**	**7.80**	**8.07**	**8.35**	**8.66**	**8.80**
Poids/Peso (lb)	(12.9)	(13.3)	(13.5)	(13.8)	(14.0)	(14.3)	(14.9)	(15.5)	(16.2)	(16.7)	(17.2)	(17.8)	(18.4)	(19.1)	(19.4)
Length"L" mm	**132.4**	**136**	**138**	**141**	**144**	**147**	**154**	**160**	**166**	**173**	**179**	**185**	**192**	**200**	**205**
"L" (in)	(5.22)	(5.36)	(5.42)	(5.54)	(5.67)	(5.79)	(6.04)	(6.29)	(6.54)	6.79	7.04	7.29	7.54	7.88	8.04

English equivalents for metric specifications are shown in ( ).

Code: AS

SAE A 2-Bolt, 7/8"-14 SAE O-Ring

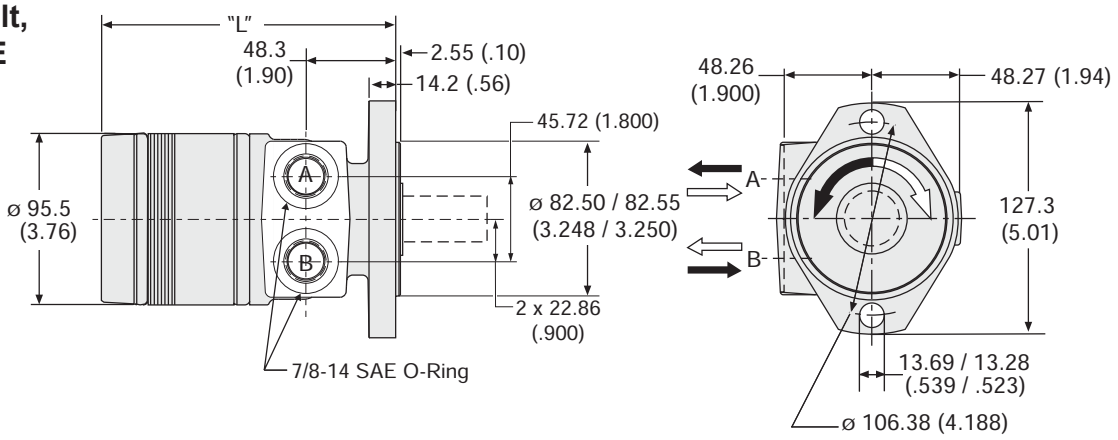

Code AS disp.	0036	0045	0050	0065	0080	0100	0130	0165	0195	0230	0260	0295	0330	0365	0390
Weight/Gewicht kg	5.87	6.03	6.12	6.26	6.35	6.49	6.76	7.03	7.35	7.58	7.80	8.07	8.35	8.66	8.80
Poids/Peso (lb)	(12.9)	(13.3)	(13.5)	(13.8)	(14.0)	(14.3)	(14.9)	(15.5)	(16.2)	(16.7)	(17.2)	(17.8)	(18.4)	(19.1)	(19.4)
Length"L" mm	132.4	136	138	141	144	147	154	160	166	173	179	185	192	200	205
"L" (in)	(5.22)	(5.36)	(5.42)	(5.54)	(5.67)	(5.79)	(6.04)	(6.29)	(6.54)	6.79	7.04	7.29	7.54	7.88	8.04

Code: FM

4-Bolt, 5/16-18 UNC Manifold

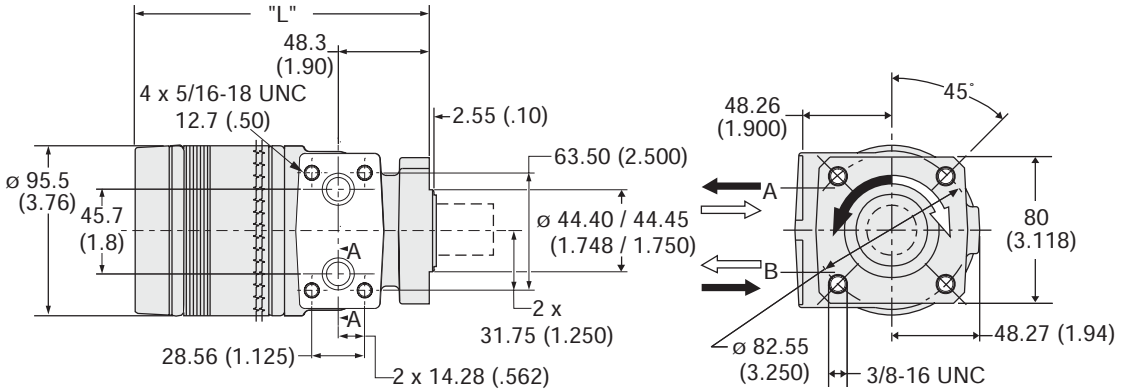

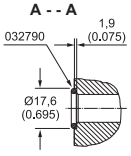

Motor with manifold mount is supplied with 2 O-rings.
Zum Motor mit Universalanschluß werden 2 O-Ringe geliefert.
Deux joints toriques sont livrés avec les moteurs a plan de raccordement universel.
Il blocchetto connessioni è corredato da 2 OR.

Code FM disp.	0036	0045	0050	0065	0080	0100	0130	0165	0195	0230	0260	0295	0330	0365	0390
Weight/Gewicht kg	5.58	5.62	5.67	5.80	5.94	6.08	6.31	6.62	7.03	7.17	7.39	7.62	7.94	8.26	8.39
Poids/Peso (lb)	(12.3)	(12.4)	(12.5)	(12.8)	(13.1)	(13.4)	(13.9)	(14.6)	(15.5)	(15.8)	(16.3)	(16.8)	(17.5)	(18.2)	(18.5)
Length"L" mm	132.4	136	138	141	144	147	154	160	166	173	179	185	192	200	205
"L" (in)	(5.22)	(5.36)	(5.42)	(5.54)	(5.67)	(5.79)	(6.04)	(6.29)	(6.54)	(6.79)	(7.04)	(7.29)	(7.54)	(7.88)	(8.04)

English equivalents for metric specifications are shown in ( ).

002 TB.indd, js

Parker Hannifin Corporation
Hydraulic Pump/Motor Division
Greeneville, Tennessee, USA

Code: FP

4 Bolt, 1/2-14 NPTF

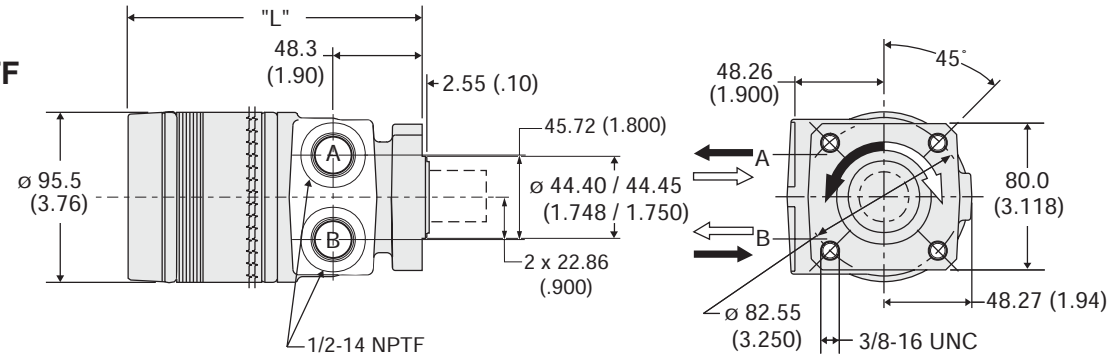

Code FP disp.	0036	0045	0050	0065	0080	0100	0130	0165	0195	0230	0260	0295	0330	0365	0390
Weight/Gewicht kg	**5.58**	**5.62**	**5.67**	**5.80**	**5.94**	**6.08**	**6.31**	**6.62**	**7.03**	**7.17**	**7.39**	**7.62**	**7.94**	**8.26**	**8.39**
Poids/Peso (lb)	(12.3)	(12.4)	(12.5)	(12.8)	(13.1)	(13.4)	(13.9)	(14.6)	(15.5)	(15.8)	(16.3)	(16.8)	(17.5)	(18.2)	(18.5)
Length"L" mm	**132.4**	**136**	**138**	**141**	**144**	**147**	**154**	**160**	**166**	**173**	**179**	**185**	**192**	**200**	**205**
"L" (in)	(5.22)	(5.36)	(5.42)	(5.54)	(5.67)	(5.79)	(6.04)	(6.29)	(6.54)	(6.79)	(7.04)	(7.29)	(7.54)	(7.88)	(8.04)

Code: FS

4 Bolt, 7/8"-14 SAE O-Ring

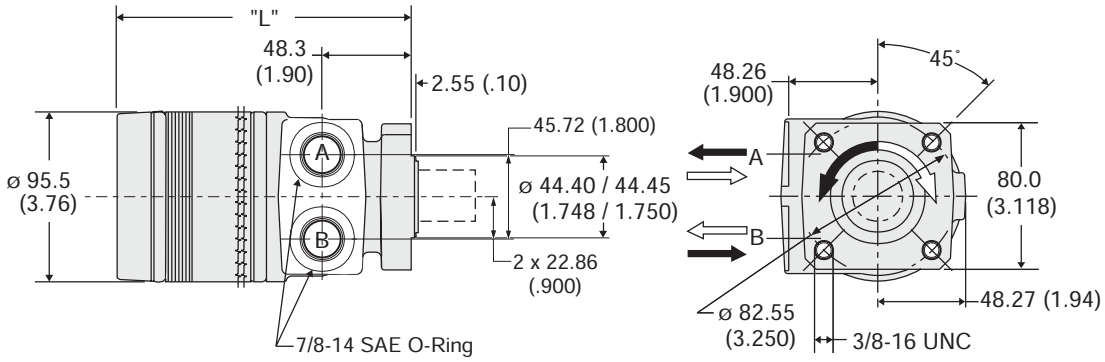

Code FS disp.	0036	0045	0050	0065	0080	0100	0130	0165	0195	0230	0260	0295	0330	0365	0390
Weight/Gewicht kg	**5.58**	**5.62**	**5.67**	**5.80**	**5.94**	**6.08**	**6.31**	**6.62**	**7.03**	**7.17**	**7.39**	**7.62**	**7.94**	**8.26**	**8.39**
Poids/Peso (lb)	(12.3)	(12.4)	(12.5)	(12.8)	(13.1)	(13.4)	(13.9)	(14.6)	(15.5)	(15.8)	(16.3)	(16.8)	(17.5)	(18.2)	(18.5)
Length"L" mm	**132.4**	**136**	**138**	**141**	**144**	**147**	**154**	**160**	**166**	**173**	**179**	**185**	**192**	**200**	**205**
"L" (in)	(5.22)	(5.36)	(5.42)	(5.54)	(5.67)	(5.79)	(6.04)	(6.29)	(6.54)	(6.79)	(7.04)	(7.29)	(7.54)	(7.88)	(8.04)

English equivalents for metric specifications are shown in ( ).

Code: BS
SAE B 2-Bolt
7/8-14 SAE

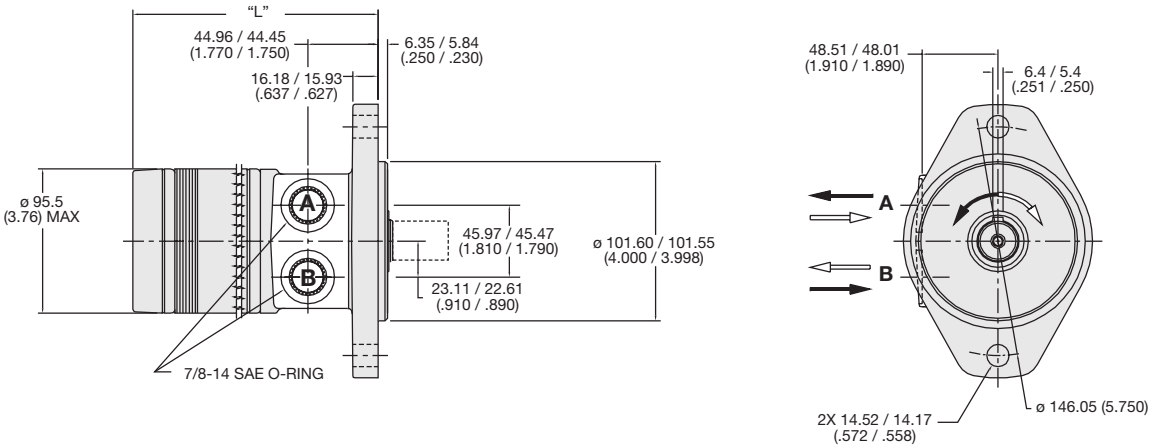

Code BS disp.	0036	0045	0050	0065	0080	0100	0130	0165	0195	0230	0260	0295	0330	0365	0390
Weight/Gewicht kg	**7.27**	**7.34**	**7.48**	**7.62**	**7.71**	**7.84**	**8.11**	**8.39**	**8.70**	**8.93**	**9.16**	**9.43**	**9.70**	**9.97**	**10.1**
Poids/Peso (lb)	(15.9)	(16.3)	(16.5)	(16.8)	(17.0)	(17.3)	(17.9)	(18.5)	(19.2)	(19.7)	(20.2)	(20.8)	(21.4)	(22.0)	(22.4)
Length"L" mm	**131.5**	**132.5**	**134.1**	**137.1**	**140.4**	**143.5**	**149.8**	**156.2**	**162.5**	**168.9**	**175.2**	**181.6**	**187.9**	**196.5**	**200.9**
"L" (in)	(5.18)	(5.22)	(5.28)	(5.40)	(5.53)	(5.65)	(5.90)	(6.15)	(6.40)	(6.65)	(6.90)	(7.15)	(7.40)	(7.74)	(7.91)

Code: CM
SAE A 2 Bolt, Long Pilot
5/16-18 UNC Manifold

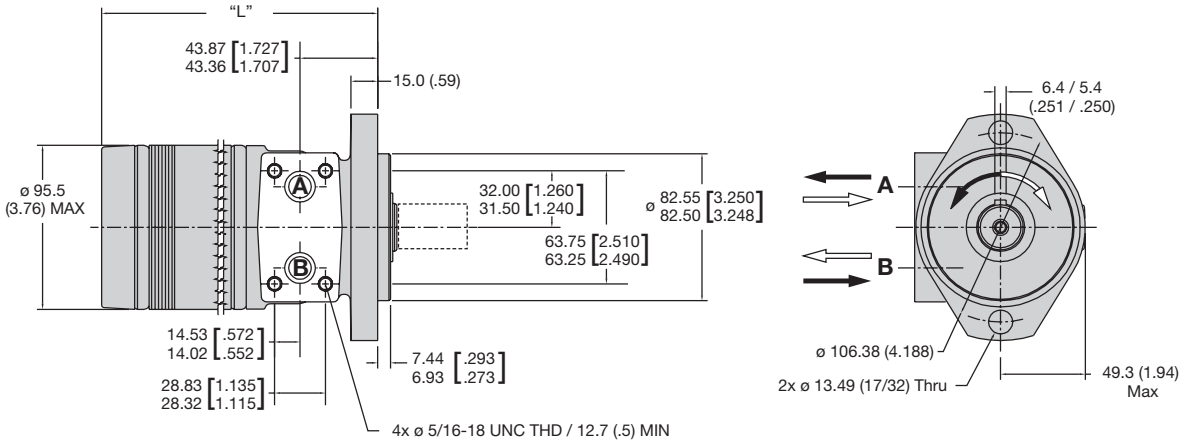

Code CM disp.	0036	0045	0050	0065	0080	0100	0130	0165	0195	0230	0260	0295	0330	0365	0390
Weight/Gewicht kg	**6.17**	**6.35**	**6.44**	**6.58**	**6.67**	**6.80**	**7.07**	**7.35**	**7.66**	**7.84**	**8.11**	**8.39**	**8.66**	**8.94**	**9.11**
Poids/Peso (lb)	(13.6)	(14.0)	(14.2)	(14.5)	(14.7)	(15.0)	(15.6)	(16.2)	(16.9)	(17.4)	(17.9)	(18.5)	(19.1)	(19.7)	(20.1)
Length "L" mm	**130.4**	**131.5**	**132.9**	**136.1**	**139.3**	**142.5**	**148.8**	**155.2**	**161.5**	**167.9**	**174.2**	**180.6**	**186.9**	**195.6**	**199.7**
"L" (in)	(5.13)	(5.18)	(5.23)	(5.36)	(5.48)	(5.61)	(5.86)	(6.11)	(6.36)	(6.61)	(6.86)	(7.11)	(7.36)	(7.70)	(7.86)

English equivalents for metric specifications are shown in ( ).

002 TB.indd, js

Code: MS
Magneto
7/8-14 SAE

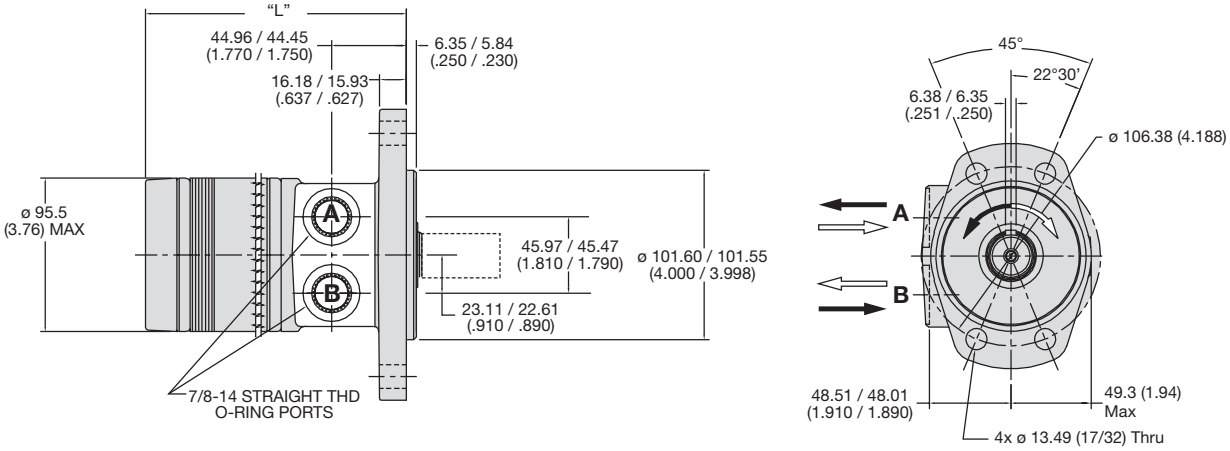

Code MS	disp.	0036	0045	0050	0065	0080	0100	0130	0165	0195	0230	0260	0295	0330	0365	0390
Weight/Gewicht	**kg**	**6.16**	**6.30**	**6.40**	**6.53**	**6.62**	**6.76**	**7.03**	**7.30**	**7.62**	**7.85**	**8.12**	**8.35**	**8.62**	**8.94**	**9.07**
Poids/Peso	(lb)	(13.6)	(13.9)	(14.1)	(14.4)	(14.6)	(14.9)	(15.5)	(16.1)	(16.8)	(17.3)	(17.9)	(18.4)	(19.0)	(19.7)	(20.0)
Length	**"L" mm**	**135.1**	**136.1**	**137.6**	**140.8**	**144.0**	**147.1**	**153.5**	**159.8**	**166.2**	**172.5**	**178.9**	**185.2**	**191.6**	**200.2**	**204.3**
	"L" (in)	(5.32)	(5.36)	(5.42)	(5.54)	(5.67)	(5.79)	(6.04)	(6.29)	(6.54)	(6.79)	(7.04)	(7.29)	(7.54)	(7.88)	(8.04)

Code: BP
SAE B 2-Bolt
1/2-14 NPTF

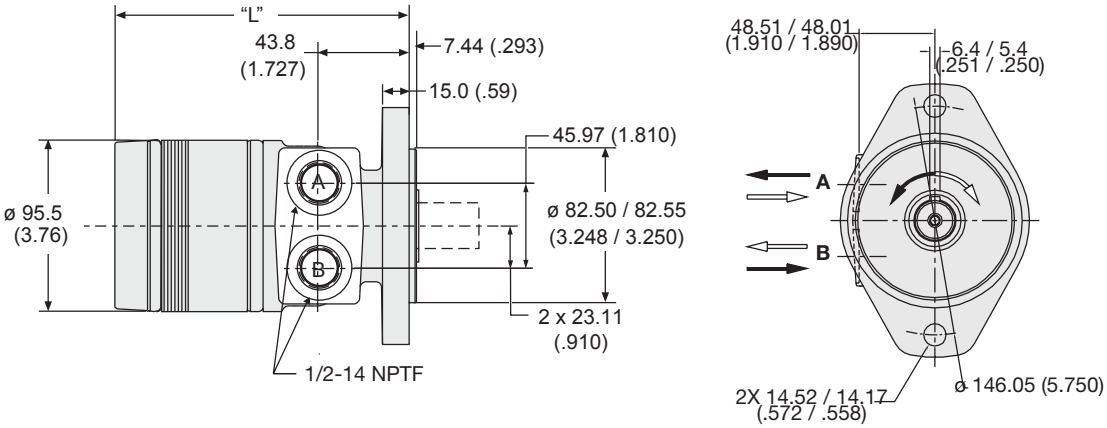

Code BP	disp.	0036	0045	0050	0065	0080	0100	0130	0165	0195	0230	0260	0295	0330	0365	0390
Weight/Gewicht	**kg**	**7.27**	**7.34**	**7.48**	**7.62**	**7.71**	**7.84**	**8.11**	**8.39**	**8.70**	**8.93**	**9.16**	**9.43**	**9.70**	**9.97**	**10.1**
Poids/Peso	(lb)	(15.9)	(16.3)	(16.5)	(16.8)	(17.0)	(17.3)	(17.9)	(18.5)	(19.2)	(19.7)	(20.2)	(20.8)	(21.4)	(22.0)	(22.4)
Length	**"L" mm**	**131.4**	**132.5**	**134.0**	**137.2**	**140.4**	**143.6**	**149.9**	**156.3**	**162.6**	**169.0**	**175.3**	**181.7**	**188.0**	**196.7**	**200.8**
	"L" (in)	(5.18)	(5.22)	(5.28)	(5.40)	(5.53)	(5.65)	(5.90)	(6.15)	(6.40)	(6.65)	(6.90)	(7.15)	(7.40)	(7.74)	(7.90)

English equivalents for metric specifications are shown in ( ).

Code: BM
SAE B 2-Bolt
5/16-18 UNC Manifold

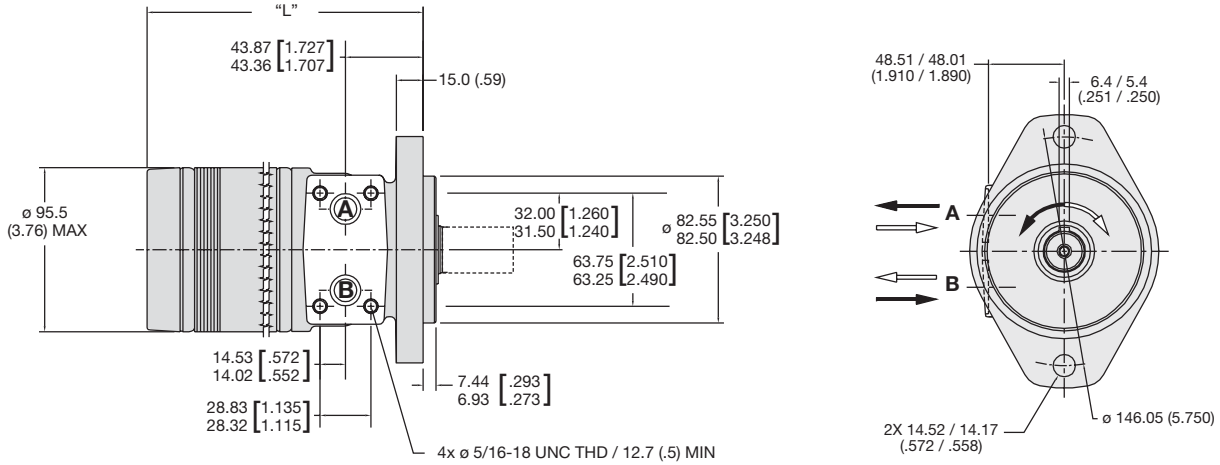

Code BM	disp.	0036	0045	0050	0065	0080	0100	0130	0165	0195	0230	0260	0295	0330	0365	0390
Weight/Gewicht	**kg**	**7.27**	**7.34**	**7.48**	**7.62**	**7.71**	**7.84**	**8.11**	**8.39**	**8.70**	**8.93**	**9.16**	**9.43**	**9.70**	**9.97**	**10.1**
Poids/Peso	(lb)	(15.9)	(16.3)	(16.5)	(16.8)	(17.0)	(17.3)	(17.9)	(18.5)	(19.2)	(19.7)	(20.2)	(20.8)	(21.4)	(22.0)	(22.4)
Length	**"L" mm**	**131.4**	**132.5**	**134.0**	**137.2**	**140.4**	**143.6**	**149.9**	**156.3**	**162.6**	**169.0**	**175.3**	**181.7**	**188.0**	**196.7**	**200.8**
	"L" (in)	(5.18)	(5.22)	(5.28)	(5.40)	(5.53)	(5.65)	(5.90)	(6.15)	(6.40)	(6.65)	(6.90)	(7.15)	(7.40)	(7.74)	(7.90)

Code: CP
SAE A 2 Bolt, Long Pilot
1/2-14 NPTF

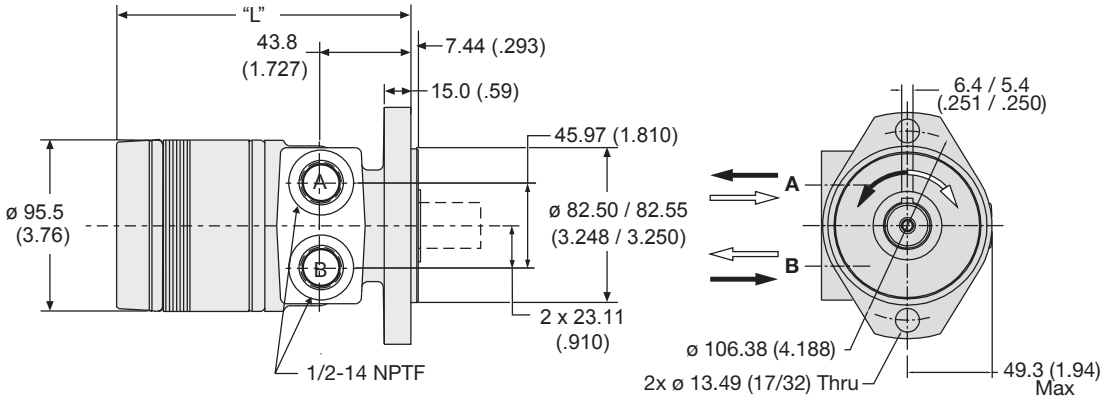

Code CP	disp.	0036	0045	0050	0065	0080	0100	0130	0165	0195	0230	0260	0295	0330	0365	0390
Weight/Gewicht	**kg**	**6.17**	**6.35**	**6.44**	**6.58**	**6.67**	**6.80**	**7.07**	**7.35**	**7.66**	**7.84**	**8.11**	**8.39**	**8.66**	**8.94**	**9.11**
Poids/Peso	(lb)	(13.6)	(14.0)	(14.2)	(14.5)	(14.7)	(15.0)	(15.6)	(16.2)	(16.9)	(17.4)	(17.9)	(18.5)	(19.1)	(19.7)	(20.1)
Length	**"L" mm**	**130.4**	**131.5**	**132.9**	**136.1**	**139.3**	**142.5**	**148.8**	**155.2**	**161.5**	**167.9**	**174.2**	**180.6**	**186.9**	**195.6**	**199.7**
	"L" (in)	(5.13)	(5.18)	(5.23)	(5.36)	(5.48)	(5.61)	(5.86)	(6.11)	(6.36)	(6.61)	(6.86)	(7.11)	(7.36)	(7.70)	(7.86)

English equivalents for metric specifications are shown in ( ).

002 TB.indd, js

Parker Hannifin Corporation
Hydraulic Pump/Motor Division
Greeneville, Tennessee, USA

Code: CS
SAE A 2 Bolt, Long Pilot
7/8-14 SAE

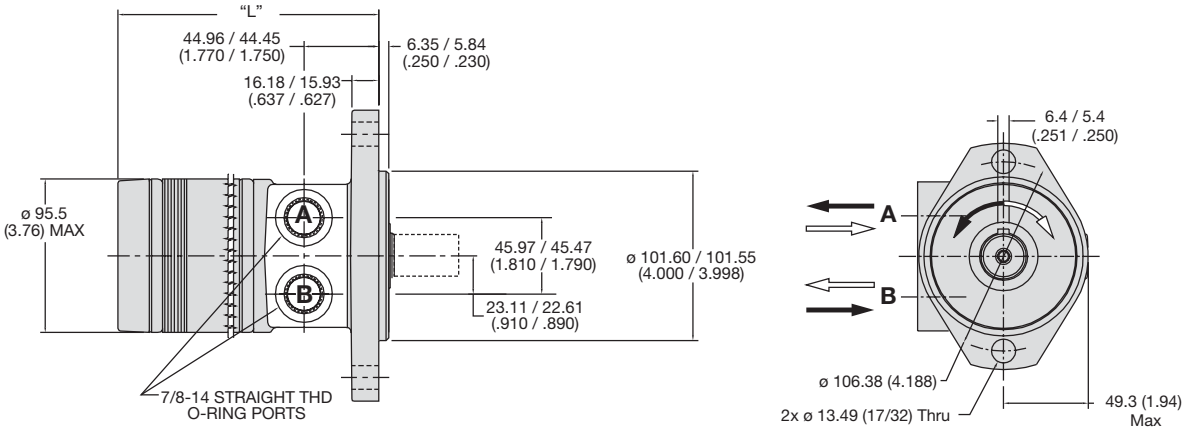

Code CS	disp.	0036	0045	0050	0065	0080	0100	0130	0165	0195	0230	0260	0295	0330	0365	0390
Weight/Gewicht	**kg**	**6.17**	**6.35**	**6.44**	**6.58**	**6.67**	**6.80**	**7.07**	**7.35**	**7.66**	**7.84**	**8.11**	**8.39**	**8.66**	**8.94**	**9.11**
Poids/Peso	(lb)	(13.6)	(14.0)	(14.2)	(14.5)	(14.7)	(15.0)	(15.6)	(16.2)	(16.9)	(17.4)	(17.9)	(18.5)	(19.1)	(19.7)	(20.1)
Length	**"L" mm**	**130.4**	**131.5**	**132.9**	**136.1**	**139.3**	**142.5**	**148.8**	**155.2**	**161.5**	**167.9**	**174.2**	**180.6**	**186.9**	**195.6**	**199.7**
	"L" (in)	(5.13)	(5.18)	(5.23)	(5.36)	(5.48)	(5.61)	(5.86)	(6.11)	(6.36)	(6.61)	(6.86)	(7.11)	(7.36)	(7.70)	(7.86)

Code: MM
Magneto
5/16-18 UNC Manifold

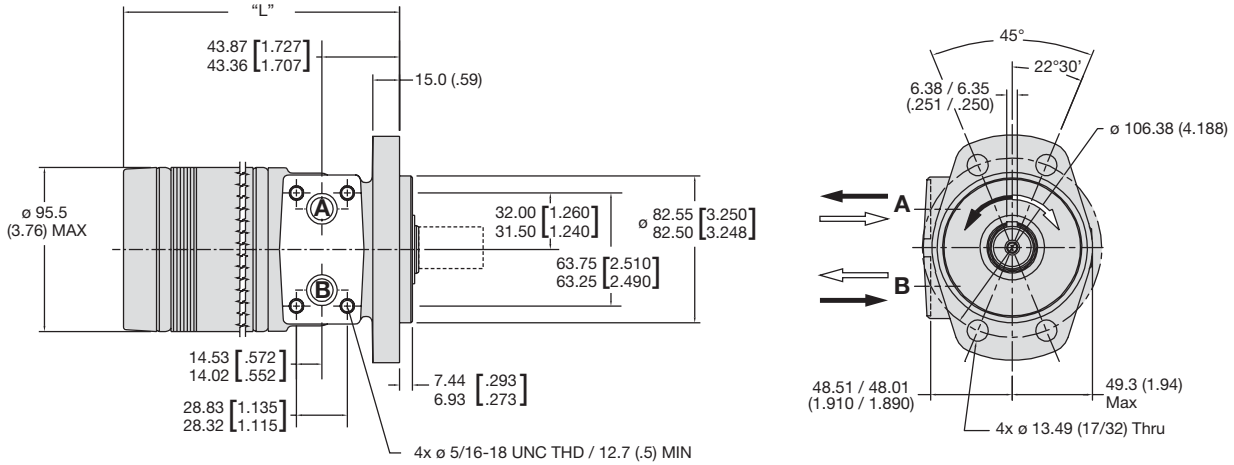

Code MM	disp.	0036	0045	0050	0065	0080	0100	0130	0165	0195	0230	0260	0295	0330	0365	0390
Weight/Gewicht	**kg**	**6.16**	**6.30**	**6.40**	**6.53**	**6.62**	**6.76**	**7.03**	**7.30**	**7.62**	**7.85**	**8.12**	**8.35**	**8.62**	**8.94**	**9.07**
Poids/Peso	(lb)	(13.6)	(13.9)	(14.1)	(14.4)	(14.6)	(14.9)	(15.5)	(16.1)	(16.8)	(17.3)	(17.9)	(18.4)	(19.0)	(19.7)	(20.0)
Length	**"L" mm**	**135.0**	**136.1**	**137.6**	**140.8**	**144.0**	**147.1**	**153.5**	**159.8**	**166.2**	**172.5**	**178.9**	**185.2**	**191.6**	**200.2**	**204.3**
	"L" (in)	(5.32)	(5.36)	(5.42)	(5.54)	(5.67)	(5.79)	(6.04)	(6.29)	(6.54)	(6.79)	(7.04)	(7.29)	(7.54)	(7.88)	(8.04)

English equivalents for metric specifications are shown in ( ).

Code: MP
Magneto
1/2-14 NPTF

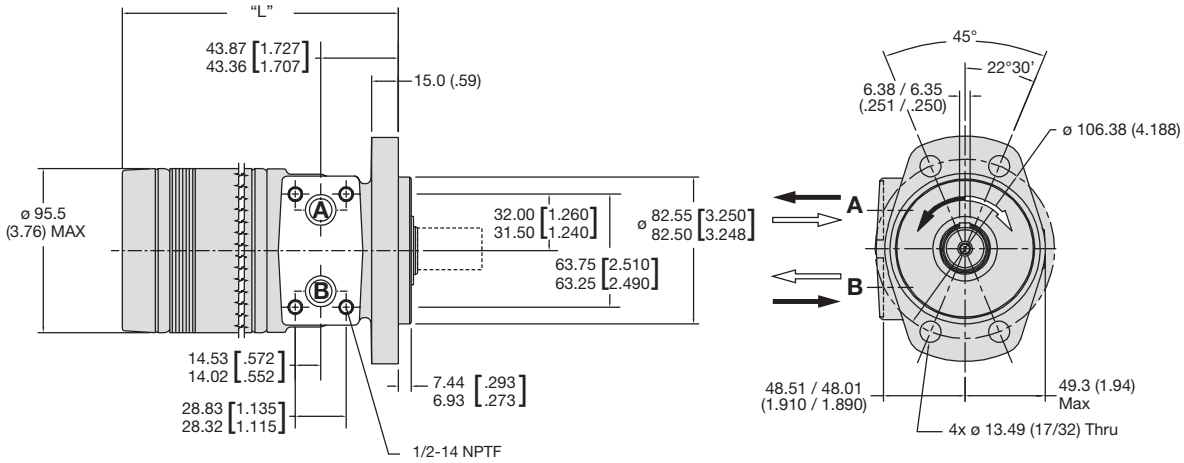

Code MP	disp.	0036	0045	0050	0065	0080	0100	0130	0165	0195	0230	0260	0295	0330	0365	0390
Weight/Gewicht	**kg**	**6.16**	**6.30**	**6.40**	**6.53**	**6.62**	**6.76**	**7.03**	**7.30**	**7.62**	**7.85**	**8.12**	**8.35**	**8.62**	**8.94**	**9.07**
Poids/Peso	(lb)	(13.6)	(13.9)	(14.1)	(14.4)	(14.6)	(14.9)	(15.5)	(16.1)	(16.8)	(17.3)	(17.9)	(18.4)	(19.0)	(19.7)	(20.0)
Length	**"L" mm**	**135.1**	**136.1**	**137.6**	**140.8**	**144.0**	**147.1**	**153.5**	**159.8**	**166.2**	**172.5**	**178.9**	**185.2**	**191.6**	**200.2**	**204.3**
	"L" (in)	(5.32)	(5.36)	(5.42)	(5.54)	(5.67)	(5.79)	(6.04)	(6.29)	(6.54)	(6.79)	(7.04)	(7.29)	(7.54)	(7.88)	(8.04)

English equivalents for metric specifications are shown in ( ).

Code: R
Rear Port
3/4"-16 SAE O-Ring

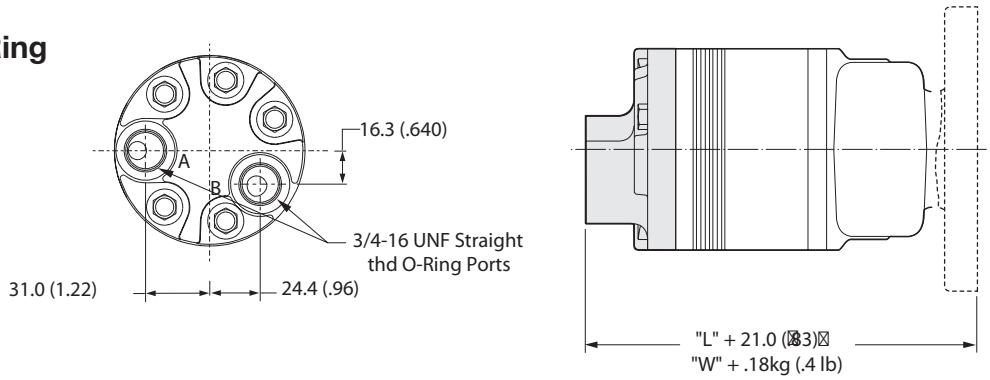

Code: Y
Rear Port
G 1/2 BSPP

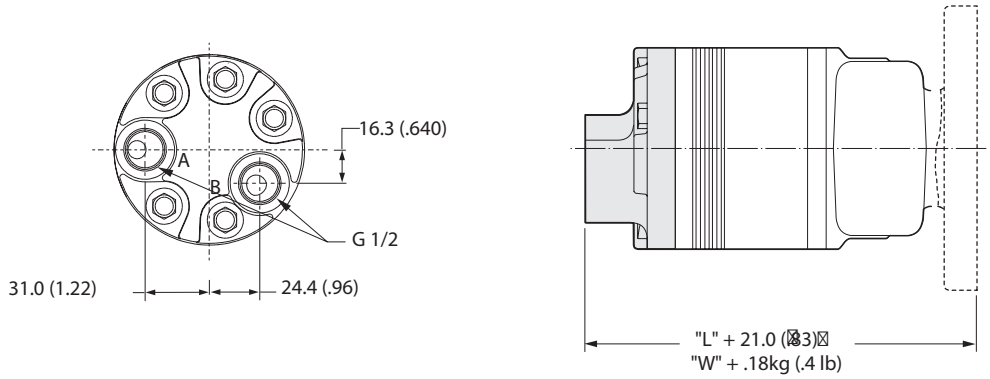

Code: S
7/8"-14 SAE O-Ring

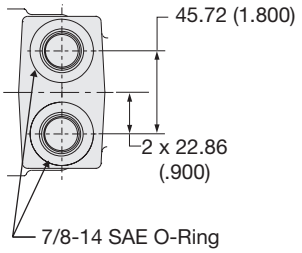

Code: P
1/2"-14 NPTF

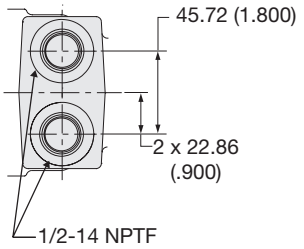

Code: M
Manifold

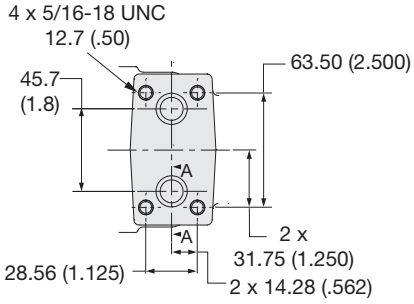

A - - A

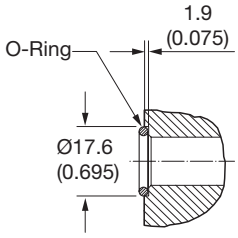

Motor with manifold mount is supplied with 2 o-rings (P/N 032790).

Zum Motor mit Universalanschluß werden 2 o-ringe geliefert.

Deux joints toriques sont livrés avec les moteurs a plan de raccordement universel.

Il blocchetto connessioni è corredato da 2 OR.

Code: W
G 1/2 BSPP
Milled Front

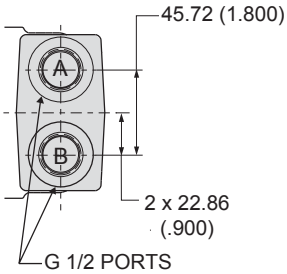

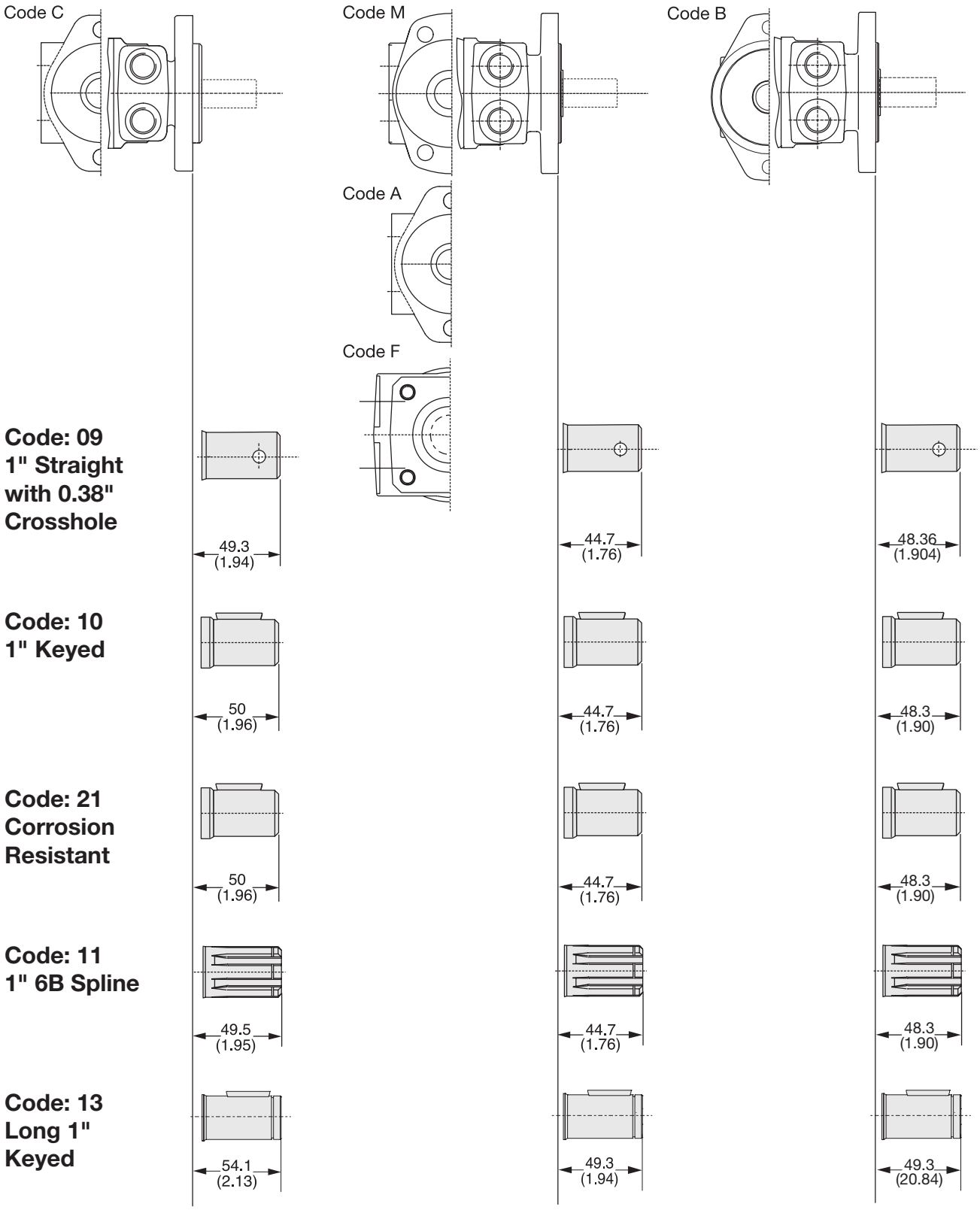
Code C
Code M
Code B
Code A
Code F
Code: 09
1" Straight
with 0.38"
Crosshole
49.3
(1.94)
44.7
(1.76)
48.36
(1.904)
Code: 10
1" Keyed
50
(1.96)
44.7
(1.76)
48.3
(1.90)
Code: 21
Corrosion
Resistant
50
(1.96)
44.7
(1.76)
48.3
(1.90)
Code: 11
1" 6B Spline
49.5
(1.95)
44.7
(1.76)
48.3
(1.90)
Code: 13
Long 1"
Keyed
54.1
(2.13)
49.3
(1.94)
49.3
(20.84)

Code: 09
1" Straight with 0.38" Crosshole

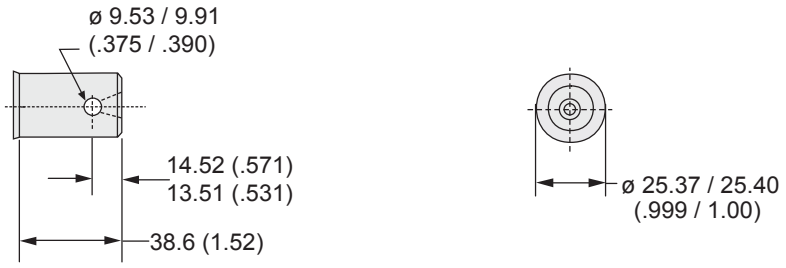

Code: 10
1" Keyed

Code: 21
Corrosion Resistant

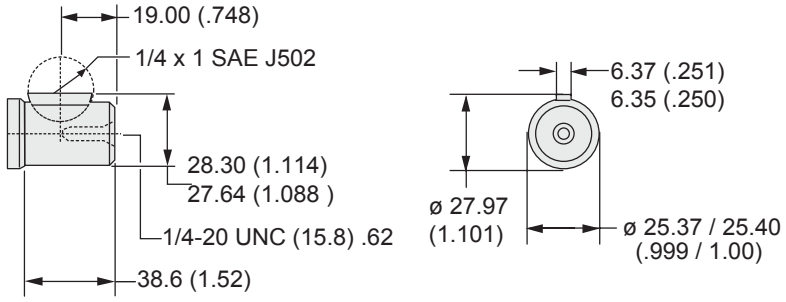

Code: 11
1" 6B Spline

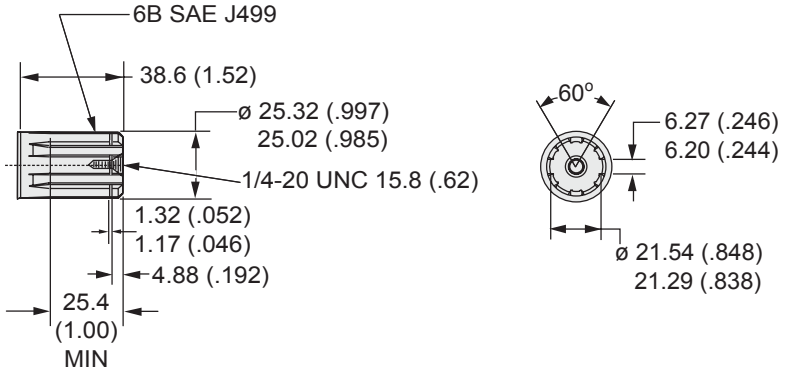

Code: 13
Long 1" Keyed

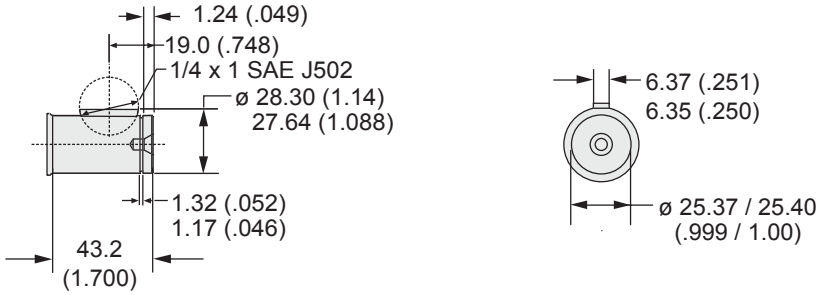

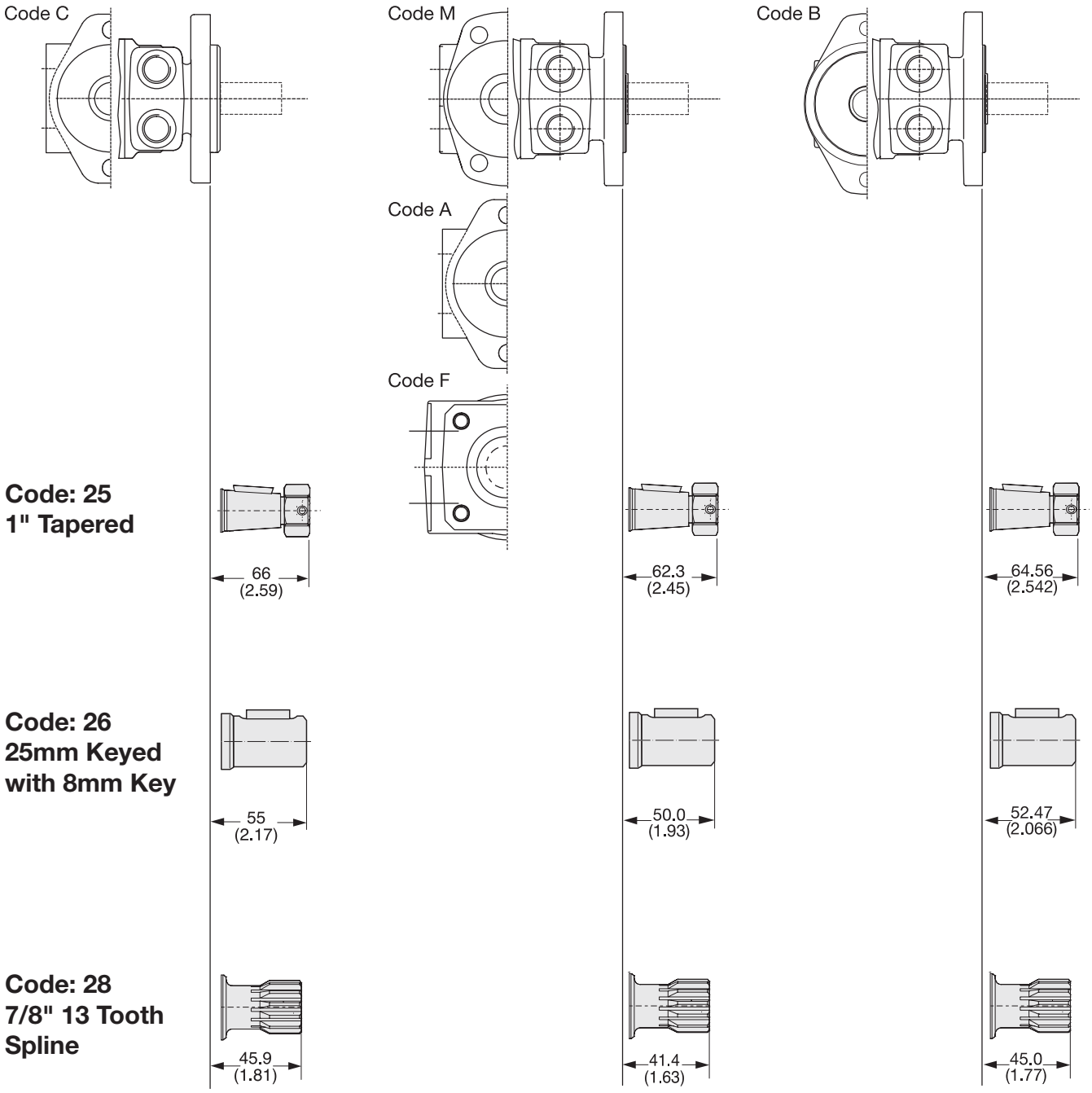
Code C
Code M
Code B
Code A
Code F
Code: 25
1" Tapered
66
(2.59)
62.3
(2.45)
64.56
(2.542)
Code: 26
25mm Keyed
with 8mm Key
55
(2.17)
50.0
(1.93)
52.47
(2.066)
Code: 28
7/8" 13 Tooth
Spline
45.9
(1.81)
41.4
(1.63)
45.0
(1.77)

Code: 25
1" Tapered

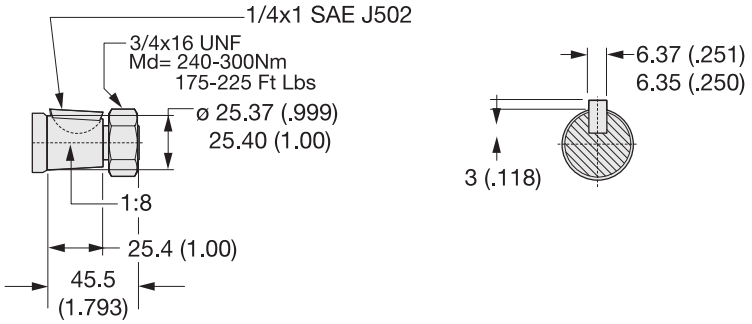

Code: 26
25mm Keyed
with 8mm Key

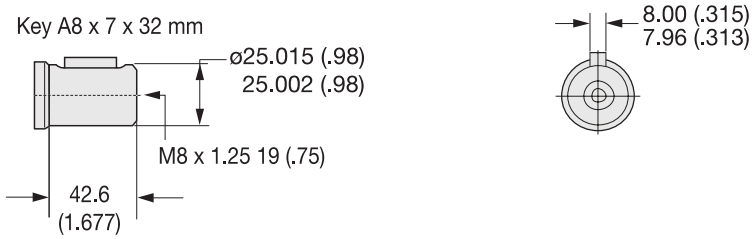

Code: 28
7/8" 13 Tooth
Spline

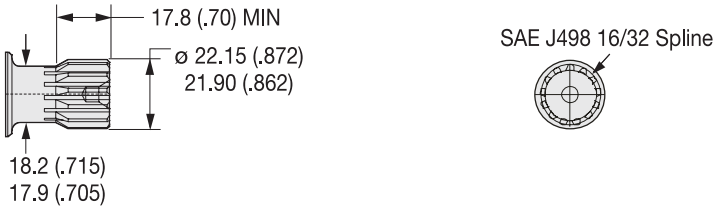

15 Displacements **15 Schluckvolumen** **15 Cylindrée** **15 Despazamientos**		(2.2 – 24.0 in³/rev) **36 . . . 390 cm³/rev**
	Cont	**Int**
Maximum Pressure **Eingangsdruck** **Chaute de pression max.** **Presion Maxima**	(1800 psid) **. . .125 bar**	(2400 psid) **. . .165 bar**
Maximum Oil Flow **Schluckstrom** **Débit d'huile** **Caudal Maximo de Aceite**		(15 gpm) **. . . 57 lpm**
Maximum Speed **Drehzahl** **Vitesse de rotation** **Velocidad Maxima**		(932 rpm) **932 rpm**
	Cont	**Int**
Maximum Torque **Max Drehmoment** **Couple Maxi** **Torque Maximo**	(2000 lb in) **226 Nm**	(2000 lb in) **226 Nm**
Maximum Side Load at Key **Seitenlast** **Charges latèrales** **Carga Maxima Lateral**		(300 lb) **. . . 1340 N**

A Stainless Steel Low Speed, High Torque Motor

This motor utilizes a stainless steel front housing and output shaft, with a glass filled polypropylene rear cover for the ultimate in corrosion protection. It is designed for use under water or in harsh environments where it will be exposed to water or corrosive chemicals. Features such as roller vanes, high pressure shaft seal and full flow spline lubrication are standard.

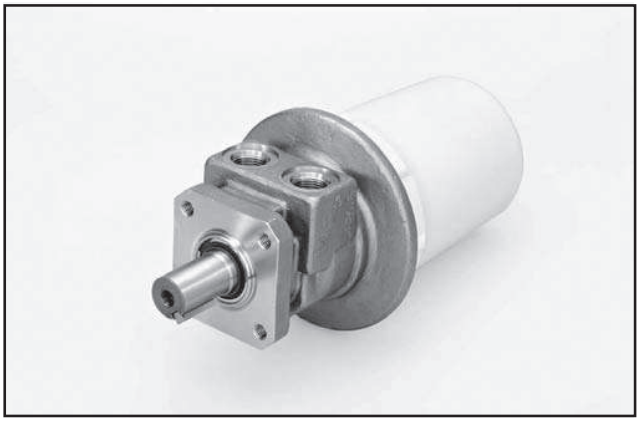

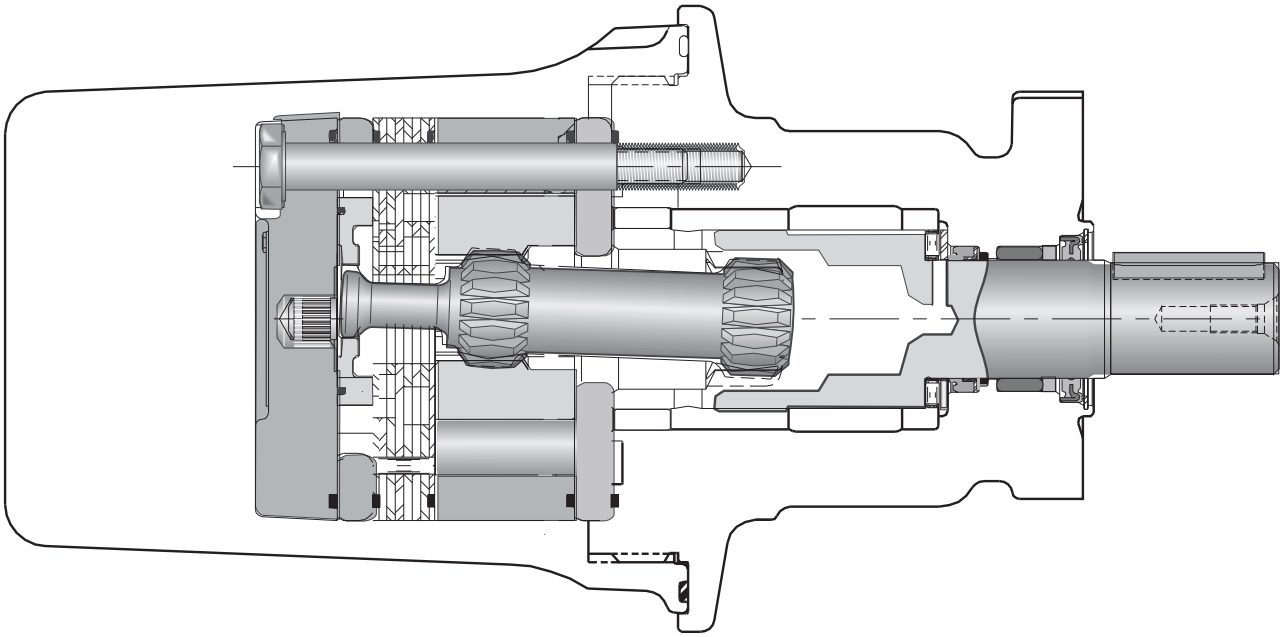

TS	XXXX	X	X	XX	0	XXXX
Series	Displacement Schluckvolumen Cylindrée Desplazamiento	Mounting Gehäuse Carter Montaje	Ports Anschluß Plan de raccordement Lumbreras	Shaft Welle Arbre Eje	Rotation Drehrichtung Direction de rotation Rotacion	Options Opciones

Code	cm^3/U cm^3/tr $cm^3/giro$	in^3/rev
0036	36	2.2
0045	41	2.5
0050	49	3.0
0065	65	4.0
0080	82	5.0
0100	98	6.0
0130	130	8.0
0165	163	10.0
0195	195	11.9
0230	228	13.9
0260	260	15.9
0295	293	17.9
0330	238	20.0
0365	370	22.6
0390	392	24.0

Code	Mounting
F	4 Bolt, 3/8-16 UNC

Code	Ports
S	7/8-14 SAE

Code	Shaft
77	1" Square Keyed Stainless Steel

Code	Rotation
0	Standard
1	Reverse Timed Manifold

Code	Options
AAXH	Fluorocarbon Body, Shaft, Dirt & Water Seals. Vespel Commutator Seals.

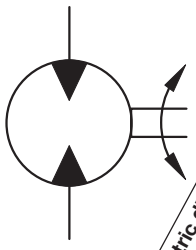

Motor Series TS	Geometric displacement / Geom. Schluckvolumen / Cylindrée / Despazamientos	Max. speed @ Max. intermittent flow / Max. Drehzahl Intermittierender Betrieb: / Vitesse de rotation maxi / Velocidad maxima a caudal intermitente maximo	Max. oil flow / Max. Schluckstrom / Débit d'huile maxi / Caudal Maximo de Aceite		Max. Differential Pressure / Max. Druckgefälle / Chute de pression maxi / Presion diferencial maxima		Max. supply pressure / Max. Eingangsdruck / Pression maxi entrée / Presion maxima de alimentacion	Max. torque / Max. Drehmoment / Couple maxi / Torque Maximo		Max. performance / Max. Leistungabgabe / Puissance de sortie maxi / Maximo redinmiento	Min. starting torque / Min. Anlaufmoment / Couple min. fourni au dé manrage / Torque minimo de arranque	
	cm³/rev in³/rev	rev/min	***cont / int**** **l/min** g/min		***cont / int**** **bar** psid		***max*** **bar** psig	***cont / int**** **Nm** lb-in		***max*** **KW** HP	***cont / int**** **Nm** lb-in	
TS 0036	**36** 2.2	932	**34** 9	**34** 9	**125** 1800	165 2400	**190** 2750	**48** 427	**67** 596	**6.6** 8.8	**44** 385	**50** 440
TS 0045	**41** 2.5	805	**34** 9	**34** 9	**125** 1800	**165** 2400	**190** 2750	**64** 526	**88** 731	**7.2** 9.7	**39** 341	**52** 461
TS 0050	**49** 3.0	678	**34** 9	**34** 9	**125** 1800	**165** 2400	**190** 2750	**78** 693	**107** 946	**7.5** 10.1	**36** 319	**70** 619
TS 0065	**65** 4.0	511	**34** 9	**34** 9	**125** 1800	**165** 2400	**190** 2750	**107** 946	**145** 1284	**7.8** 10.4	**66** 582	**99** 977
TS 0080	**82** 5.0	409	**34** 9	**34** 9	**125** 1800	**165** 2400	**190** 2750	**135** 1193	**184** 1624	**7.8** 10.5	**92** 816	**139** 1226
TS 0100	**98** 6.0	454	**45** 12	**45** 12	**125** 1800	**165** 2400	**190** 2750	**160** 1411	**217** 1917	**10.2** 13.8	**119** 1050	**158** 1400
TS 0130	**130** 8.0	430	**45** 12	**57** 15	**131** 1900	**131** 1900	**190** 2750	**226** 2000	**226** 2000	**10.1** 13.6	**172** 1520	**172** 1520
TS 0165	**163** 10.0	343	**45** 12	**57** 15	**103** 1500	**103** 1500	**190** 2750	**226** 2000	**226** 2000	**8.1** 10.9	**165** 1460	**165** 1460
TS 0195	**195** 11.9	287	**45** 12	**57** 15	**83** 1200	**83** 1200	**190** 2750	**226** 2000	**226** 2000	**6.8** 9.1	**179** 1586	**179** 1586
TS 0230	**228** 13.9	246	**45** 12	**57** 15	**76** 1100	**76** 1100	**190** 2750	**226** 2000	**226** 2000	**5.8** 7.8	**190** 1680	**190** 1680
TS 0260	**260** 15.9	216	**45** 12	**57** 15	**69** 1000	**69** 1000	**190** 2750	**226** 2000	**226** 2000	**5.1** 6.9	**188** 1660	**188** 1660
TS 0295	**293** 17.9	191	**45** 12	**57** 15	**62** 900	**62** 900	**190** 2750	**226** 2000	**226** 2000	**4.6** 6.1	**181** 1600	**181** 1600
TS 0330	**328** 20.0	171	**45** 12	**57** 15	**41** 600	**41** 600	**190** 2750	**226** 2000	**226** 2000	**4.0** 5.4	**181** 1600	**181** 1600
TS 0365	**370** 22.6	151	**45** 12	**57** 15	**41** 600	**41** 600	**190** 2750	**226** 2000	**226** 2000	**3.6** 4.8	**191** 1690	**191** 1690
TS 0390	**392** 24.0	143	**45** 12	**57** 15	**41** 600	**41** 600	**190** 2750	**226** 2000	**226** 2000	**3.4** 4.5	**179** 1580	**179** 1580

Performance data based on testing using 10W40 oil with a viscosity of 43,1 cSt. (200 SUS) at 54° C (130° F.). Performance data is typical. Actual data may vary slightly from one production motor to another.

Les donnees sur les performances sont basees sur des tests utilisant de l'huile 10W40 d'une viscosite de 200 SUS a 54°C (130°F). Ces donnees correspondent a des situations typiques. Les donnees reelles peuvent varier legerement d'un moteur de production a l'autre.

Leistungsdaten sind gemessen mit SAE 10W40 bei einer Viskositaet von 43,1 Cst bei 54°C. Geringfuegige Abweichungen von den Katalogdaten sind moeglich.

Datos tecnicos obtenidos con aceite 10W40 de 200 SUS de viscosidad a 54°C (130°F). Los datos proporcionados son valores tipcos. Los valores exactos reales podrian tener una pequena variacion entre distintos motores.

* Intermittent operation rating applies to 10% of every minute.
Intermittierende Werte maximal 10% von jeder Betriebsminute.
Fonctionnement interm. 10% max. de chaque minute d`utilisation.
Capacidad de funcionamiento intermitente valida para 10% por cada minuto.

TS 0036

2.2 cu in / rev

PRESSURE (PSID)

Flow (GPM)	500	1000	1500	1800	2000	2400
.5	109 **46**	225 **37**	344 **26**	419 **20**	470 **15**	567 **7**
1	111 **99**	230 **89**	351 **78**	429 **71**	478 **68**	579 **58**
2	112 **203**	236 **192**	363 **179**	442 **172**	493 **170**	598 **159**
3	112 **307**	241 **296**	369 **283**	449 **276**	503 **270**	609 **259**
4	108 **413**	241 **398**	372 **383**	452 **376**	508 **371**	619 **360**
5	104 **517**	238 **502**	370 **487**	454 **478**	507 **473**	621 **460**
7	88 **725**	225 **710**	360 **694**	444 **681**	500 **674**	615 **661**
9	71 **933**	207 **916**	344 **896**	425 **885**	483 **876**	599 **862**
12	48 **1245**	184 **1225**	321 **1203**	405 **1192**	459 **1181**	572 **1163**

TORQUE (LB IN) 599
SPEED (RPM) 862

36 cc / rev

EU

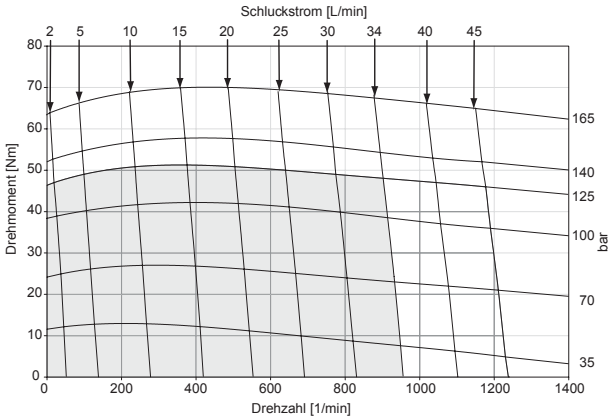

TS 0045

2.5 cu in / rev

PRESSURE (PSID)

Flow (GPM)	500	1000	1500	1800	2000	2400
.5	119 **32**	263 **18**	413 **3**			
1	123 **77**	277 **61**	425 **44**	518 **37**	581 **28**	705 **18**
2	132 **168**	290 **150**	450 **131**	542 **122**	606 **113**	719 **97**
3	136 **256**	296 **239**	462 **220**	557 **211**	623 **199**	748 **184**
4	132 **344**	296 **326**	464 **307**	567 **296**	635 **286**	768 **269**
5	129 **433**	290 **416**	464 **394**	567 **381**	639 **371**	779 **352**
7	119 **610**	284 **590**	460 **567**	565 **551**	635 **541**	779 **521**
9	109 **785**	277 **765**	450 **740**	555 **723**	625 **710**	768 **690**

TORQUE (LB IN) 779
SPEED (RPM) 521

41 cc / rev

EU

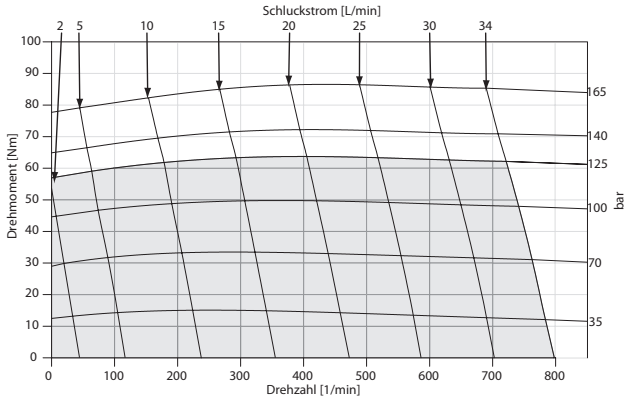

☐ Cont. ☐ Int.

Intermittent operation rating applies to 10% of every minute.

Intermittierende Werte maximal 10% von jeder Betriebsminute.

Fonctionnement interm. 10% max. de chaque minute d`utilisation.

Capacidad de funcionamiento intermitente valida para 10% por cada minuto.

Performance data based on testing using 10W40 oil with a viscosity of 200 SUS at 54° C (130° F.). Performance data is typical. Actual data may vary slightly from one production motor to another.

Leistungsdaten sind gemessen mit SAE 10W40 bei einer Viskositaet von 43,1 Cst bei 54°C. Geringfuegige Abweichungen von den Katalogdaten sind moeglich.

Les donnees sur les performances sont basees sur des tests utilisant de l'huile 10W40 d'une viscosite de 200 SUS a 54°C (130°F). Ces donnees correspondent a des situations typiques. Les donnees reelles peuvent varier legerement d'un moteur de production a l'autre.

Datos tecnicos obtenidos con aceite 10W40 de 200 SUS de viscosidad a 54°C (130°F). Los datos proporcionados son valores tipcos. Los valores exactos reales podrian tener una pequena variacion entre distintos motores.

TS 0050

3.0 cu in / rev

PRESSURE (PSID)

Flow (GPM)	500	1000	1500	1800	2000	2400
.5	146 **25**	324 **13**	506 **0**			
1	156 **66**	338 **50**	521 **35**	631 **28**	701 **20**	842 **9**
2	166 **141**	359 **127**	555 **110**	666 **102**	742 **94**	877 **80**
3	162 **218**	365 **203**	566 **186**	688 **176**	764 **168**	912 **153**
4	164 **295**	361 **279**	570 **261**	693 **251**	775 **242**	936 **227**
5	156 **372**	359 **355**	568 **337**	691 **327**	779 **317**	947 **302**
7	146 **525**	350 **506**	561 **486**	691 **474**	775 **466**	949 **448**
9	135 **678**	338 **659**	551 **638**	680 **623**	766 **615**	939 **596**

TORQUE (LB IN) 939
SPEED (RPM) 596

49 cc / rev

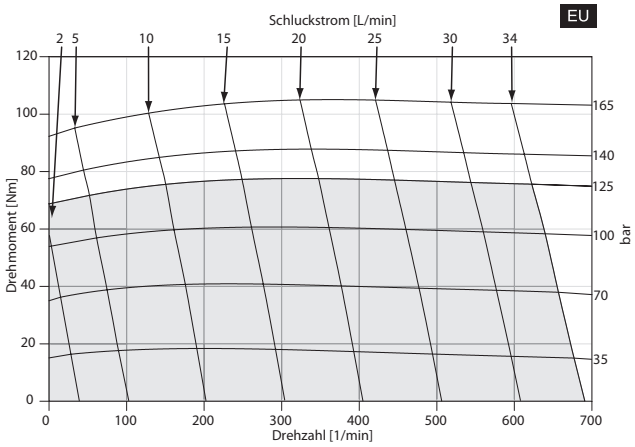

TS 0065

4.0 cu in / rev

PRESSURE (PSID)

Flow (GPM)	500	1000	1500	1800	2000	2400
.5	217 **22**	459 **14**	707 **6**	862 **1**		
1	225 **51**	479 **42**	735 **34**	887 **29**	992 **24**	1194 **17**
2	237 **108**	496 **98**	761 **90**	921 **85**	1028 **81**	1225 **70**
3	237 **166**	504 **156**	777 **147**	941 **140**	1045 **136**	1251 **126**
4	228 **224**	501 **214**	777 **203**	946 **197**	1054 **192**	1273 **181**
5	225 **281**	496 **271**	775 **260**	946 **252**	1059 **247**	1282 **237**
7	208 **396**	485 **385**	763 **373**	938 **364**	1051 **359**	1282 **347**
9	194 **511**	468 **499**	749 **485**	924 **476**	1037 **470**	1265 **457**

TORQUE (LB IN) 1282
SPEED (RPM) 347

65 cc / rev

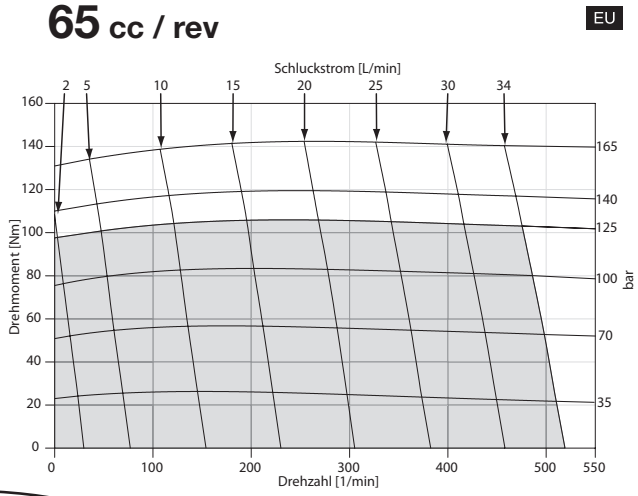

Cont. Int.

Intermittent operation rating applies to 10% of every minute.

Intermittierende Werte maximal 10% von jeder Betriebsminute.

Fonctionnement interm. 10% max. de chaque minute d`utilisation.

Capacidad de funcionamiento intermitente valida para 10% por cada minuto.

Performance data based on testing using 10W40 oil with a viscosity of 200 SUS at 54° C (130° F.). Performance data is typical. Actual data may vary slightly from one production motor to another.

Leistungsdaten sind gemessen mit SAE 10W40 bei einer Viskositaet von 43,1 Cst bei 54°C. Geringfuegige Abweichungen von den Katalogdaten sind moeglich.

Les donnees sur les performances sont basees sur des tests utilisant de l'huile 10W40 d'une viscosite de 200 SUS a 54°C (130°F). Ces donnees correspondent a des situations typiques. Les donnees reelles peuvent varier legerement d'un moteur de production a l'autre.

Datos tecnicos obtenidos con aceite 10W40 de 200 SUS de viscosidad a 54°C (130°F). Los datos proporcionados son valores tipcos. Los valores exactos reales podrian tener una pequena variacion entre distintos motores.

TS 0080

5.0 cu in / rev

PRESSURE (PSID)

Flow (GPM)	500	1000	1500	1800	2000	2400
.5	259 **18**	563 **10**	881 **5**	1078 **1**		
1	274 **40**	589 **33**	911 **26**	1100 **22**	1230 **19**	1489 **11**
2	285 **86**	615 **78**	952 **70**	1144 **67**	1281 **63**	1530 **53**
3	293 **132**	630 **124**	970 **116**	1174 **110**	1311 **106**	1570 **98**
4	285 **179**	630 **171**	978 **161**	1185 **155**	1330 **152**	1604 **142**
5	285 **226**	626 **216**	978 **206**	1196 **200**	1341 **196**	1626 **185**
7	267 **317**	622 **307**	974 **296**	1189 **290**	1337 **285**	1626 **275**
9	256 **410**	604 **398**	959 **387**	1178 **379**	1322 **375**	1611 **362**

TORQUE (LB IN) 1611
SPEED (RPM) 362

82 cc / rev

EU

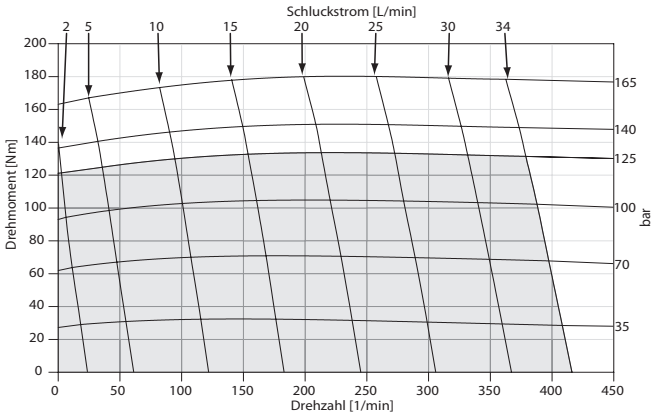

TS 0100

6.0 cu in / rev

PRESSURE (PSID)

Flow (GPM)	500	1000	1500	1800	2000	2400
.5	316 **16**	674 **13**	1045 **9**	1267 **7**	1411 **4**	1708 **0**
1	327 **34**	698 **32**	1072 **27**	1298 **25**	1454 **23**	1743 **18**
2	339 **74**	725 **69**	1111 **64**	1353 **61**	1509 **58**	1805 **53**
3	351 **111**	741 **107**	1146 **102**	1388 **98**	1544 **95**	1852 **89**
4	351 **148**	752 **143**	1162 **139**	1404 **135**	1571 **132**	1887 **126**
5	347 **187**	749 **183**	1170 **176**	1415 **172**	1583 **169**	1910 **162**
7	320 **264**	737 **257**	1162 **250**	1415 **246**	1587 **242**	1926 **235**
9	308 **339**	721 **333**	1142 **325**	1400 **319**	1571 **316**	1910 **307**
12	257 **454**	674 **446**	1096 **437**	1474 **430**	1524 **426**	1864 **418**

TORQUE (LB IN) 1910
SPEED (RPM) 307

98 cc / rev

EU

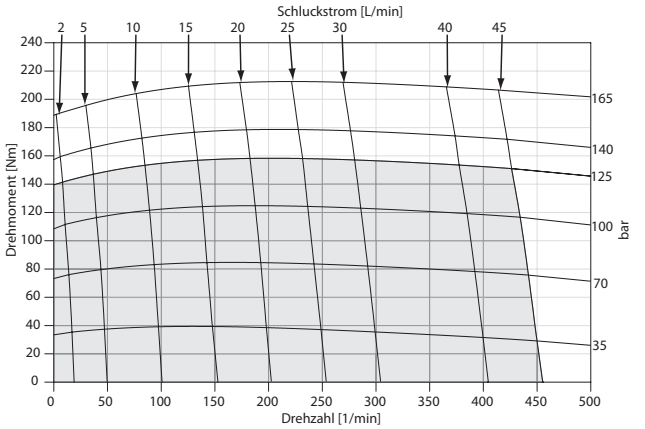

☐ Cont. ☐ Int.

Intermittent operation rating applies to 10% of every minute.

Intermittierende Werte maximal 10% von jeder Betriebsminute.

Fonctionnement interm. 10% max. de chaque minute d`utilisation.

Capacidad de funcionamiento intermitente valida para 10% por cada minuto.

Performance data based on testing using 10W40 oil with a viscosity of 200 SUS at 54° C (130° F.). Performance data is typical. Actual data may vary slightly from one production motor to another.

Leistungsdaten sind gemessen mit SAE 10W40 bei einer Viskositaet von 43,1 Cst bei 54°C. Geringfuegige Abweichungen von den Katalogdaten sind moeglich.

Les donnees sur les performances sont basees sur des tests utilisant de l'huile 10W40 d'une viscosite de 200 SUS a 54°C (130°F). Ces donnees correspondent a des situations typiques. Les donnees reelles peuvent varier legerement d'un moteur de production a l'autre.

Datos tecnicos obtenidos con aceite 10W40 de 200 SUS de viscosidad a 54°C (130°F). Los datos proporcionados son valores tipcos. Los valores exactos reales podrian tener una pequena variacion entre distintos motores.

TS 0130

8.0 cu in / rev PRESSURE (PSID)

	500	1000	1500	1800	1900
.5	455 **11**	966 **10**	1485 **7**	1802 **5**	1897 **4**
1	463 **27**	983 **24**	1511 **21**	1836 **19**	1931 **18**
2	476 **55**	1018 **52**	1563 **49**	1893 **46**	1988 **45**
3	485 **84**	1039 **81**	1594 **77**	1927 **73**	2027 **73**
4	489 **113**	1048 **109**	1611 **105**	1944 **103**	2044 **101**
5	481 **142**	1044 **138**	1615 **133**	1953 **130**	2057 **129**
7	459 **199**	1026 **195**	1598 **190**	1944 **186**	2044 **185**
9	411 **257**	983 **252**	1568 **246**	1914 **242**	2022 **241**
12	342 **343**	914 **338**	1494 **331**	1874 **327**	1953 **325**
15	260 **430**	823 **424**	1394 **416**	1745 **411**	1849 **410**

Flow (GPM)

TORQUE (LB IN) 1953
SPEED (RPM) 325

130 cc / rev

EU

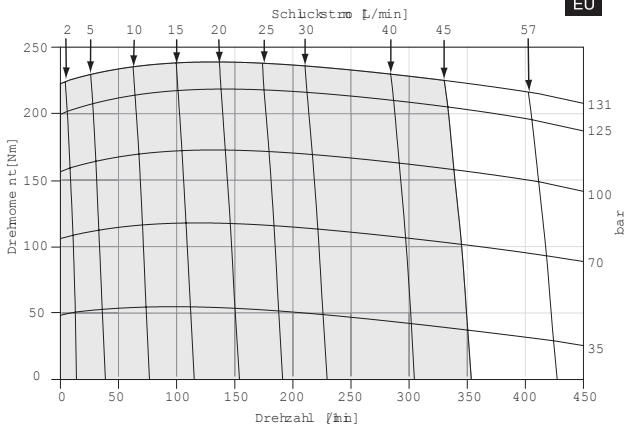

TS 0165

10.0 cu in / rev
PRESSURE (PSID)

	250	500	1000	1250	1500
.5	227 **12**	537 **9**	1148 **7**	1461 **6**	1772 **4**
1	237 **23**	554 **21**	1177 **18**	1496 **16**	1813 **15**
2	247 **46**	578 **44**	1226 **40**	1560 **38**	1891 **37**
3	254 **69**	591 **67**	1263 **63**	1600 **61**	1936 **59**
4	251 **91**	595 **89**	1276 **86**	1621 **84**	1965 **82**
5	239 **115**	587 **113**	1288 **109**	1634 **107**	1981 **104**
7	204 **162**	562 **159**	1267 **154**	1627 **151**	1985 **149**
9	155 **208**	517 **205**	1230 **200**	1594 **197**	1956 **194**
12	61 **277**	427 **274**	1140 **268**	1509 **265**	1874 **261**
15		324 **343**	1029 **337**	1394 **334**	1755 **331**

Flow (GPM)

TORQUE (LB IN) 1956
SPEED (RPM) 194

163 cc / rev

EU

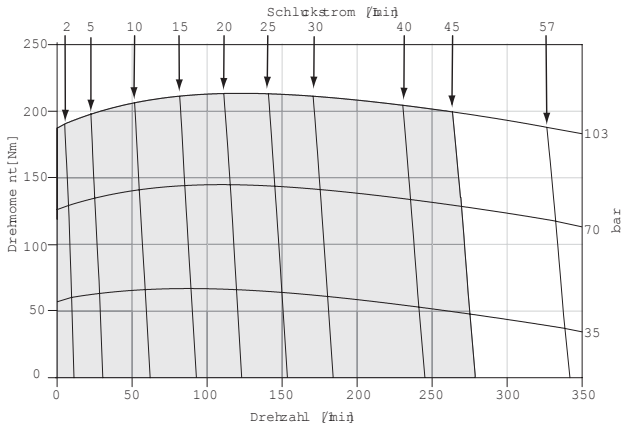

☐ Cont. ☐ Int.

Intermittent operation rating applies to 10% of every minute.

Fonctionnement interm. 10% max. de chaque minute d`utilisation.

Intermittierende Werte maximal 10% von jeder Betriebsminute.

Capacidad de funcionamiento intermitente valida para 10% por cada minuto.

Performance data based on testing using 10W40 oil with a viscosity of 200 SUS at 54° C (130° F.). Performance data is typical. Actual data may vary slightly from one production motor to another.

Les donnees sur les performances sont basees sur des tests utilisant de l'huile 10W40 d'une viscosite de 200 SUS a 54°C (130°F). Ces donnees correspondent a des situations typiques. Les donnees reelles peuvent varier legerement d'un moteur de production a l'autre.

Leistungsdaten sind gemessen mit SAE 10W40 bei einer Viskositaet von 43,1 Cst bei 54°C. Geringfuegige Abweichungen von den Katalogdaten sind moeglich.

Datos tecnicos obtenidos con aceite 10W40 de 200 SUS de viscosidad a 54°C (130°F). Los datos proporcionados son valores tipcos. Los valores exactos reales podrian tener una pequena variacion entre distintos motores.

TS 0195

11.9 cu in / rev

PRESSURE (PSID)

	250	500	750	1000	1200
.5	318 **9.4**	701 **8.9**	1095 **8.5**	1504 **7.7**	1780 **6.8**
1	336 **19**	720 **18**	1119 **17**	1535 **17**	1807 **17**
2	351 **38**	744 **38**	1152 **37**	1579 **36**	1854 **36**
3	363 **58**	760 **57**	1172 **56**	1602 **55**	1882 **54**
4	355 **76**	756 **76**	1173 **75**	1610 **74**	1890 **73**
5	341 **95**	744 **95**	1166 **94**	1610 **93**	1886 **92**
7	300 **135**	705 **134**	1128 **132**	1575 **131**	1850 **130**
9	241 **173**	646 **172**	1069 **170**	1516 **169**	1791 **168**
12	142 **232**	543 **230**	961 **229**	1398 **227**	1677 **226**
15	9 **288**	409 **287**	824 **286**	1256 **284**	1539 **283**

Flow (GPM)

TORQUE (LB IN) 1677
SPEED (RPM) 226

195 cc / rev

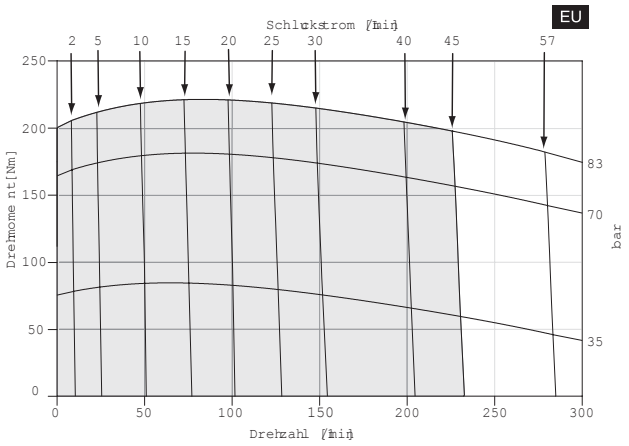

TS 0230

13.9 cu in / rev

PRESSURE (PSID)

	250	500	750	1000	1100
.5	373 **8.3**	806 **8.2**	1248 **7.8**	1714 **7.2**	1836 **6.9**
1	382 **16.6**	820 **16.4**	1267 **15.8**	1733 **15.1**	1865 **14.8**
2	409 **33**	850 **32**	1298 **32**	1768 **31**	1899 **31**
3	414 **49**	859 **49**	1316 **48**	1802 **47**	1919 **47**
4	408 **66**	854 **65**	1323 **65**	1816 **64**	1938 **64**
5	383 **83**	845 **82**	1318 **81**	1821 **80**	1943 **79**
7	338 **113**	811 **114**	1292 **113**	1797 **112**	1938 **111**
9	261 **147**	747 **147**	1237 **146**	1738 **145**	1899 **144**
12	111 **199**	615 **199**	1120 **197**	1626 **194**	1800 **193**
15		479 **246**	987 **244**	1473 **241**	1650 **240**

Flow (GPM)

TORQUE (LB IN) 1899
SPEED (RPM) 144

228 cc / rev

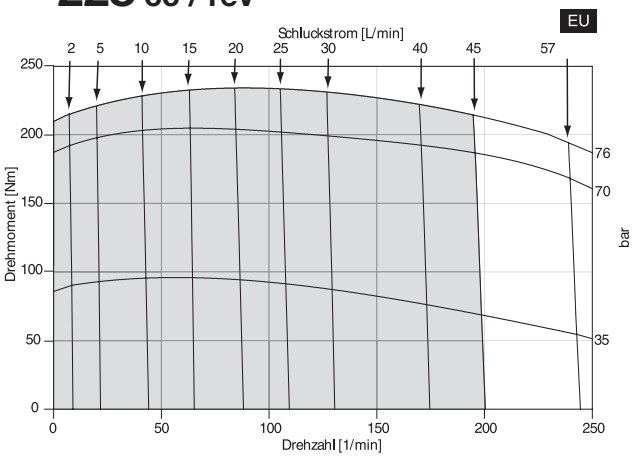

☐ Cont. ☐ Int.

Intermittent operation rating applies to 10% of every minute.

Fonctionnement interm. 10% max. de chaque minute d`utilisation.

Intermittierende Werte maximal 10% von jeder Betriebsminute.

Capacidad de funcionamiento intermitente valida para 10% por cada minuto.

Performance data based on testing using 10W40 oil with a viscosity of 200 SUS at 54° C (130° F.). Performance data is typical. Actual data may vary slightly from one production motor to another.

Les donnees sur les performances sont basees sur des tests utilisant de l'huile 10W40 d'une viscosite de 200 SUS a 54°C (130°F). Ces donnees correspondent a des situations typiques. Les donnees reelles peuvent varier legerement d'un moteur de production a l'autre.

Leistungsdaten sind gemessen mit SAE 10W40 bei einer Viskositaet von 43,1 Cst bei 54°C. Geringfuegige Abweichungen von den Katalogdaten sind moeglich.

Datos tecnicos obtenidos con aceite 10W40 de 200 SUS de viscosidad a 54°C (130°F). Los datos proporcionados son valores tipcos. Los valores exactos reales podrian tener una pequena variacion entre distintos motores.

TS 0260

15.9 cu in / rev

PRESSURE (PSID)

Flow (GPM)	250	500	750	1000
.5	399 **7.2**	915 **6.9**	1431 **6.4**	1948 **6.0**
1	412 **14.5**	936 **14.0**	1460 **13.6**	1984 **13.1**
2	419 **29.0**	956 **28.3**	1493 **27.6**	2030 **26.8**
3	427 **43**	971 **43**	1516 **42**	2060 **41**
4	412 **58**	966 **57**	1521 **57**	2076 **56**
5	401 **71**	961 **71**	1521 **71**	2081 **70**
7	348 **101**	915 **100**	1483 **100**	2050 **99**
9	271 **130**	844 **129**	1416 **128**	1989 **128**
12	133 **174**	706 **173**	1278 **172**	1851 **171**
15		547 **216**	1117 **215**	1687 **214**

TORQUE (LB IN) 1851
SPEED (RPM) 171

260 cc / rev

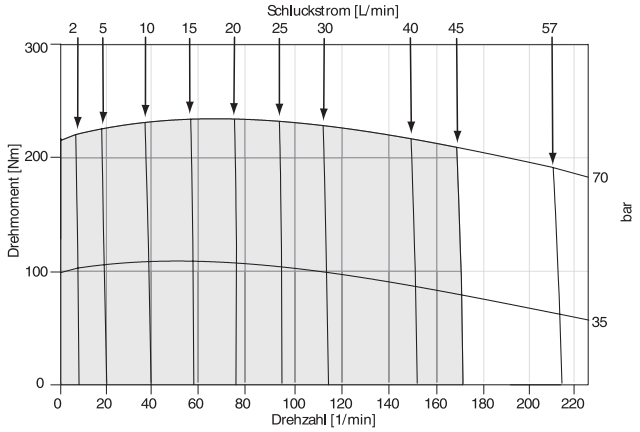

TS 0295

17.9 cu in / rev

PRESSURE (PSID)

Flow (GPM)	250	500	750	900
.5	384 **6.4**	1048 **6.0**	1713 **5.3**	2111 **4.9**
1	394 **12.6**	1068 **12.2**	1742 **11.7**	2146 **11.4**
2	397 **25.6**	1093 **25.1**	1788 **24.6**	2205 **24.3**
3	406 **39**	1107 **38**	1809 **37**	2229 **36**
4	397 **50**	1107 **50**	1818 **49**	2244 **49**
5	365 **64**	1088 **63**	1810 **62**	2244 **61**
7	316 **90**	1038 **89**	1761 **88**	2195 **87**
9	223 **115**	955 **114**	1687 **113**	2126 **112**
12	60 **154**	792 **153**	1524 **151**	1964 **150**
15		605 **191**	1325 **189**	1757 **188**

TORQUE (LB IN) 2126
SPEED (RPM) 112

293 cc / rev

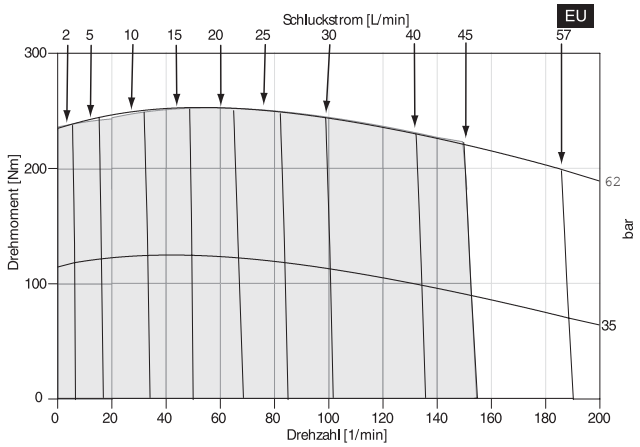

☐ Cont. ☐ Int.

Intermittent operation rating applies to 10% of every minute.

Fonctionnement interm. 10% max. de chaque minute d`utilisation.

Intermittierende Werte maximal 10% von jeder Betriebsminute.

Capacidad de funcionamiento intermitente valida para 10% por cada minuto.

Performance data based on testing using 10W40 oil with a viscosity of 200 SUS at 54° C (130° F.). Performance data is typical. Actual data may vary slightly from one production motor to another.

Les donnees sur les performances sont basees sur des tests utilisant de l'huile 10W40 d'une viscosite de 200 SUS a 54°C (130°F). Ces donnees correspondent a des situations typiques. Les donnees reelles peuvent varier legerement d'un moteur de production a l'autre.

Leistungsdaten sind gemessen mit SAE 10W40 bei einer Viskositaet von 43,1 Cst bei 54°C. Geringfuegige Abweichungen von den Katalogdaten sind moeglich.

Datos tecnicos obtenidos con aceite 10W40 de 200 SUS de viscosidad a 54°C (130°F). Los datos proporcionados son valores tipcos. Los valores exactos reales podrian tener una pequena variacion entre distintos motores.

003 TS.indd, js

TS 0330

20.0 cu in / rev

PRESSURE (PSID)

Flow (GPM)	250	500	600
.5	481 **5.7**	1201 **5.1**	1489 **4.6**
1	469 **11.4**	1229 **11.1**	1533 **10.6**
2	416 **22.8**	1258 **22.5**	1594 **21.7**
3	377 **35**	1270 **34**	1627 **33**
4	323 **46**	1266 **45**	1643 **44**
5	252 **57**	1245 **56**	1643 **56**
7	154 **80**	1189 **79**	1602 **78**
9	55 **103**	1099 **102**	1517 **102**
12		913 **137**	1331 **136**
15		706 **171**	1087 **170**

TORQUE (LB IN) 1517
SPEED (RPM) 102

328 cc / rev

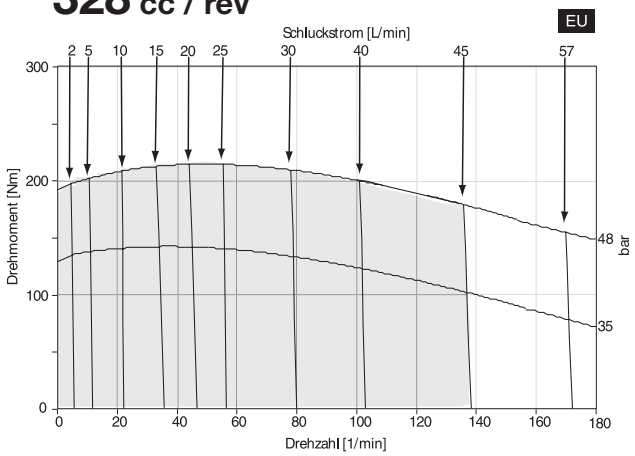

TS 0365

22.6 cu in / rev

PRESSURE (PSID)

Flow (GPM)	250	500	600
.5	680 **5.1**	1405 **4.9**	1650 **4.6**
1	688 **10.2**	1438 **9.8**	1703 **9.7**
2	686 **20.4**	1479 **19.8**	1756 **19.6**
3	692 **30.3**	1495 **30.2**	1784 **30.0**
4	720 **40.2**	1487 **39.9**	1796 **39.8**
5	703 **50.6**	1466 **50.0**	1772 **49.8**
7	572 **70.6**	1373 **70.1**	1695 **69.9**
9	440 **91.4**	1251 **90.3**	1572 **89.9**
12	189 **121.5**	1014 **120.9**	1344 **120.7**
15		701 **151.1**	1022 **150.9**

TORQUE (LB IN) 1695
SPEED (RPM) 69.9

370 cc / rev

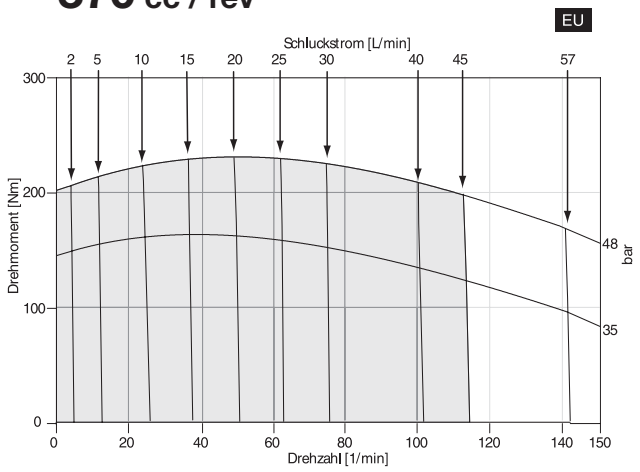

☐ Cont. ☐ Int.

Intermittent operation rating applies to 10% of every minute.

Fonctionnement interm. 10% max. de chaque minute d`utilisation.

Intermittierende Werte maximal 10% von jeder Betriebsminute.

Capacidad de funcionamiento intermitente valida para 10% por cada minuto.

Performance data based on testing using 10W40 oil with a viscosity of 200 SUS at 54° C (130° F.). Performance data is typical. Actual data may vary slightly from one production motor to another.

Les donnees sur les performances sont basees sur des tests utilisant de l'huile 10W40 d'une viscosite de 200 SUS a 54°C (130°F). Ces donnees correspondent a des situations typiques. Les donnees reelles peuvent varier legerement d'un moteur de production a l'autre.

Leistungsdaten sind gemessen mit SAE 10W40 bei einer Viskositaet von 43,1 Cst bei 54°C. Geringfuegige Abweichungen von den Katalogdaten sind moeglich.

Datos tecnicos obtenidos con aceite 10W40 de 200 SUS de viscosidad a 54°C (130°F). Los datos proporcionados son valores tipcos. Los valores exactos reales podrian tener una pequena variacion entre distintos motores.

003 TS.indd, js

Parker Hannifin Corporation
Hydraulic Pump/Motor Division
Greeneville, Tennessee, USA

TS 0390

15.9 cu in / rev

	PRESSURE (PSID) 250	500	600
.5	604 **4.5**	1324 **4.0**	1492 **3.8**
1	640 **9.3**	1356 **9.2**	1540 **9.0**
2	690 **18.6**	1408 **18.1**	1608 **17.9**
3	700 **28.4**	1440 **28.1**	1664 **27.7**
4	705 **37.5**	1452 **37.0**	1692 **36.8**
5	715 **48.1**	1444 **47.1**	1712 **46.8**
7	642 **67.2**	1392 **66.2**	1692 **65.8**
9	496 **85.6**	1296 **85.1**	1616 **84.9**
12	292 **115.9**	1092 **114.5**	1412 **113.9**
15	62 **144.1**	832 **143.1**	1140 **142.7**

Flow (GPM)

TORQUE (LB IN) 1616
SPEED (RPM) 84.9

392 cc / rev

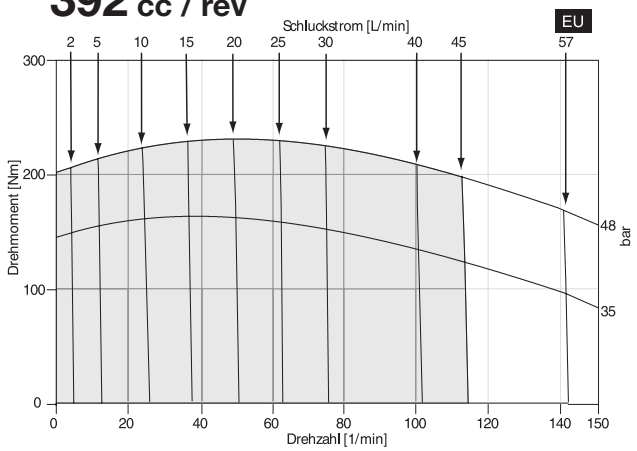

☐ Cont. ☐ Int.

Intermittent operation rating applies to 10% of every minute.

Fonctionnement interm. 10% max. de chaque minute d`utilisation.

Intermittierende Werte maximal 10% von jeder Betriebsminute.

Capacidad de funcionamiento intermitente valida para 10% por cada minuto.

Performance data based on testing using 10W40 oil with a viscosity of 200 SUS at 54° C (130° F.). Performance data is typical. Actual data may vary slightly from one production motor to another.

Les donnees sur les performances sont basees sur des tests utilisant de l'huile 10W40 d'une viscosite de 200 SUS a 54°C (130°F). Ces donnees correspondent a des situations typiques. Les donnees reelles peuvent varier legerement d'un moteur de production a l'autre.

Leistungsdaten sind gemessen mit SAE 10W40 bei einer Viskositaet von 43,1 Cst bei 54°C. Geringfuegige Abweichungen von den Katalogdaten sind moeglich.

Datos tecnicos obtenidos con aceite 10W40 de 200 SUS de viscosidad a 54°C (130°F). Los datos proporcionados son valores tipcos. Los valores exactos reales podrian tener una pequena variacion entre distintos motores.

A 5/16-24 straight thread o-ring drain port is provided in the flange of the front housing. This port is to be connected to the reservoir. The purpose of this port is to relieve pressure in the polypropylene rear cover in the rare event of a motor section seal leak.

Maximum side load 300# at 1 inch from mounting face.

Shaft torque is limited to 2000 in-lbs since it is made from 316 stainless steel 1" keyed shaft. Other shaft types or shaft taper locks will increase allowable shaft torque.

Code: FS

4 Bolt,
7/8"-14 SAE
O-Ring

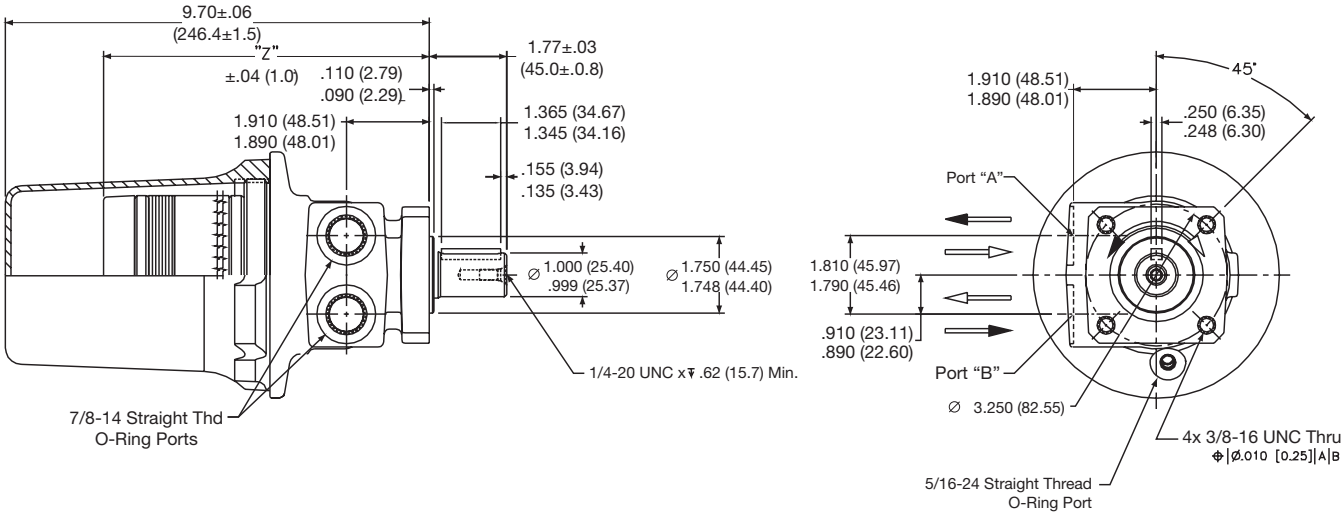

* Do not plug 5/16-24 drain port

Code FS disp.	0036	0045	0050	0065	0080	0100	0130	0165	0195	0230	0260	0295	0330	0365	0390
Weight/Gewicht kg	8.3	8.3	8.4	8.5	8.7	8.8	9.0	9.3	9.8	9.9	10.1	10.3	10.7	11.0	11.1
Poids/Peso (lb)	(18.3)	(18.4)	(18.5)	(18.8)	(19.1)	(19.4)	(19.9)	(20.6)	(21.5)	(21.8)	(22.3)	(22.8)	(23.5)	(24.2)	(24.5)
Length"Z" mm	164.4	165.5	167.0	170.2	173.3	176.5	182.9	189.2	195.6	201.9	208.3	214.6	221.0	229.6	233.7
"Z" (in)	(6.47)	(6.52)	(6.57)	(6.70)	(6.82)	(6.95)	(7.20)	(7.45)	(7.70)	(7.95)	(8.20)	(8.45)	(8.70)	(9.04)	(9.20)

English equivalents for metric specifications are shown in ( ).

15 Displacements **15 Schluckvolumen** **15 Cylindrée** **15 Despazamientos**		(2.2 – 24.0 in³/rev) **36 . . . 390 cm³/rev**
	Cont	**Int**
Maximum Pressure **Eingangsdruck** **Chaute de pression max.** **Presion Maxima**	(2030 psid) **. . .140 bar**	(2750 psid) **. . .190 bar**
Maximum Oil Flow **Schluckstrom** **Débit d'huile** **Caudal Maximo de Aceite**		(20 gpm) **. . . 75 lpm**
Maximum Speed **Drehzahl** **Vitesse de rotation** **Velocidad Maxima**		(1000 rpm) **1000 rpm**
	Cont	**Int**
Maximum Torque **Max Drehmoment** **Couple Maxi** **Torque Maximo**	(4139 lb in) **467 Nm**	(5728 lb in) **648 Nm**
Maximum Side Load at Key **Seitenlast** **Charges latèrales** **Carga Maxima Lateral**		(1500 lb) **. . . 6650 N**

An Improved Medium Duty Low Speed, High Torque Motor

This medium duty motor has higher pressure ratings than the TB motor, for applications requiring higher torque. Robust roller bearings withstand higher side loads and are suitable for chain and sprocket shaft connections. It uses high pressure shaft seals, robust roller bearings and high flow shaft seal cooling.

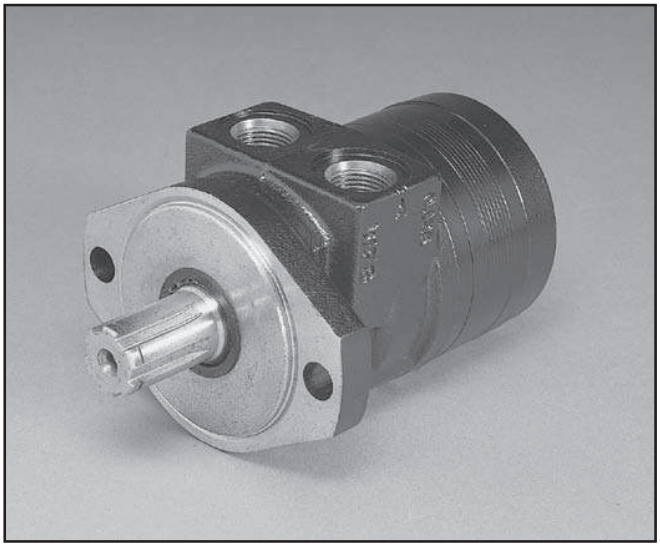

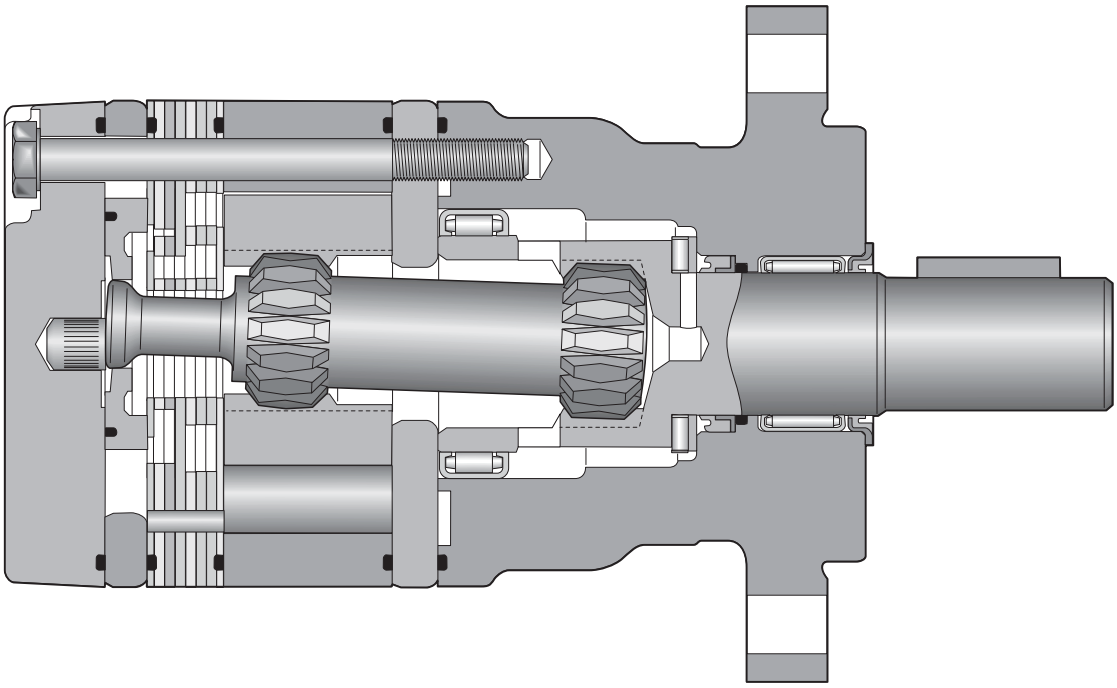

TE

Series

XXXX

Displacement
Schluckvolumen
Cylindrée
Desplazamiento

Code	cm³/U cm³/tr cm³/giro	in ³/rev
0036	36 /	2.2
0045	41 /	2.5
0050	49 /	3.0
0065	65 /	4.0
0080	82 /	5.0
0100	98 /	6.0
0130	130 /	8.0
0165	163 /	10.0
0195	195 /	11.9
0230	228 /	13.9
0260	260 /	15.9
0295	293 /	17.9
0330	328 /	20.0
0365	370 /	22.6
0390	392 /	24.0

*Not available with port codes M & N

X

Mounting
Gehäuse
Carter
Montaje

Code	Mounting
A	SAE "A" 2 Bolt,
F	4 Bolt w/3/8-16 UNC
M	Magneto
C	SAE "A" 2 Bolt, Long Pilot
B	SAE "B" 2 Bolt
L*	Wheel Mount
N	Midmount
U*	Wheel Mount 7/8-14 SAE

X

Ports
Anschluß
Plan de raccordement
Lumbreras

Code	Ports
M	5/16-18 UNC Manifold
P	1/2-14 NPTF
S	7/8-14 SAE
W	G 1/2 BSPP
N	M8 Manifold

Rear Ports
Endanschluß
Alimentazione Laterale
Orifices arriér

Code	Rear Ports
R	3/4-16 SAE O-ring Axial
Y	G 1/2 BSPP Axial

For other available options, see pages 102–103.

XX

Shaft
Welle
Arbre
Eje

Code	Shaft
09	1" Straight w/0.38" Crosshole 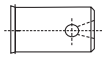
10	1" Keyed,
11	1" 6B Spline
12	1" Tapered 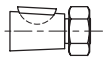
13	Long 1" Keyed
21	1" Keyed; Corrosion Resistant
25	1" Tapered 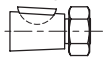
26	25mm Keyed w/ 8mm Key
28	7/8" 13 Tooth Spline
41	Long 6B Spline 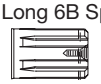
70	1" Keyed; Stainless Steel

0

Rotation
Drehrichtung
Direction de rotation
Rotacion

Code	Rotation
0	Standard
1	Reverse Timed Manifold 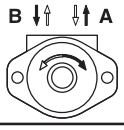

Code	Rear Port Rotation
0	Standard 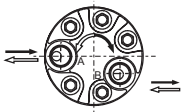
1	Reverse Timed Manifold 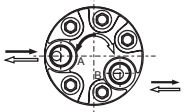

Rotation viewed from shaft end.

XXXX

Options
Opciones

Code	Options
AAAA	Black Paint
AAAB	No Paint
AAAC	Double Paint
AAAF	Castle Nut, Black Paint
AABP	Castle Nut, No Paint
AAAG	Viton Seals, Black Paint
AAAH	Viton Seals, No Paint
AAAJ	Vespel Commutator Seal, Black Paint
AAFG	Vespel Commutator Seal, No Paint
AABJ*	Free Running Rotorset, Black Paint
AABK*	Free Running Rotorset, No Paint

*Not applicable to TE0365 or TE0390 displacements

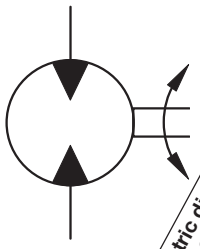

Motor Series TE	Geometric displacement / Geom. Schluckvolumen / Cylindrée / Despazamientos	Max. speed @ Max. intermittent flow / Max. Drehzahl Intermittierender Betrieb: / Vitesse de rotation maxi / Velocidad maxima a caudal intermitente maximo	Max. oil flow / Max. Schluckstrom / Débit d'huile maxi / Caudal Maximo de Aceite		Max. Differential Pressure / Max. Druckgefälle / Chute de pression maxi / Presion diferencial maxima		Max. supply pressure / Max. Eingangsdruck / Pression maxi entrée / Presion maxima de alimentacion	Max. torque / Max. Drehmoment / Couple maxi / Torque Maximo		Max. performance / Max. Leistungabgabe / Puissance de sortie maxi / Maximo redinmiento	Min. starting torque / Min. Anlaufmoment / Couple min. fourni au dé manrage / Torque minimo de arranque	
	cm³/rev in³/rev	***Int*** rev/min	***cont / int**** **l/min** g/min		***cont / int**** **bar** psid		***max*** **bar** psig	***cont / int**** **Nm** lb-in		***max*** **KW** HP	***cont / int**** **Nm** lb-in	
TE 0036	**36** 2.2	1141	**34** 9	**42** 11	**140** 2030	**190** 2750	**200** 2900	**54.6** 483	**71.1** 630	**8.5** 11.4	**44** 389	**52** 460
TE 0045	**41** 2.5	1024	**34** 9	**42** 11	**140** 2030	**190** 2750	**200** 2900	**71** 624	**99** 876	**10.4** 13.9	**44** 411	**64** 565
TE 0050	**49** 3.0	1020	**34** 9	**50** 13	**140** 2030	**190** 2750	**200** 2900	**90** 796	**127** 1120	**12.8** 17.2	**72** 637	**98** 871
TE 0065	**65** 4.0	877	**45** 12	**57** 15	**140** 2030	**190** 2750	**200** 2900	**125** 1106	**176** 1558	**14.7** 19.8	**100** 885	**137** 1211
TE 0080	**82** 5.0	695	**45** 12	**57** 15	**140** 2030	**190** 2750	**200** 2900	**160** 1416	**220** 1947	**17.3** 23.2	**128** 1133	**171** 1515
TE 0100	**98** 6.0	582	**45** 12	**57** 15	**140** 2030	**190** 2750	**200** 2900	**190** 1682	**264** 2337	**17.4** 23.4	**152** 1345	**205** 1819
TE 0130	**130** 8.0	438	**45** 12	**57** 15	**140** 2030	**190** 2750	**200** 2900	**255** 2257	**352** 3116	**17.3** 23.2	**204** 1806	**274** 2423
TE 0165	**163** 10.0	348	**45** 12	**57** 15	**140** 2030	**190** 2750	**200** 2900	**310** 2744	**436** 3846	**17.0** 22.8	**248** 2195	**338** 2992
TE 0195	**195** 11.9	292	**45** 12	**57** 15	**140** 2030	**190** 2750	**200** 2900	**390** 3452	**528** 4673	**17.4** 23.4	**312** 2762	**411** 3637
TE 0230	**228** 13.9	328	**57** 15	**75** 20	**120** 1740	**165** 2400	**200** 2900	**380** 3363	**514** 4554	**17.7** 23.8	**304** 2691	**411** 3637
TE 0260	**260** 15.9	287	**57** 15	**75** 20	**110** 1595	**155** 2250	**200** 2900	**400** 3540	**550** 4870	**16.7** 22.4	**320** 2832	**449** 3977
TE 0295	**293** 17.9	256	**57** 15	**75** 20	**100** 1450	**145** 2100	**200** 2900	**428** 3784	**582** 5180	**15.7** 21.0	**328** 2903	**445** 3939
TE 0330	**328** 20.0	228	**57** 15	**75** 20	**100** 1450	**135** 1950	**200** 2900	**443** 3926	**600** 5312	**14.8** 19.8	**344** 3045	**453** 4014
TE 0365	**370** 22.6	203	**57** 15	**75** 20	**95** 1378	**125** 1825	**200** 2900	**467** 4133	**648** 5728	**13.6** 18.2	**373** 3301	**477** 4223
TE 0390	**392** 24.0	191	**57** 15	**75** 20	**85** 1233	**120** 1740	**200** 2900	**445** 3935	**628** 5562	**12.5** 16.8	**348** 3080	**462** 4090

Performance data based on testing using 10W40 oil with a viscosity of 43,1 cSt. (200 SUS) at 54° C (130° F.). Performance data is typical. Actual data may vary slightly from one production motor to another.

Les donnees sur les performances sont basees sur des tests utilisant de l'huile 10W40 d'une viscosite de 200 SUS a 54°C (130°F). Ces donnees correspondent a des situations typiques. Les donnees reelles peuvent varier legerement d'un moteur de production a l'autre.

Leistungsdaten sind gemessen mit SAE 10W40 bei einer Viskositaet von 43,1 Cst bei 54°C. Geringfuegige Abweichungen von den Katalogdaten sind moeglich.

Datos tecnicos obtenidos con aceite 10W40 de 200 SUS de viscosidad a 54°C (130°F). Los datos proporcionados son valores tipcos. Los valores exactos reales podrian tener una pequena variacion entre distintos motores.

* Intermittent operation rating applies to 10% of every minute.
Intermittierende Werte maximal 10% von jeder Betriebsminute.
Fonctionnement interm. 10% max. de chaque minute d`utilisation.
Capacidad de funcionamiento intermitente valida para 10% por cada minuto.

TE 0036

2.2 cu in / rev

PRESSURE (PSID)

Flow (GPM)	500	1000	1500	2000	2750
.5	111 **44**	225 **37**	346 **25**	470 **15**	
1	113 **96**	231 **86**	353 **77**	480 **67**	670 **40**
2	115 **202**	239 **190**	365 **179**	495 **169**	691 **140**
3	113 **307**	241 **296**	371 **282**	505 **269**	709 **240**
4	109 **411**	241 **397**	373 **384**	509 **371**	722 **340**
5	103 **516**	237 **501**	371 **486**	509 **470**	726 **440**
7	87 **724**	225 **709**	361 **691**	501 **674**	711 **641**
9	72 **933**	208 **916**	344 **897**	482 **877**	672 **841**
11	54 **1142**	190 **1117**	326 **1096**	462 **1075**	629 **1045**

TORQUE (LB IN) 711
SPEED (RPM) 641

36 cc / rev

EU

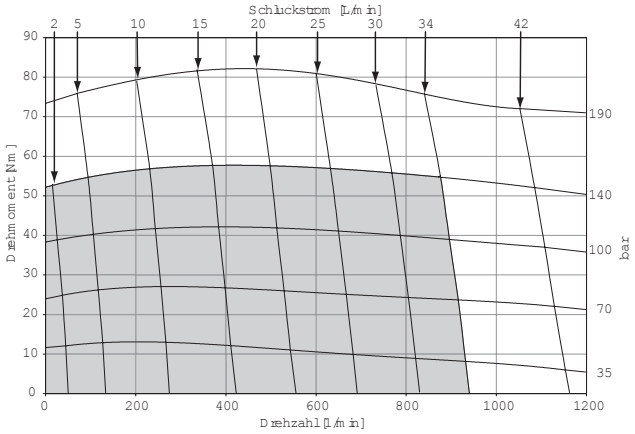

TE 0045

2.5 cu in / rev

PRESSURE (PSID)

Flow (GPM)	500	1000	1500	2000	2750
.5	121 **41**	272 **35**	425 **28**	579 **22**	808 **10**
1	126 **86**	282 **79**	440 **72**	599 **65**	832 **50**
2	128 **176**	288 **168**	452 **161**	619 **152**	867 **134**
3	126 **266**	287 **257**	453 **249**	620 **239**	868 **221**
4	123 **356**	285 **346**	454 **337**	624 **326**	876 **306**
5	119 **446**	281 **435**	451 **425**	624 **413**	877 **391**
7	105 **625**	270 **613**	440 **601**	615 **587**	872 **562**
9	94 **805**	259 **791**	430 **777**	605 **761**	862 **733**
11	81 **983**	246 **967**	415 **950**	590 **930**	849 **896**

TORQUE (LB IN) 872
SPEED (RPM) 562

41 cc / rev

EU

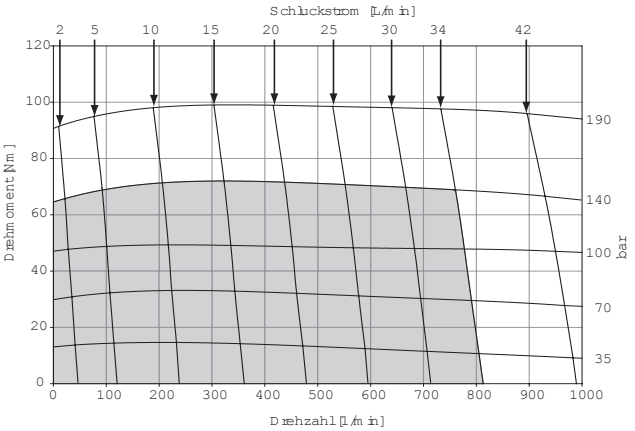

☐ Cont. ☐ Int.

Intermittent operation rating applies to 10% of every minute.

Fonctionnement interm. 10% max. de chaque minute d`utilisation.

Performance data based on testing using 10W40 oil with a viscosity of 200 SUS at 54° C (130° F.). Performance data is typical. Actual data may vary slightly from one production motor to another.

Les donnees sur les performances sont basees sur des tests utilisant de l'huile 10W40 d'une viscosite de 200 SUS a 54°C (130°F). Ces donnees correspondent a des situations typiques. Les donnees reelles peuvent varier legerement d'un moteur de production a l'autre.

Intermittierende Werte maximal 10% von jeder Betriebsminute.

Capacidad de funcionamiento intermitente valida para 6 segundos por cada minuto.

Leistungsdaten sind gemessen mit SAE 10W40 bei einer Viskositaet von 43,1 Cst bei 54°C. Geringfuegige Abweichungen von den Katalogdaten sind moeglich.

Datos tecnicos obtenidos con aceite 10W40 de 200 SUS de viscosidad a 54°C (130°F). Los datos proporcionados son valores tipcos. Los valores exactos reales podrian tener una pequena variacion entre distintos motores.

TE 0050

3.0 cu in / rev PRESSURE (PSID)

Flow (GPM)	500	1000	1500	2000	2750
.5	146 **32**	327 **23**	513 **13**	705 **6**	
1	159 **69**	345 **60**	537 **50**	727 **41**	1005 **17**
2	170 **145**	364 **136**	563 **124**	764 **113**	1057 **85**
3	167 **225**	363 **214**	565 **203**	768 **191**	1066 **163**
4	169 **294**	367 **282**	574 **271**	784 **260**	1092 **231**
5	165 **363**	365 **349**	574 **339**	785 **327**	1097 **297**
7	156 **501**	357 **485**	568 **474**	782 **460**	1096 **430**
9	141 **640**	342 **621**	555 **609**	771 **594**	1087 **561**
13	88 **904**	295 **881**	503 **869**	722 **851**	1036 **819**

TORQUE (LB IN) 1096
SPEED (RPM) 430

49 cc / rev

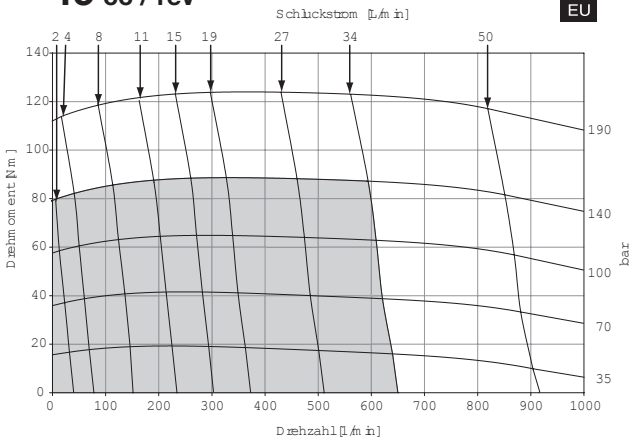

TE 0065

4.0 cu in / rev PRESSURE (PSID)

Flow (GPM)	500	1000	1500	2000	2750
.5	220 **24**	481 **17**	743 **11**	1004 **3**	
1	232 **52**	498 **45**	763 **38**	1025 **31**	1411 **19**
2	239 **109**	512 **102**	789 **94**	1066 **85**	1469 **65**
3	238 **167**	512 **159**	790 **151**	1068 **141**	1474 **120**
4	237 **224**	514 **215**	795 **207**	1078 **197**	1492 **179**
5	233 **279**	511 **271**	794 **262**	1080 **252**	1502 **234**
7	216 **386**	497 **376**	783 **366**	1072 **356**	1497 **336**
9	195 **494**	477 **483**	764 **472**	1054 **460**	1481 **439**
12	152 **654**	435 **641**	724 **629**	1017 **617**	1445 **596**
15	102 **802**	388 **789**	676 **776**	969 **763**	1391 **740**

TORQUE (LB IN) 1497
SPEED (RPM) 336

65 cc / rev

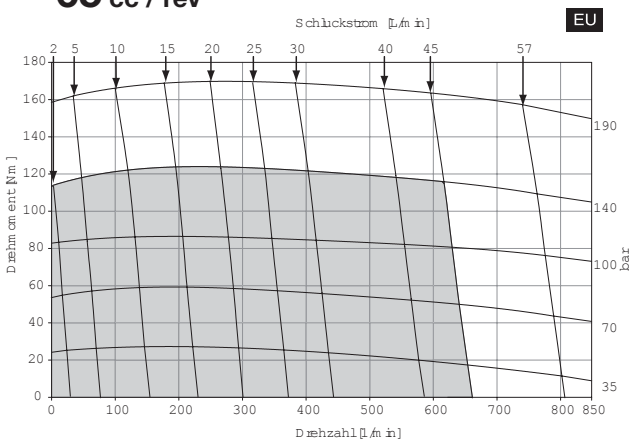

☐ Cont. ☐ Int.

Intermittent operation rating applies to 10% of every minute.

Fonctionnement interm. 10% max. de chaque minute d`utilisation.

Performance data based on testing using 10W40 oil with a viscosity of 200 SUS at 54° C (130° F.). Performance data is typical. Actual data may vary slightly from one production motor to another.

Les donnees sur les performances sont basees sur des tests utilisant de l'huile 10W40 d'une viscosite de 200 SUS a 54°C (130°F). Ces donnees correspondent a des situations typiques. Les donnees reelles peuvent varier legerement d'un moteur de production a l'autre.

Intermittierende Werte maximal 10% von jeder Betriebsminute.

Capacidad de funcionamiento intermitente valida para 6 segundos por cada minuto.

Leistungsdaten sind gemessen mit SAE 10W40 bei einer Viskositaet von 43,1 Cst bei 54°C. Geringfuegige Abweichungen von den Katalogdaten sind moeglich.

Datos tecnicos obtenidos con aceite 10W40 de 200 SUS de viscosidad a 54°C (130°F). Los datos proporcionados son valores tipcos. Los valores exactos reales podrian tener una pequena variacion entre distintos motores.

TE 0080 — 5.0 cu in / rev

PRESSURE (PSID)

Flow (GPM)	500	1000	1500	2000	2750
.5	261 **17**	575 **8**			
1	276 **39**	596 **30**	918 **23**	1245 **13**	
2	290 **85**	631 **76**	974 **68**	1310 **56**	1784 **35**
3	291 **131**	633 **122**	978 **113**	1319 **101**	1819 **79**
4	293 **177**	642 **167**	995 **158**	1347 **146**	1854 **121**
5	290 **223**	641 **213**	999 **203**	1359 **191**	1884 **165**
7	273 **316**	628 **304**	989 **293**	1353 **280**	1890 **253**
9	249 **408**	603 **396**	966 **384**	1334 **370**	1873 **340**
12	197 **546**	551 **533**	916 **519**	1287 **504**	1827 **472**
15	136 **686**	494 **670**	857 **655**	1226 **638**	1762 **603**

TORQUE (LB IN) 1890
SPEED (RPM) 253

82 cc / rev

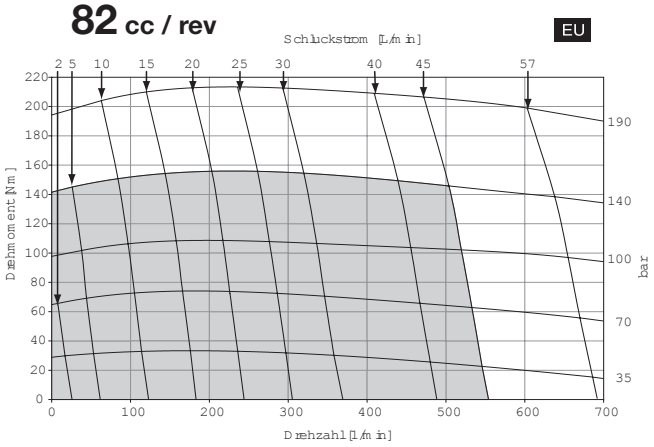

TE 0100 — 6.0 cu in / rev

PRESSURE (PSID)

Flow (GPM)	500	1000	1500	2000	2750
.5	315 **14**	687 **7**			
1	332 **33**	710 **26**	1083 **18**	1460 **9**	
2	348 **71**	751 **64**	1152 **55**	1541 **45**	2089 **27**
3	350 **109**	756 **102**	1160 **92**	1556 **83**	2138 **62**
4	353 **147**	768 **140**	1185 **130**	1596 **120**	2189 **99**
5	349 **186**	771 **178**	1197 **168**	1622 **158**	2235 **137**
7	330 **263**	759 **254**	1191 **244**	1624 **232**	2258 **209**
9	302 **340**	731 **330**	1167 **319**	1606 **307**	2246 **284**
12	243 **456**	671 **444**	1111 **433**	1555 **420**	2198 **394**
15	176 **572**	606 **558**	1042 **546**	1484 **533**	2121 **505**

TORQUE (LB IN) 2258
SPEED (RPM) 209

98 cc / rev

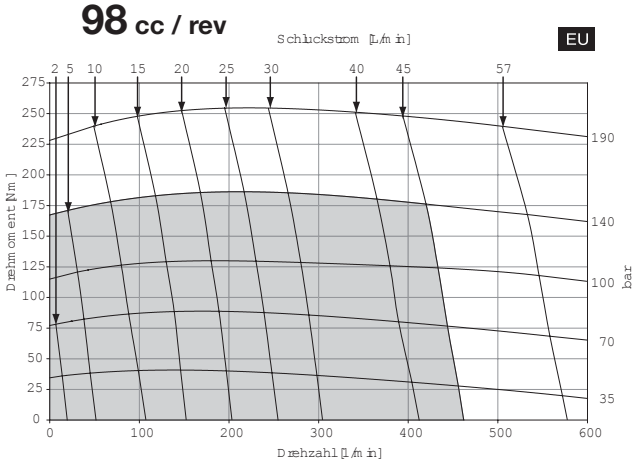

☐ Cont. ☐ Int.

Intermittent operation rating applies to 10% of every minute.

Fonctionnement interm. 10% max. de chaque minute d`utilisation.

Performance data based on testing using 10W40 oil with a viscosity of 200 SUS at 54° C (130° F.). Performance data is typical. Actual data may vary slightly from one production motor to another.

Les donnees sur les performances sont basees sur des tests utilisant de l'huile 10W40 d'une viscosite de 200 SUS a 54°C (130°F). Ces donnees correspondent a des situations typiques. Les donnees reelles peuvent varier legerement d'un moteur de production a l'autre.

Intermittierende Werte maximal 10% von jeder Betriebsminute.

Capacidad de funcionamiento intermitente valida para 6 segundos por cada minuto.

Leistungsdaten sind gemessen mit SAE 10W40 bei einer Viskositaet von 43,1 Cst bei 54°C. Geringfuegige Abweichungen von den Katalogdaten sind moeglich.

Datos tecnicos obtenidos con aceite 10W40 de 200 SUS de viscosidad a 54°C (130°F). Los datos proporcionados son valores tipcos. Los valores exactos reales podrian tener una pequena variacion entre distintos motores.

TE 0130

8.0 cu in / rev

PRESSURE (PSID)

Flow (GPM)	500	1000	1500	2000	2750
.5	445 **12**	962 **10**	1488 **7**	2018 **3**	
1	464 **27**	996 **24**	1525 **21**	2051 **17**	2835 **5**
2	482 **55**	1032 **53**	1584 **49**	2136 **44**	2940 **31**
3	483 **84**	1037 **81**	1594 **77**	2150 **72**	2961 **60**
4	483 **113**	1051 **110**	1619 **105**	2184 **100**	3015 **87**
5	478 **142**	1050 **138**	1625 **133**	2201 **128**	3050 **114**
7	450 **200**	1029 **195**	1613 **190**	2195 **183**	3054 **169**
9	414 **257**	993 **252**	1579 **247**	2166 **239**	3030 **224**
12	338 **344**	915 **338**	1503 **331**	2096 **323**	2961 **306**
15	252 **431**	827 **424**	1408 **416**	1996 **407**	2851 **389**

TORQUE (LB IN) 3054
SPEED (RPM) 169

130 cc / rev

EU

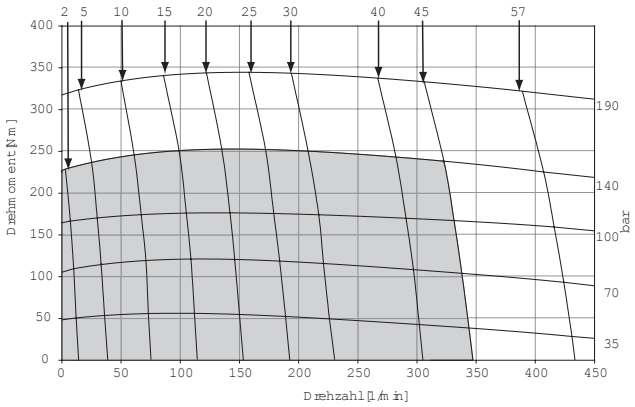

TE 0165

10.0 cu in / rev

PRESSURE (PSID)

Flow (GPM)	500	1000	1500	2000	2750
.5	552 **9**	1175 **7**	1813 **4**	2457 **3**	
1	574 **21**	1213 **18**	1856 **16**	2499 **12**	3465 **7**
2	597 **44**	1263 **41**	1938 **38**	2614 **33**	3604 **25**
3	600 **67**	1273 **64**	1955 **60**	2634 **55**	3628 **46**
4	603 **90**	1299 **87**	1997 **83**	2691 **78**	3705 **67**
5	597 **113**	1302 **109**	2015 **105**	2727 **100**	3767 **89**
7	569 **159**	1286 **155**	2009 **150**	2732 **144**	3791 **133**
9	523 **205**	1244 **201**	1976 **195**	2707 **189**	3773 **177**
12	429 **274**	1152 **269**	1890 **263**	2630 **256**	3701 **242**
15	316 **344**	1039 **338**	1769 **331**	2500 **323**	3568 **308**

TORQUE (LB IN) 3791
SPEED (RPM) 133

163 cc / rev

EU

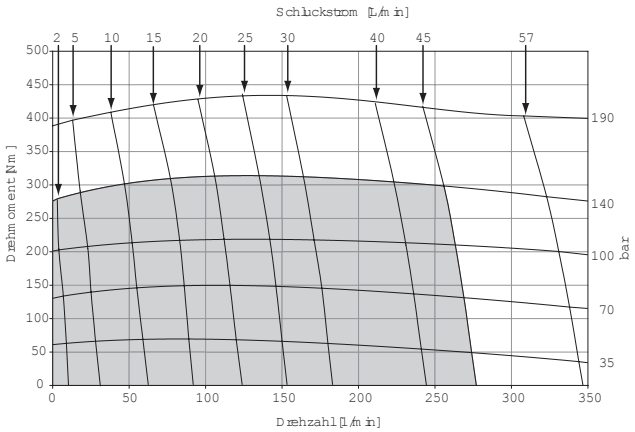

☐ Cont. ☐ Int.

Intermittent operation rating applies to 10% of every minute.

Fonctionnement interm. 10% max. de chaque minute d`utilisation.

Performance data based on testing using 10W40 oil with a viscosity of 200 SUS at 54° C (130° F.). Performance data is typical. Actual data may vary slightly from one production motor to another.

Les donnees sur les performances sont basees sur des tests utilisant de l'huile 10W40 d'une viscosite de 200 SUS a 54°C (130°F). Ces donnees correspondent a des situations typiques. Les donnees reelles peuvent varier legerement d'un moteur de production a l'autre.

Intermittierende Werte maximal 10% von jeder Betriebsminute.

Capacidad de funcionamiento intermitente valida para 6 segundos por cada minuto.

Leistungsdaten sind gemessen mit SAE 10W40 bei einer Viskositaet von 43,1 Cst bei 54°C. Geringfuegige Abweichungen von den Katalogdaten sind moeglich.

Datos tecnicos obtenidos con aceite 10W40 de 200 SUS de viscosidad a 54°C (130°F). Los datos proporcionados son valores tipcos. Los valores exactos reales podrian tener una pequena variacion entre distintos motores.

TE 0195

11.9 cu in / rev PRESSURE (PSID)

	500	1000	1500	2000	2750
.5	710 **8**	1519 **7**	2344 **5**	3182 **3**	
1	736 **18**	1558 **16**	2387 **14**	3221 **12**	4457 **6**
2	758 **37**	1596 **35**	2445 **33**	3302 **30**	4558 **22**
3	758 **56**	1604 **54**	2459 **51**	3315 **48**	4576 **39**
4	757 **75**	1618 **73**	2482 **70**	3346 **67**	4619 **56**
5	747 **95**	1615 **92**	2488 **89**	3360 **85**	4643 **74**
7	705 **133**	1586 **130**	2467 **127**	3343 **122**	4631 **111**
9	646 **172**	1528 **169**	2415 **165**	3300 **160**	4590 **147**
12	530 **230**	1408 **226**	2303 **221**	3197 **215**	4494 **201**
15	394 **288**	1273 **283**	2147 **278**	3027 **272**	4308 **256**

Flow (GPM)

TORQUE (LB IN) 4631
SPEED (RPM) 111

195 cc / rev

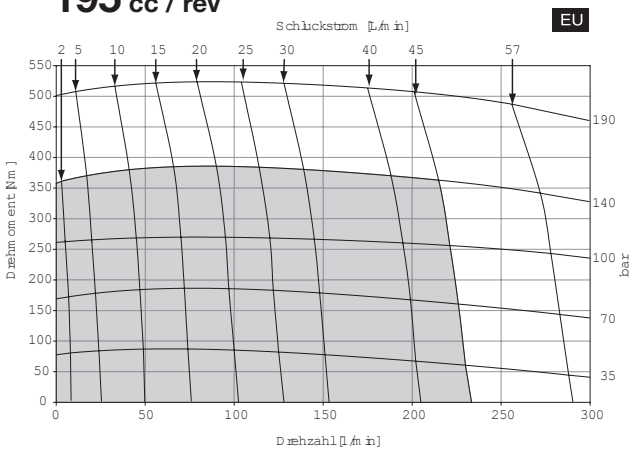

TE 0230

13.9 cu in / rev PRESSURE (PSID)

	500	1000	1500	1750	2000	2400
.5	761 **7**	1673 **6**	2614 **5**	3094 **4**	3584 **3**	4331 **3**
1	791 **15**	1712 **14**	2650 **13**	3128 **12**	3615 **11**	4366 **9**
2	819 **32**	1764 **30**	2726 **29**	3208 **28**	3692 **26**	4448 **24**
3	819 **48**	1771 **47**	2737 **45**	3226 **44**	3718 **42**	4482 **41**
4	821 **65**	1787 **63**	2765 **61**	3256 **60**	3750 **58**	4520 **56**
5	808 **81**	1786 **79**	2777 **77**	3277 **76**	3778 **74**	4554 **73**
7	770 **114**	1756 **112**	2755 **109**	3255 **108**	3760 **106**	4535 **104**
9	705 **147**	1699 **145**	2710 **142**	3216 **140**	3724 **138**	4496 **137**
12	581 **197**	1582 **194**	2595 **191**	3103 **189**	3617 **186**	4382 **183**
15	400 **247**	1409 **243**	2437 **239**	2949 **237**	3466 **235**	4216 **230**
20	64 **329**	1052 **325**	2067 **321**	2580 **319**	3100 **316**	3814 **311**

Flow (GPM)

TORQUE (LB IN) 1894
SPEED (RPM) 198

228 cc / rev

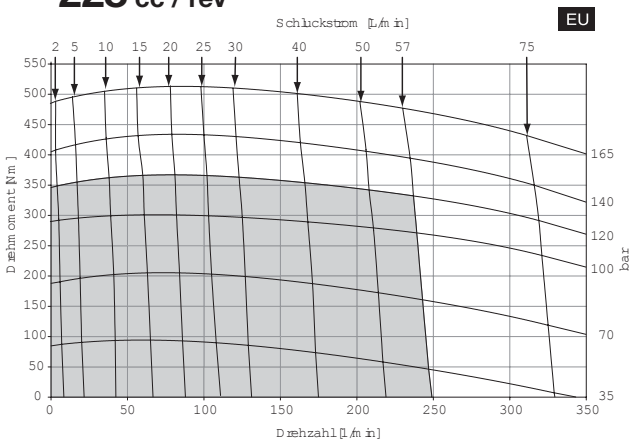

Cont. Int.

Intermittent operation rating applies to 10% of every minute.

Fonctionnement interm. 10% max. de chaque minute d`utilisation.

Performance data based on testing using 10W40 oil with a viscosity of 200 SUS at 54° C (130° F.). Performance data is typical. Actual data may vary slightly from one production motor to another.

Les donnees sur les performances sont basees sur des tests utilisant de l'huile 10W40 d'une viscosite de 200 SUS a 54°C (130°F). Ces donnees correspondent a des situations typiques. Les donnees reelles peuvent varier legerement d'un moteur de production a l'autre.

Intermittierende Werte maximal 10% von jeder Betriebsminute.

Capacidad de funcionamiento intermitente valida para 6 segundos por cada minuto.

Leistungsdaten sind gemessen mit SAE 10W40 bei einer Viskositaet von 43,1 Cst bei 54°C. Geringfuegige Abweichungen von den Katalogdaten sind moeglich.

Datos tecnicos obtenidos con aceite 10W40 de 200 SUS de viscosidad a 54°C (130°F). Los datos proporcionados son valores tipcos. Los valores exactos reales podrian tener una pequena variacion entre distintos motores.

TE 0260

15.9 cu in / rev PRESSURE (PSID)

	500	1000	1500	1650	2250
.5	908 **7**	1961 **6**	3048 **6**	3380 **6**	4631 **5**
1	938 **14**	2006 **13**	3099 **13**	3433 **12**	4692 **11**
2	971 **28**	2059 **27**	3165 **26**	3501 **26**	4779 **23**
3	968 **43**	2065 **42**	3177 **40**	3514 **39**	4797 **38**
4	970 **57**	2081 **56**	3203 **54**	3541 **53**	4837 **50**
5	957 **71**	2084 **70**	3219 **68**	3561 **67**	4870 **64**
7	907 **100**	2049 **98**	3198 **96**	3542 **95**	4856 **91**
9	837 **129**	1985 **127**	3143 **124**	3489 **123**	4799 **117**
12	692 **172**	1844 **169**	3016 **166**	3367 **164**	4671 **157**
15	489 **215**	1647 **212**	2830 **208**	3188 **206**	4494 **200**
20	129 **287**	1255 **283**	2418 **279**	2773 **277**	4031 **270**

Flow (GPM)

TORQUE (LB IN) 4856
SPEED (RPM) 91

260 cc / rev

EU

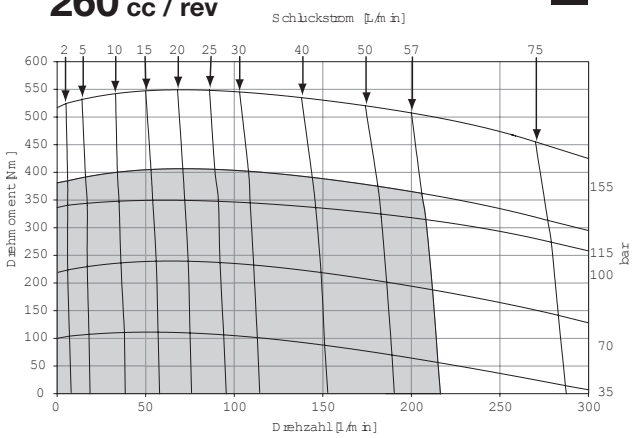

TE 0295

17.9 cu in / rev PRESSURE (PSID)

	500	1000	1500	1550	2100
.5	1014 **6**	2216 **5**	3453 **4**	3576 **4**	4900 **3**
1	1051 **12**	2270 **11**	3509 **10**	3633 **10**	4963 **8**
2	1088 **25**	2334 **24**	3600 **22**	3727 **22**	5092 **21**
3	1085 **38**	2338 **36**	3611 **35**	3739 **34**	5110 **33**
4	1085 **50**	2353 **49**	3639 **47**	3769 **47**	5152 **44**
5	1072 **63**	2352 **62**	3654 **60**	3784 **59**	5180 **57**
7	1019 **89**	2311 **87**	3624 **85**	3755 **84**	5159 **80**
9	939 **115**	2237 **113**	3561 **110**	3693 **110**	5098 **104**
12	776 **153**	2074 **151**	3403 **148**	3537 **147**	4931 **142**
15	545 **192**	1853 **189**	3184 **186**	3319 **185**	4689 **180**
20	126 **256**	1408 **253**	2697 **249**	2826 **249**	4099 **243**

Flow (GPM)

TORQUE (LB IN) 5159
SPEED (RPM) 80

293 cc / rev

EU

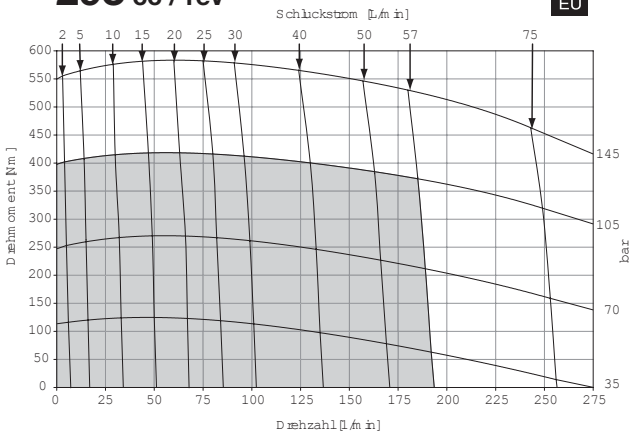

Cont. Int.

Intermittent operation rating applies to 10% of every minute.

Fonctionnement interm. 10% max. de chaque minute d`utilisation.

Performance data based on testing using 10W40 oil with a viscosity of 200 SUS at 54° C (130° F.). Performance data is typical. Actual data may vary slightly from one production motor to another.

Les donnees sur les performances sont basees sur des tests utilisant de l'huile 10W40 d'une viscosite de 200 SUS a 54°C (130°F). Ces donnees correspondent a des situations typiques. Les donnees reelles peuvent varier legerement d'un moteur de production a l'autre.

Intermittierende Werte maximal 10% von jeder Betriebsminute.

Capacidad de funcionamiento intermitente valida para 6 segundos por cada minuto.

Leistungsdaten sind gemessen mit SAE 10W40 bei einer Viskositaet von 43,1 Cst bei 54°C. Geringfuegige Abweichungen von den Katalogdaten sind moeglich.

Datos tecnicos obtenidos con aceite 10W40 de 200 SUS de viscosidad a 54°C (130°F). Los datos proporcionados son valores tipcos. Los valores exactos reales podrian tener una pequena variacion entre distintos motores.

004 TE.indd, js

Parker Hannifin Corporation
Hydraulic Pump/Motor Division
Greeneville, Tennessee, USA

TE 0330

20.0 cu in / rev PRESSURE (PSID)

Flow (GPM)	500	1000	1500	1950
.5	1184 **5**	2507 **5**	3722 **4**	5040 **3**
1	1218 **11**	2558 **10**	3772 **9**	5093 **8**
2	1258 **22**	2632 **21**	3867 **20**	5224 **19**
3	1251 **34**	2633 **32**	3879 **31**	5242 **30**
4	1249 **45**	2649 **44**	3909 **42**	5287 **40**
5	1229 **57**	2648 **55**	3926 **53**	5312 **50**
7	1162 **80**	2600 **78**	3898 **75**	5296 **71**
9	1064 **103**	2518 **100**	3829 **98**	5219 **93**
12	875 **137**	2333 **135**	3657 **131**	5026 **127**
15	621 **171**	2081 **169**	3420 **165**	4770 **160**
20	163 **229**	1576 **226**	2875 **222**	4129 **214**

TORQUE (LB IN) 5219
SPEED (RPM) 93

328 cc / rev

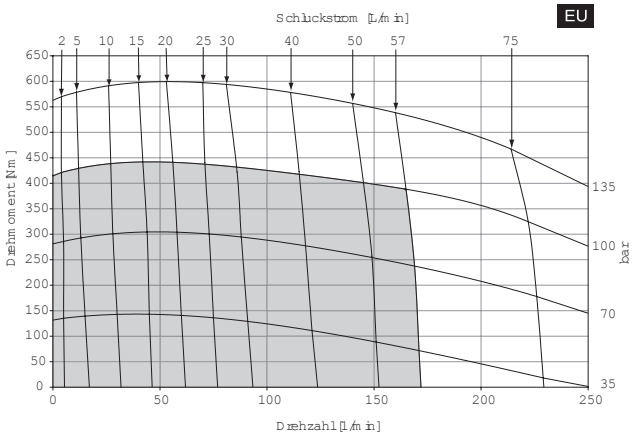

TE 0365

22.6 cu in / rev PRESSURE (PSID)

Flow (GPM)	500	1000	1325	1825
.5	1393 **5**	2942 **4**	3974 **4**	5539 **3**
1	1444 **10**	3005 **9**	4036 **8**	5599 **7**
2	1494 **20**	3090 **19**	4131 **18**	5714 **17**
3	1485 **30**	3082 **29**	4125 **28**	5709 **27**
4	1477 **40**	3089 **39**	4139 **37**	5728 **36**
5	1452 **50**	3075 **49**	4130 **47**	5719 **45**
7	1371 **70**	3009 **69**	4071 **67**	5654 **63**
9	1260 **90**	2899 **89**	3669 **87**	5543 **84**
12	1002 **121**	2658 **119**	3737 **117**	5283 **113**
15	700 **151**	2355 **149**	3432 **146**	4937 **142**
20	152 **201**	1776 **199**	2838 **196**	4228 **191**

TORQUE (LB IN) 5543
SPEED (RPM) 84

370 cc / rev

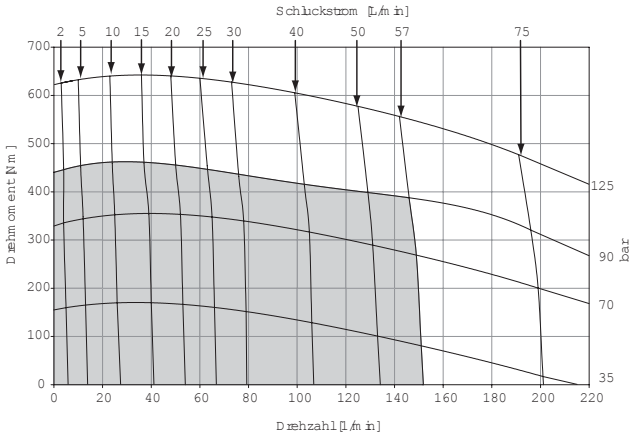

Cont. Int.

Intermittent operation rating applies to 10% of every minute.

Fonctionnement interm. 10% max. de chaque minute d`utilisation.

Performance data based on testing using 10W40 oil with a viscosity of 200 SUS at 54° C (130° F.). Performance data is typical. Actual data may vary slightly from one production motor to another.

Les donnees sur les performances sont basees sur des tests utilisant de l'huile 10W40 d'une viscosite de 200 SUS a 54°C (130°F). Ces donnees correspondent a des situations typiques. Les donnees reelles peuvent varier legerement d'un moteur de production a l'autre.

Intermittierende Werte maximal 10% von jeder Betriebsminute.

Capacidad de funcionamiento intermitente valida para 6 segundos por cada minuto.

Leistungsdaten sind gemessen mit SAE 10W40 bei einer Viskositaet von 43,1 Cst bei 54°C. Geringfuegige Abweichungen von den Katalogdaten sind moeglich.

Datos tecnicos obtenidos con aceite 10W40 de 200 SUS de viscosidad a 54°C (130°F). Los datos proporcionados son valores tipcos. Los valores exactos reales podrian tener una pequena variacion entre distintos motores.

TE 0390 **24.0** cu in / rev

392 cc / rev

PRESSURE (PSID)

	500	1000	1250	1750
.5	1326 **4**	2889 **3**	3682 **2**	5244 **2**
1	1380 **9**	2934 **7**	3724 **7**	5283 **6**
2	1443 **18**	3034 **17**	3840 **15**	5427 **13**
3	1442 **28**	3049 **26**	3861 **25**	5458 **22**
4	1454 **37**	3084 **36**	3905 **34**	5518 **32**
5	1447 **47**	3104 **45**	3935 **44**	5562 **40**
7	1393 **66**	3080 **64**	3923 **62**	5559 **60**
9	1297 **85**	3013 **83**	3868 **81**	5507 **79**
12	1088 **114**	2818 **112**	3686 **110**	5308 **106**
15	797 **143**	2539 **140**	3414 **138**	5002 **135**
20	264 **191**	2006 **188**	2880 **186**	4374 **182**

Flow (GPM)

TORQUE (LB IN) 5559
SPEED (RPM) 60

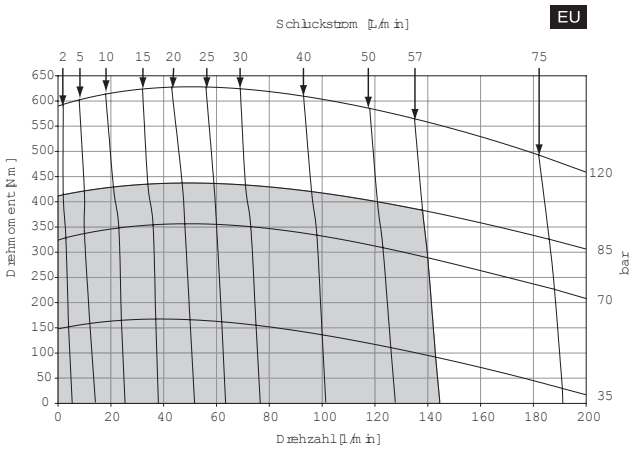

Cont. Int.

Intermittent operation rating applies to 10% of every minute.

Fonctionnement interm. 10% max. de chaque minute d`utilisation.

Performance data based on testing using 10W40 oil with a viscosity of 200 SUS at 54° C (130° F.). Performance data is typical. Actual data may vary slightly from one production motor to another.

Les donnees sur les performances sont basees sur des tests utilisant de l'huile 10W40 d'une viscosite de 200 SUS a 54°C (130°F). Ces donnees correspondent a des situations typiques. Les donnees reelles peuvent varier legerement d'un moteur de production a l'autre.

Intermittierende Werte maximal 10% von jeder Betriebsminute.

Capacidad de funcionamiento intermitente valida para 6 segundos por cada minuto.

Leistungsdaten sind gemessen mit SAE 10W40 bei einer Viskositaet von 43,1 Cst bei 54°C. Geringfuegige Abweichungen von den Katalogdaten sind moeglich.

Datos tecnicos obtenidos con aceite 10W40 de 200 SUS de viscosidad a 54°C (130°F). Los datos proporcionados son valores tipcos. Los valores exactos reales podrian tener una pequena variacion entre distintos motores.

Flange Mount / Standardgehaeuse
Monture à bride(s) / Montaje de brida

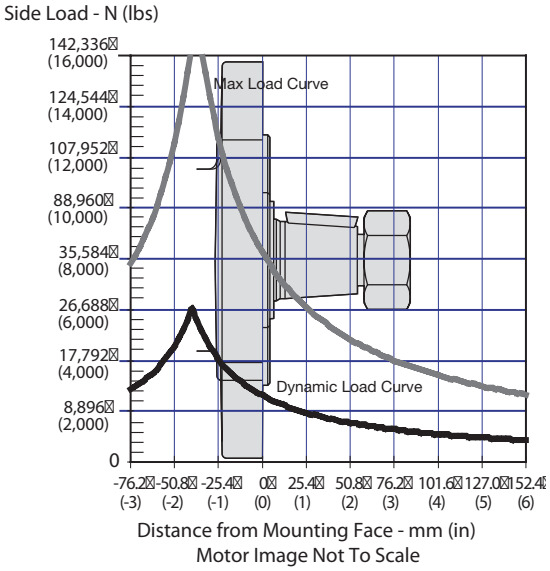

Wheel Mount / Radnabengehaeuse
Monture à roue / Montaje de rueda

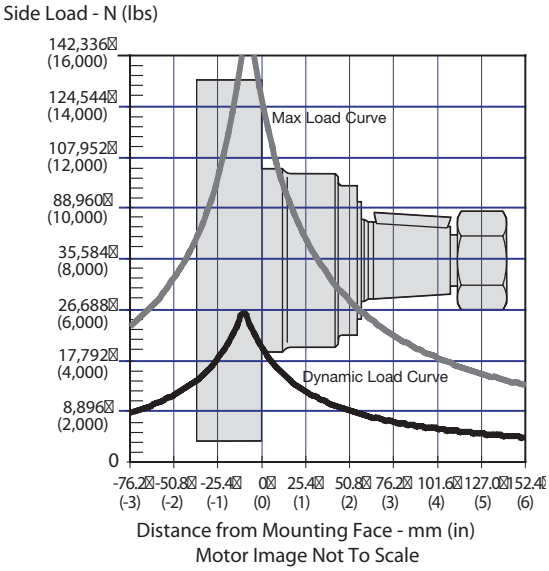

The dynamic side load curve is based on uni-directional steady state loads for L_{10} bearing life at 3 x 10^6 revolutions.
Die zulässige auslegbare radiale Wellenbelastungskurve ist unter ruhenden, einseitig statisch gerichteten Lastverhältnissen auf eine L_{10} Lebensdauer mit 3 x 10^6 Umdrehungen kalkuliert.
La courbe de charge latérale permise se base sur des charges unidirectionnelles en régime permanent pour le roulement L_{10} à 3 x 10^6 révolutions.
La curva de valores admisibles de carga lateral está basada en cargas constantes para cojinetes L_{10} a 3 x 10^6 revoluciones.

The maximum load curve is defined by bearing static load capacity. This curve should not be exceeded at any time including shock loads.
Die maximale radiale Wellenbelastungskurve ist definiert als maximale statische Last ohne Drehzahl. Sie gilt als Grenze und sollte keinesfalls überschritten werden.
La courbe de charge maximale est définie par la capacité de charge statique portante. Cette courbe ne devrait être dépassée en aucun moment y compris pour les charges par à-coups.
La curva de carga máxima queda definida por la capacidad de carga estática del cojinete. No se deben superar los valores de esta curva, ni siquiera con cargas provisorias de impacto.

Equation to Calculate the Expected Radial Bearing Life
Gelichung zur Ermittlung der Lagerlebensdauer

Equation to calculate the dynamic bearing life for a given load:
Bestimmung der erlaubten radialen Wellenbelastung mit vorgegebener Last

Use F_a, F_b and S in equation to determine hours of L_{10} bearing life.
Die Lebensdauer in Stunden ergibt sich durch einsetzen von F_a, F_b, und S in die nachstehende Formel.

$$L = \frac{3.0 \times 10^6}{60 \times S} \left\{\frac{F_a}{F_b}\right\}^{3.33}$$

Where / Mit:

S = Shaft Speed RPM / Abtriebswellendrehzahl in min^{-1}
L = Life In Hours / Lebensdauer in Stunden
F_a = Allowable side load defined by above curve at a distance from mounting flange. / Erlaubte radiale Wellenbelastung als Function der Laenge
F_b = Application side load. / Anwendungsseitige Wellenbelastung

Note: Calculations are based on L_{10} bearing life per ISO 281.
Auslegung basiert auf einer L_{10} Lenbendauer nach ISO 281

Code: AM
SAE A 2-Bolt, Manifold

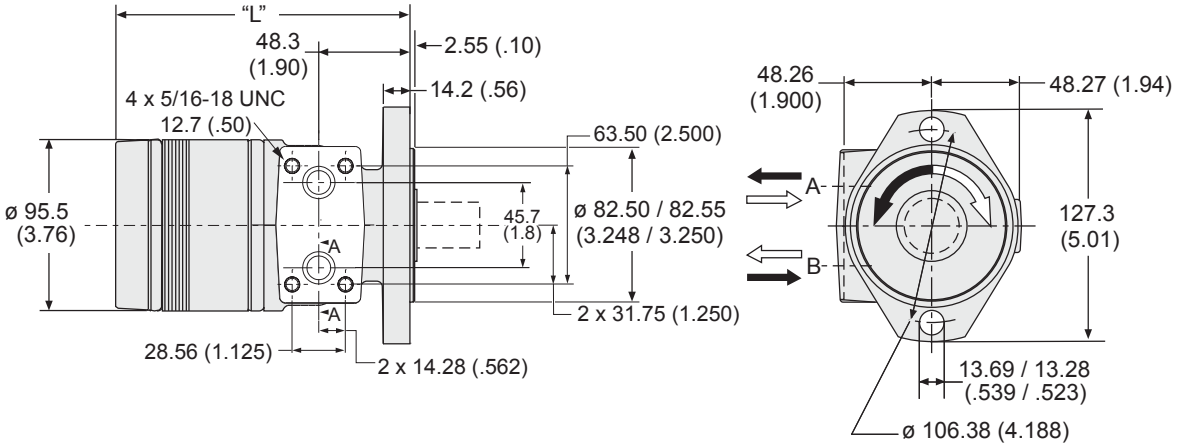

Code AM	disp.	0045	0050	0065	0080	0100	0130	0165	0195	0230	0260	0295	0330	0365	0390
Weight/Gewicht	**kg**	**6.03**	**6.12**	**6.26**	**6.35**	**6.49**	**6.76**	**7.03**	**7.35**	**7.58**	**7.80**	**8.07**	**8.35**	**8.66**	**8.80**
Poids/Peso	(lb)	(13.3)	(13.5)	(13.8)	(14.0)	(14.3)	(14.9)	(15.5)	(16.2)	(16.7)	(17.2)	(17.8)	(18.4)	(19.1)	(19.4)
Length	**"L" mm**	**136**	**138**	**141**	**144**	**147**	**154**	**160**	**166**	**173**	**179**	**185**	**192**	**200**	**205**
	"L" (in)	(5.36)	(5.42)	(5.54)	(5.67)	(5.79)	(6.04)	(6.29)	(6.54)	(6.79)	(7.04)	(7.29)	(7.54)	(7.88)	(8.04)

Code: AP
SAE A 2-Bolt, 1/2-14 NPTF Pipe

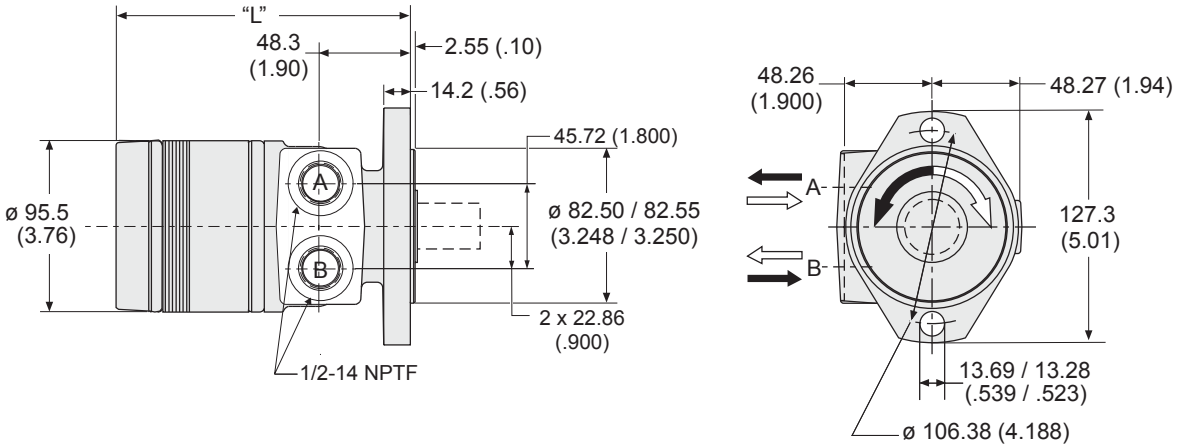

Code AP	disp.	0045	0050	0065	0080	0100	0130	0165	0195	0230	0260	0295	0330	0365	0390
Weight/Gewicht	**kg**	**6.03**	**6.12**	**6.26**	**6.35**	**6.49**	**6.76**	**7.03**	**7.35**	**7.58**	**7.80**	**8.07**	**8.35**	**8.66**	**8.80**
Poids/Peso	(lb)	(13.3)	(13.5)	(13.8)	(14.0)	(14.3)	(14.9)	(15.5)	(16.2)	(16.7)	(17.2)	(17.8)	(18.4)	(19.1)	(19.4)
Length	**"L" mm**	**136**	**138**	**141**	**144**	**147**	**154**	**160**	**166**	**173**	**179**	**185**	**192**	**200**	**205**
	"L" (in)	(5.36)	(5.42)	(5.54)	(5.67)	(5.79)	(6.04)	(6.29)	(6.54)	(6.79)	(7.04)	(7.29)	(7.54)	(7.88)	(8.04)

English equivalents for metric specifications are shown in ( ).

Code: AS
SAE A 2-Bolt, 7/8-14 SAE O-Ring

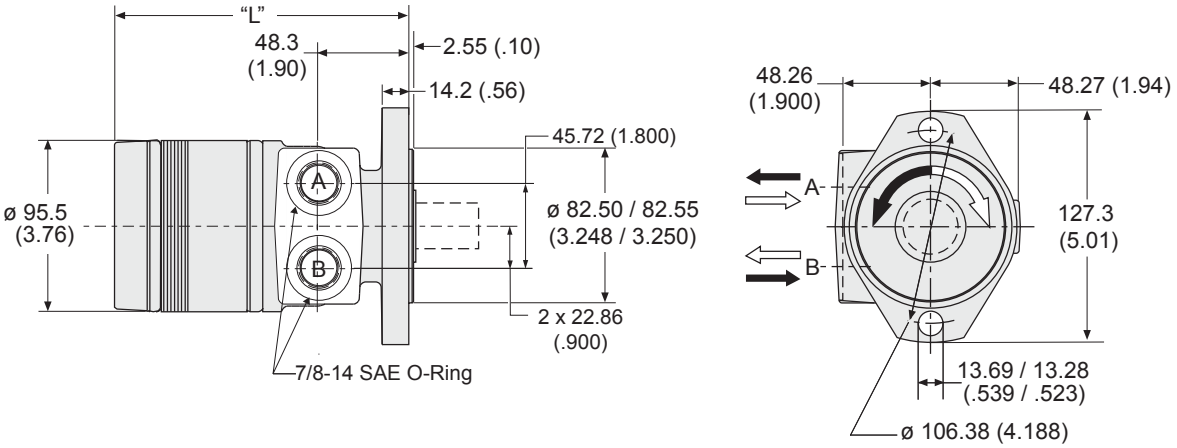

Code AS disp.	0045	0050	0065	0080	0100	0130	0165	0195	0230	0260	0295	0330	0365	0390
Weight/Gewicht kg	**6.03**	**6.12**	**6.26**	**6.35**	**6.49**	**6.76**	**7.03**	**7.35**	**7.58**	**7.80**	**8.07**	**8.35**	**8.66**	**8.80**
Poids/Peso (lb)	(13.3)	(13.5)	(13.8)	(14.0)	(14.3)	(14.9)	(15.5)	(16.2)	(16.7)	(17.2)	(17.8)	(18.4)	(19.1)	(19.4)
Length "L" mm	**136**	**138**	**141**	**144**	**147**	**154**	**160**	**166**	**173**	**179**	**185**	**192**	**200**	**205**
"L" (in)	(5.36)	(5.42)	(5.54)	(5.67)	(5.79)	(6.04)	(6.29)	(6.54)	(6.79)	(7.04)	(7.29)	(7.54)	(7.88)	(8.04)

Code: FP
Four Bolt, 1/2-14 NPTF Pipe

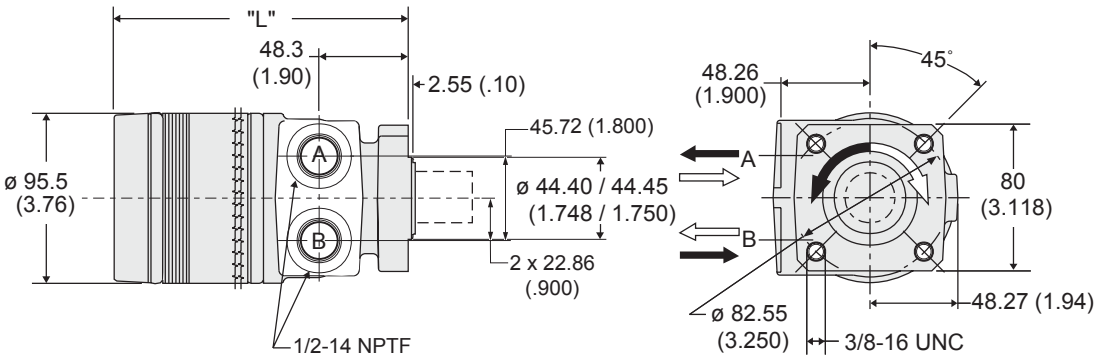

Code FP disp.	0045	0050	0065	0080	0100	0130	0165	0195	0230	0260	0295	0330	0365	0390
Weight/Gewicht kg	**5.62**	**5.67**	**5.80**	**5.94**	**6.08**	**6.31**	**6.62**	**7.03**	**7.17**	**7.39**	**7.62**	**7.94**	**8.26**	**8.39**
Poids/Peso (lb)	(12.4)	(12.5)	(12.8)	(13.1)	(13.4)	(13.9)	(14.6)	(15.5)	(15.8)	(16.3)	(16.8)	(17.5)	(18.2)	(18.5)
Length "L" mm	**136**	**138**	**141**	**144**	**147**	**154**	**160**	**166**	**173**	**179**	**185**	**192**	**200**	**205**
"L" (in)	(5.36)	(5.42)	(5.54)	(5.67)	(5.79)	(6.04)	(6.29)	(6.54)	(6.79)	(7.04)	(7.29)	(7.54)	(7.88)	(8.04)

English equivalents for metric specifications are shown in ( ).

Code: FS
Magneto, 7/8-14 SAE O-Ring

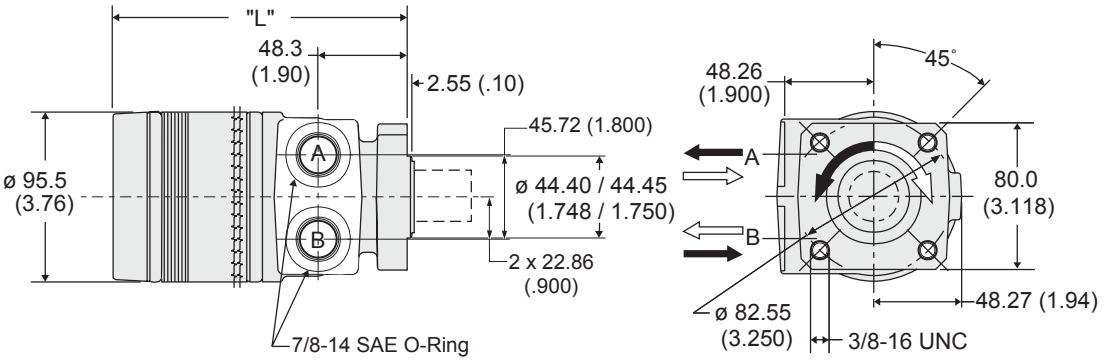

Code FS disp.	0045	0050	0065	0080	0100	0130	0165	0195	0230	0260	0295	0330	0365	0390
Weight/Gewicht kg	**5.62**	**5.67**	**5.80**	**5.94**	**6.08**	**6.31**	**6.62**	**7.03**	**7.17**	**7.39**	**7.62**	**7.94**	**8.26**	**8.39**
Poids/Peso (lb)	(12.4)	(12.5)	(12.8)	(13.1)	(13.4)	(13.9)	(14.6)	(15.5)	(15.8)	(16.3)	(16.8)	(17.5)	(18.2)	(18.5)
Length "L" mm	**136**	**138**	**141**	**144**	**147**	**154**	**160**	**166**	**173**	**179**	**185**	**192**	**200**	**205**
"L" (in)	(5.36)	(5.42)	(5.54)	(5.67)	(5.79)	(6.04)	(6.29)	(6.54)	(6.79)	(7.04)	(7.29)	(7.54)	(7.88)	(8.04)

Code: CS
SAE "A" 2-Bolt Long Pilot, 7/8-14 SAE O-Ring

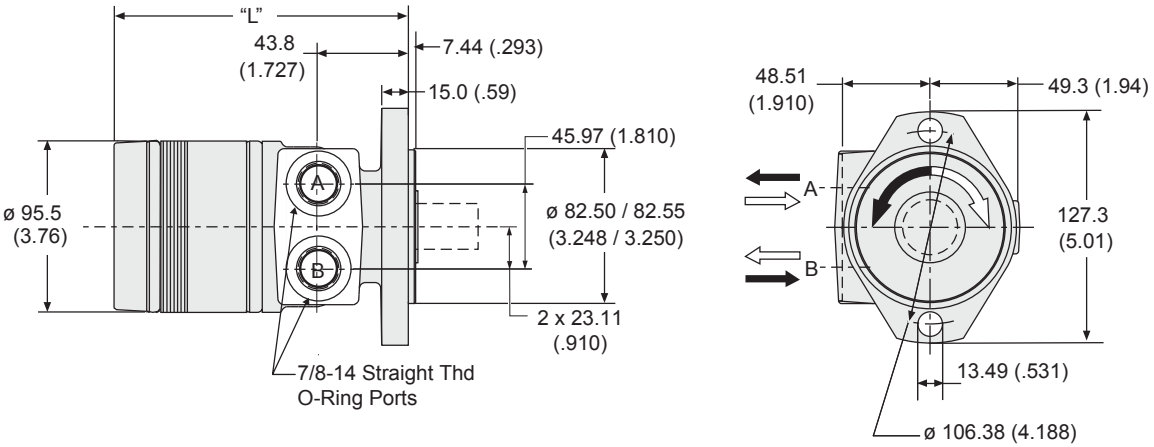

Code CS disp.	0036	0045	0050	0065	0080	0100	0130	0165	0195	0230	0260	0295	0330	0365	0390
Weight/Gewicht kg		**6.03**	**6.12**	**6.26**	**6.35**	**6.49**	**6.76**	**7.03**	**7.35**	**7.58**	**7.80**	**8.07**	**8.35**	**8.66**	**8.80**
Poids/Peso (lb)		(13.3)	(13.5)	(13.8)	(14.0)	(14.3)	(14.9)	(15.5)	(16.2)	(16.7)	(17.2)	(17.8)	(18.4)	(19.1)	(19.4)
Length "L" mm	**130**	**132**	**133**	**136**	**139**	**143**	**149**	**155**	**162**	**168**	**174**	**181**	**187**	**196**	**200**
"L" (in)	(5.13)	(5.18)	(5.23)	(5.36)	(5.48)	(5.61)	(5.86)	(6.11)	(6.36)	(6.61)	(6.86)	(7.11)	(7.36)	(7.70)	(7.86)

English equivalents for metric specifications are shown in ( ).

Code: MS
Magneto, 7/8-14 SAE O-Ring

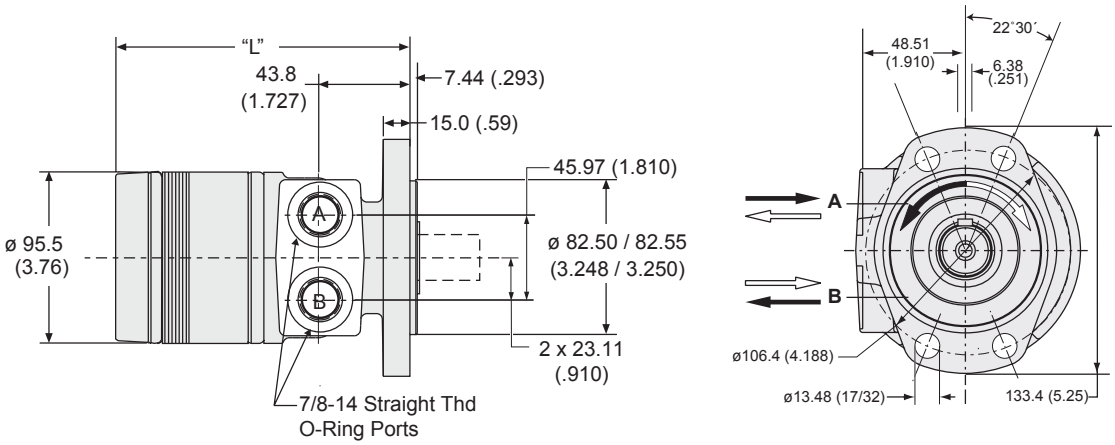

Code MS disp.	0045	0050	0065	0080	0100	0130	0165	0195	0230	0260	0295	0330	0365	0390
Weight/Gewicht kg	**6.30**	**6.40**	**6.53**	**6.62**	**6.76**	**7.03**	**7.30**	**7.62**	**7.85**	**8.12**	**8.35**	**8.62**	**8.94**	**9.07**
Poids/Peso (lb)	(13.9)	(14.1)	(14.4)	(14.6)	(14.9)	(15.5)	(16.1)	(16.8)	(17.3)	(17.9)	(18.4)	(19.0)	(19.7)	(20.0)
Length "L" mm	**136**	**138**	**141**	**144**	**147**	**154**	**160**	**166**	**173**	**179**	**185**	**192**	**200**	**204**
"L" (in)	(5.36)	(5.42)	(5.54)	(5.67)	(5.79)	(6.04)	(6.29)	(6.54)	(6.79)	(7.04)	(7.29)	(7.54)	(7.88)	(8.04)

Code: NS
Midmount, 7/8-14 SAE O-Ring

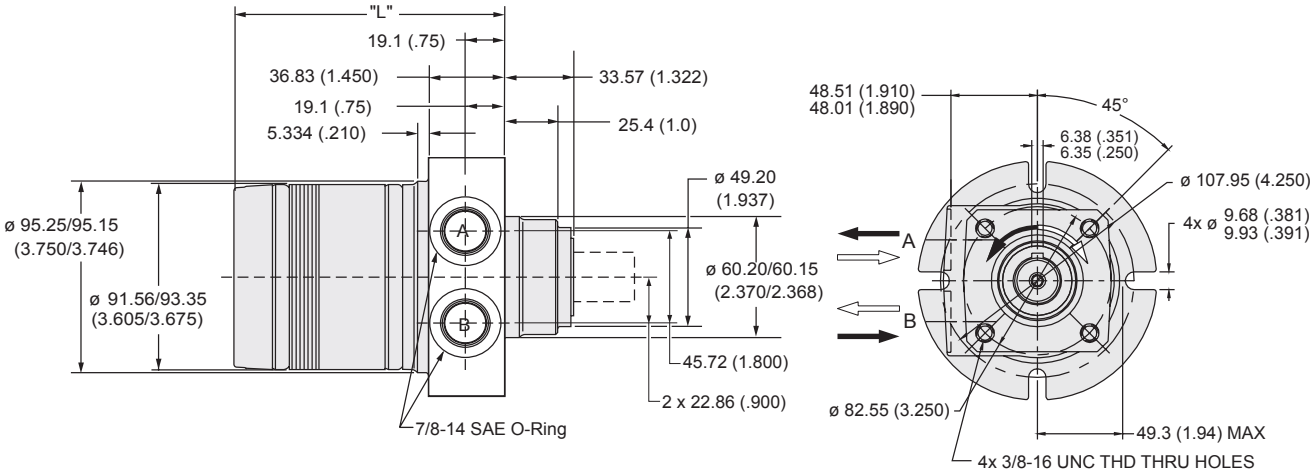

Code NS disp.	0045	0050	0065	0080	0100	0130	0165	0195	0230	0260	0295	0330	0365	0390
Weight/Gewicht kg	**6.30**	**6.40**	**6.53**	**6.62**	**6.76**	**7.03**	**7.30**	**7.62**	**7.85**	**8.12**	**8.35**	**8.62**	**8.94**	**9.07**
Poids/Peso (lb)	(13.9)	(14.1)	(14.4)	(14.6)	(14.9)	(15.5)	(16.1)	(16.8)	(17.3)	(17.9)	(18.4)	(19.0)	(19.7)	(20.0)
Length "L" mm	**136**	**138**	**141**	**144**	**147**	**154**	**160**	**166**	**173**	**179**	**185**	**192**	**200**	**204**
"L" (in)	(5.36)	(5.42)	(5.54)	(5.67)	(5.79)	(6.04)	(6.29)	(6.54)	(6.79)	(7.04)	(7.29)	(7.54)	(7.88)	(8.04)

English equivalents for metric specifications are shown in ( ).

004 TE.indd, js

Code: LS
Wheel Mount, 7/8-14 SAE O-Ring

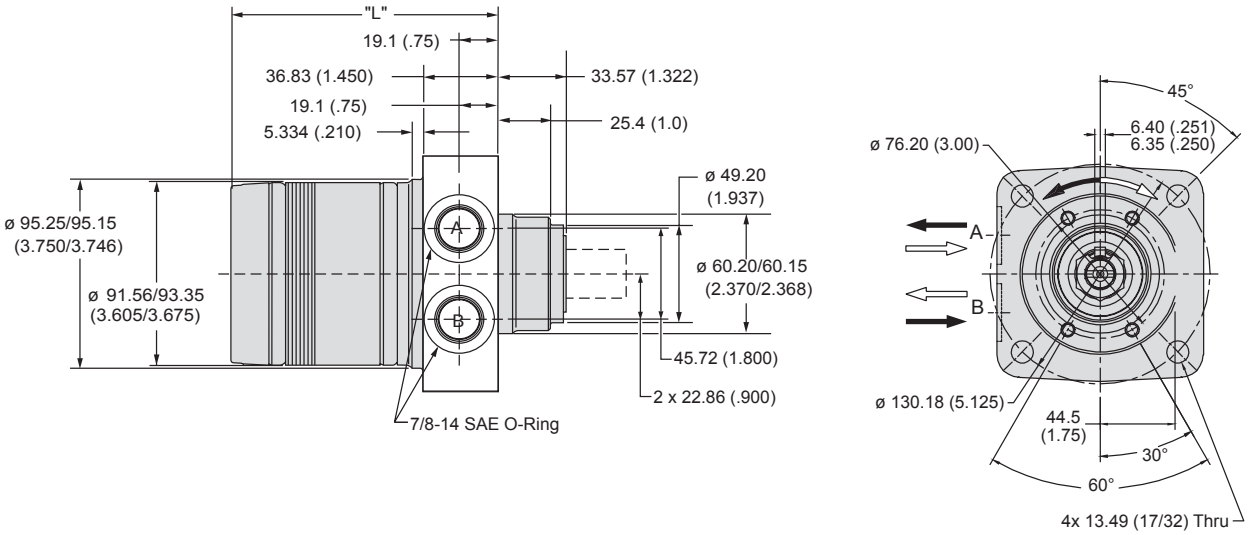

Code LS disp.	0045	0050	0065	0080	0100	0130	0165	0195	0230	0260	0295	0330	0365	0390
Weight/Gewicht kg	**6.80**	**6.90**	**7.00**	**7.10**	**7.20**	**7.60**	**7.80**	**8.10**	**8.30**	**8.60**	**8.80**	**9.10**	**9.40**	**9.60**
Poids/Peso (lb)	(15.0)	(15.2)	(15.4)	(15.6)	(15.8)	(16.7)	(17.2)	(17.9)	(18.3)	(19.0)	(19.4)	(20.0)	(20.7)	(21.2)
Length "L" mm	**107**	**108**	**112**	**115**	**118**	**124**	**131**	**137**	**143**	**150**	**156**	**162**	**171**	**175**
"L" (in)	(4.21)	(4.27)	(4.39)	(4.52)	(4.64)	(4.89)	(5.14)	(5.39)	(5.64)	(5.89)	(6.14)	(6.39)	(6.37)	(6.89)

Code: US
Wheel Mount, 7/8-14 SAE O-Ring

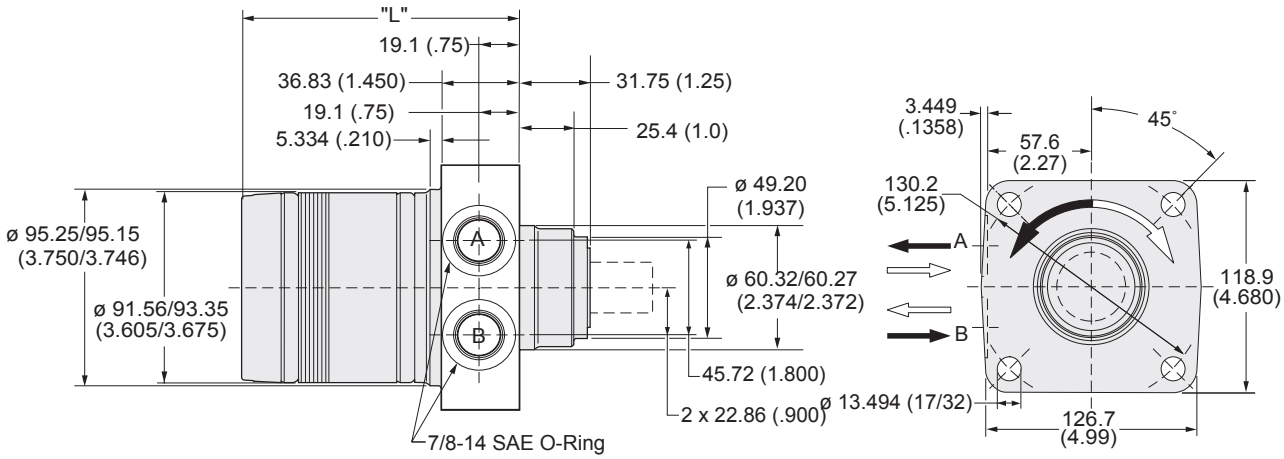

Code US disp.	0045	0050	0065	0080	0100	0130	0165	0195	0230	0260	0295	0330	0365	0390
Weight/Gewicht kg	**6.80**	**6.90**	**7.00**	**7.10**	**7.20**	**7.60**	**7.80**	**8.10**	**8.30**	**8.60**	**8.80**	**9.10**	**9.40**	**9.60**
Poids/Peso (lb)	(15.0)	(15.2)	(15.4)	(15.6)	(15.8)	(16.7)	(17.2)	(17.9)	(18.3)	(19.0)	(19.4)	(20.0)	(20.7)	(21.2)
Length "L" mm	**107**	**109**	**112**	**115**	**118**	**125**	**131**	**137**	**144**	**150**	**156**	**163**	**171**	**176**
"L" (in)	(4.21)	(4.27)	(4.39)	(4.52)	(4.64)	(4.89)	(5.14)	(5.39)	(5.64)	(5.89)	(6.14)	(6.39)	(6.73)	(6.89)

English equivalents for metric specifications are shown in ( ).

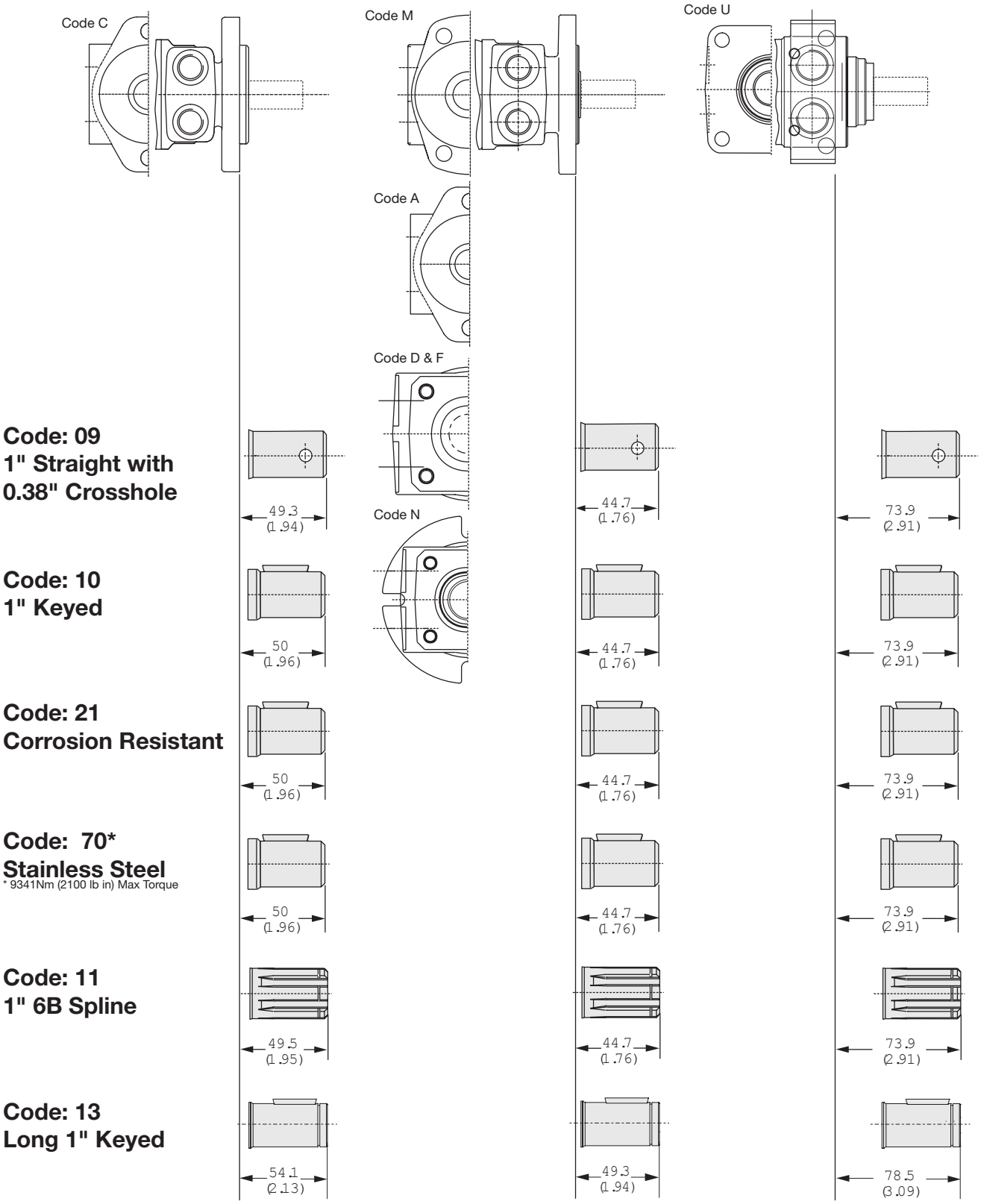
Code C
Code M
Code U
Code A
Code D & F
Code N
Code: 09
1" Straight with
0.38" Crosshole
49.3
(1.94)
44.7
(1.76)
73.9
(2.91)
Code: 10
1" Keyed
50
(1.96)
44.7
(1.76)
73.9
(2.91)
Code: 21
Corrosion Resistant
50
(1.96)
44.7
(1.76)
73.9
(2.91)
Code: 70*
Stainless Steel
* 9341Nm (2100 lb in) Max Torque
50
(1.96)
44.7
(1.76)
73.9
(2.91)
Code: 11
1" 6B Spline
49.5
(1.95)
44.7
(1.76)
73.9
(2.91)
Code: 13
Long 1" Keyed
54.1
(2.13)
49.3
(1.94)
78.5
(3.09)

Code L

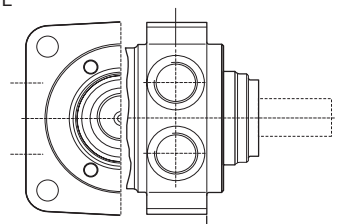

Code: 09
1" Straight with
0.38" Crosshole

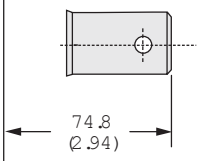

Code: 10
1" Keyed

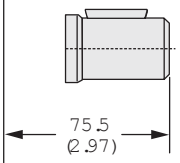

Code: 21
Corrosion Resistant

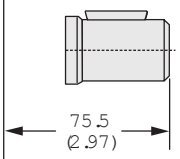

Code: 70*
1" Keyed, 1/4" Tap,
Stainless Steel
* 9341Nm (2100 lb in) Max Torque

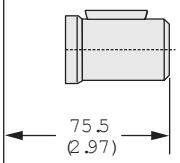

Code: 11
1" 6B Spline

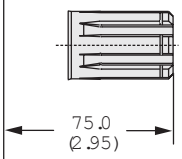

Code: 13
Long 1" Keyed

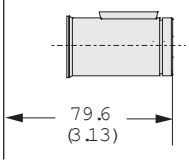

Code: 09
1" Straight with
0.38" Crosshole

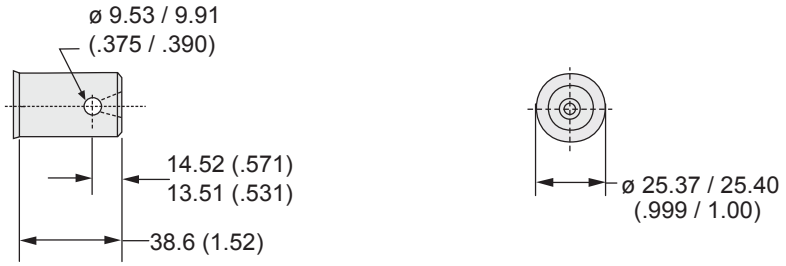

Code: 10
1" Keyed

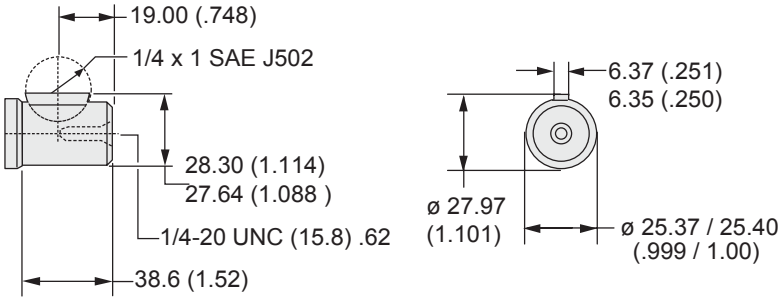

Code: 21
Corrosion Resistant

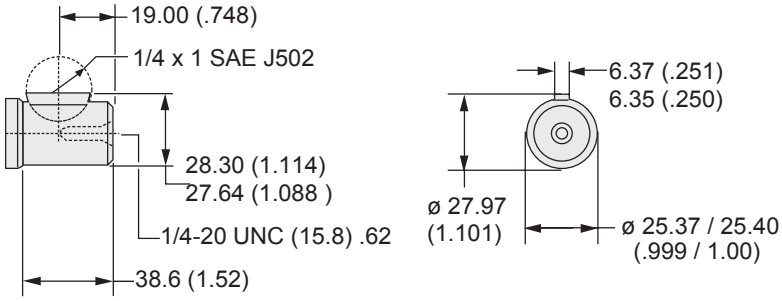

Code: 70*
1" Keyed, 1/4" Tap,
Stainless Steel

* 9341Nm (2100 lb in) Max Torque

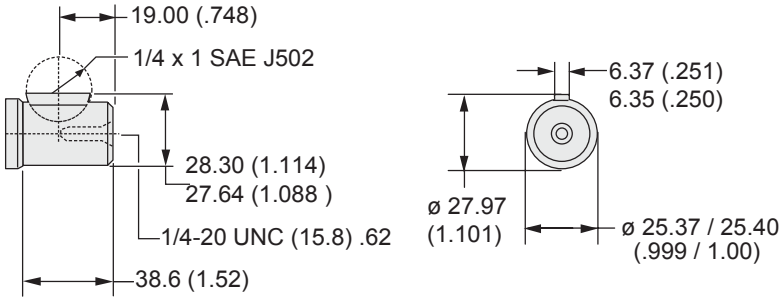

Code: 11
1" 6B Spline

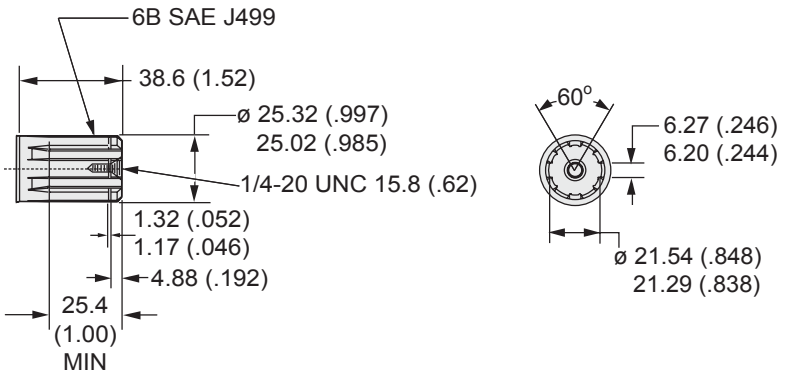

Code: 13
Long 1" Keyed

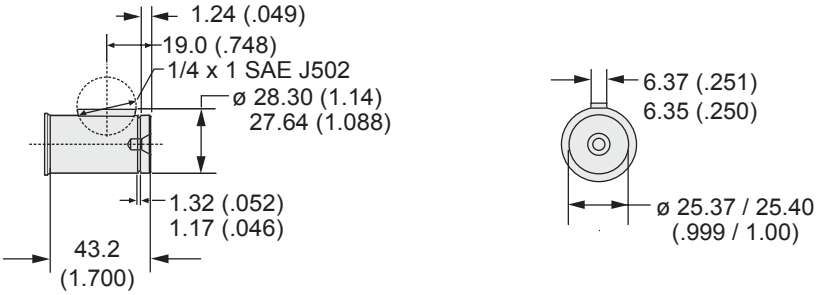

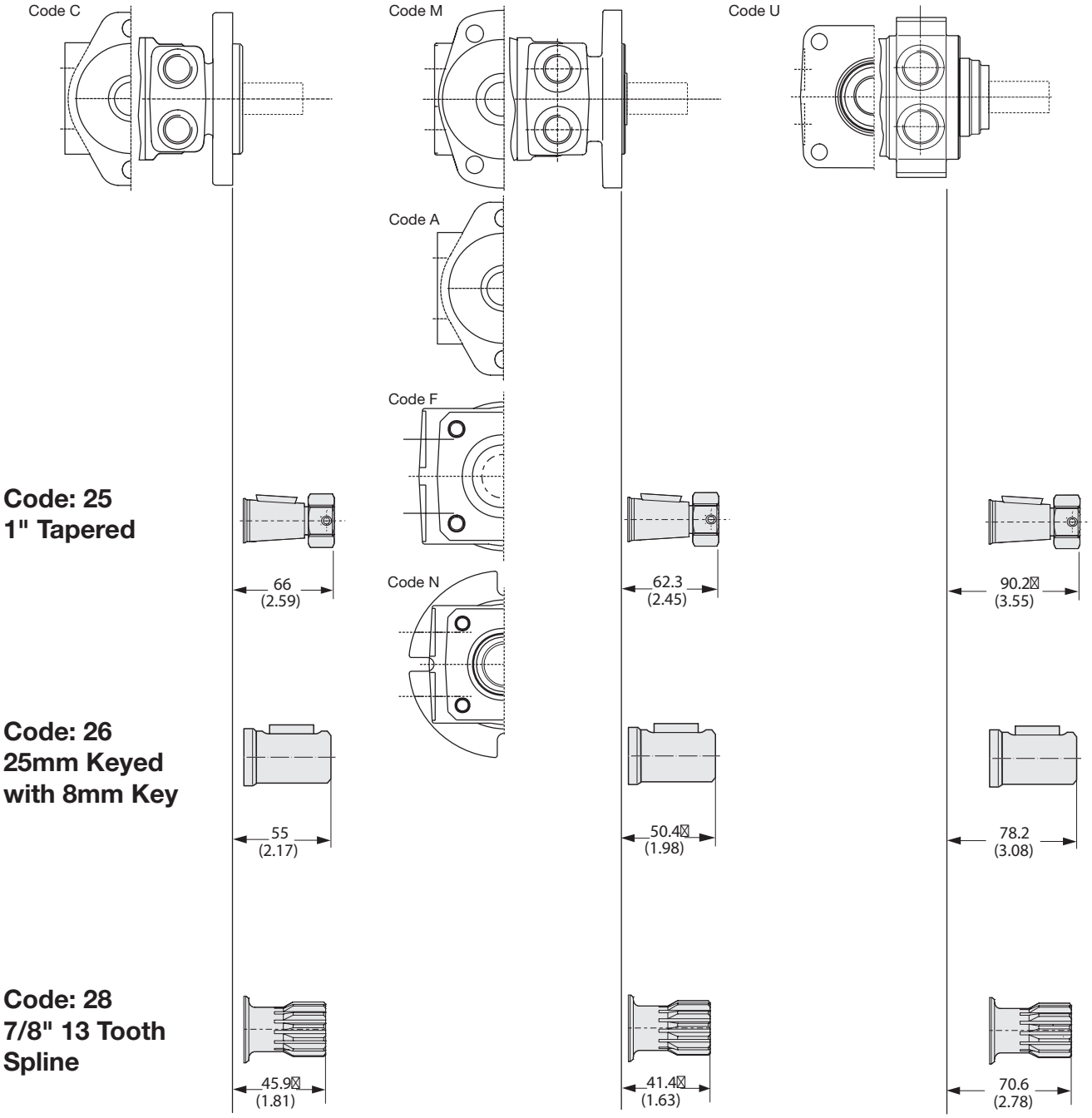

Code: 25
1" Tapered

Code: 26
25mm Keyed
with 8mm Key

Code: 28
7/8" 13 Tooth
Spline

Code L

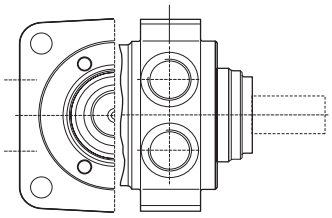

Code: 25
1" Tapered

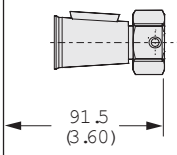

Code: 26
25mm Keyed
with 8mm Key

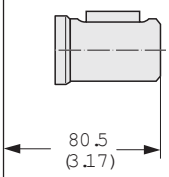

Code: 28
7/8" 13 Tooth
Spline

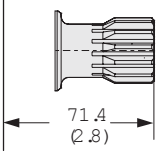

Code: 25
1" Tapered

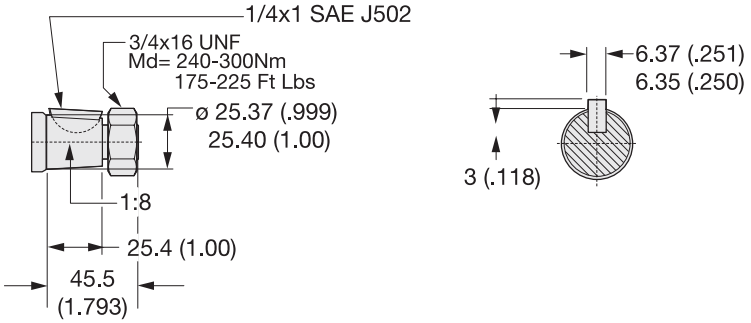

Code: 26
25mm Keyed
with 8mm Key

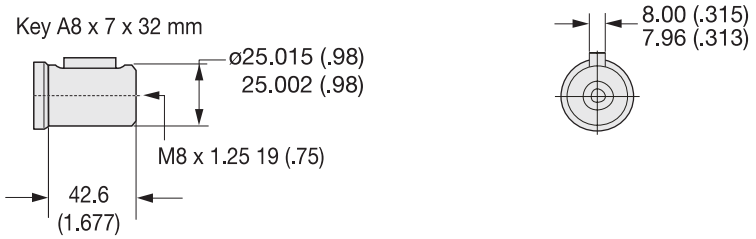

Code: 28
7/8" 13 Tooth
Spline

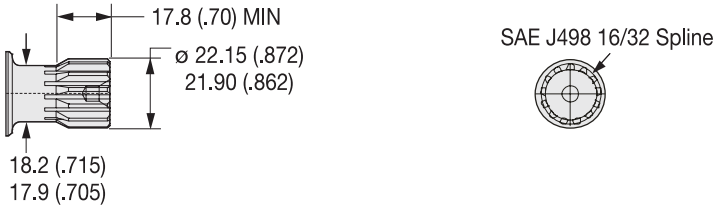

Code: 01
Long, 6B Spline,
Groove

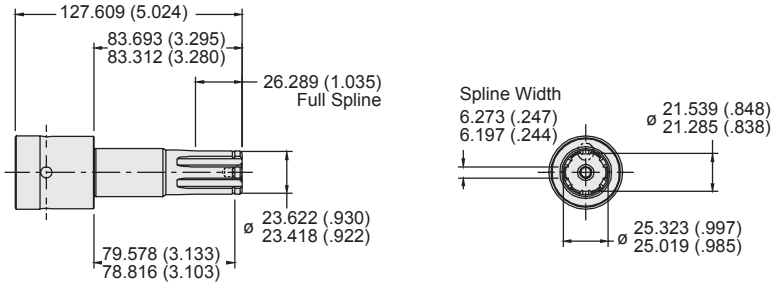

Code: 66
25mm Keyed with
8mm Key, Corrosion
Resistant

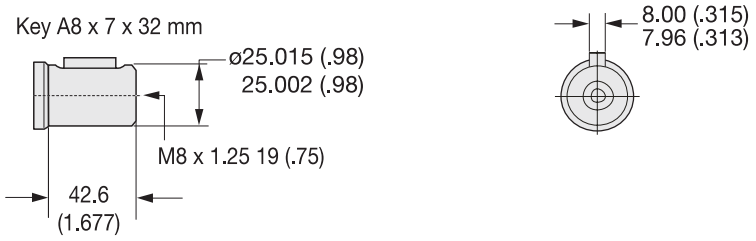

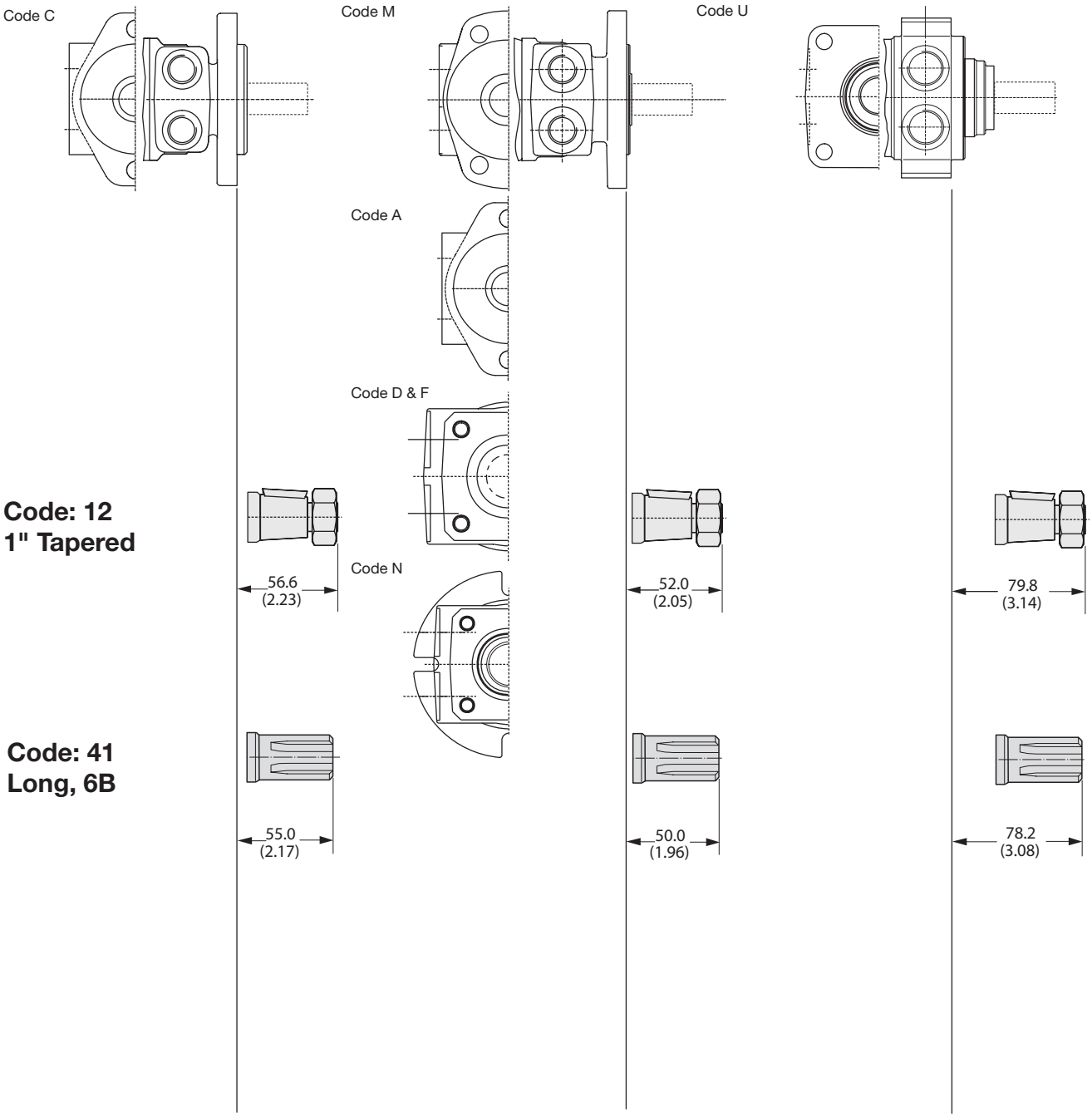
Code C
Code M
Code U
Code A
Code D & F
Code N
Code: 12
1" Tapered
56.6
(2.23)
52.0
(2.05)
79.8
(3.14)
Code: 41
Long, 6B
55.0
(2.17)
50.0
(1.96)
78.2
(3.08)

Code L

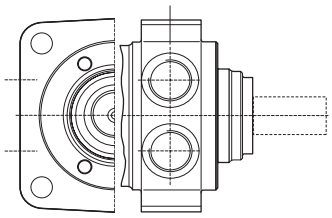

Code: 12
1" Tapered

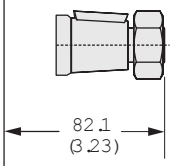

Code: 41
Long, 6B

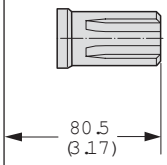

Code: 12
1" Tapered

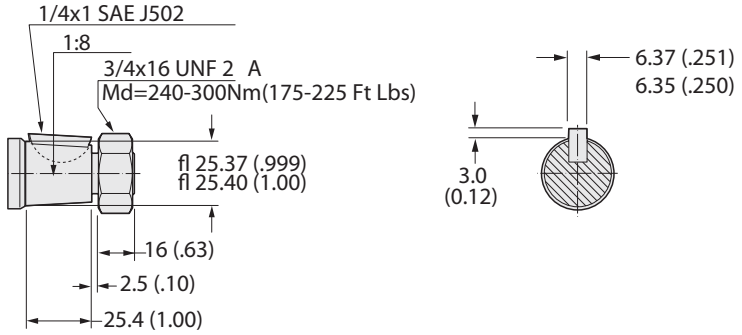

Code: 41
Long, 6B

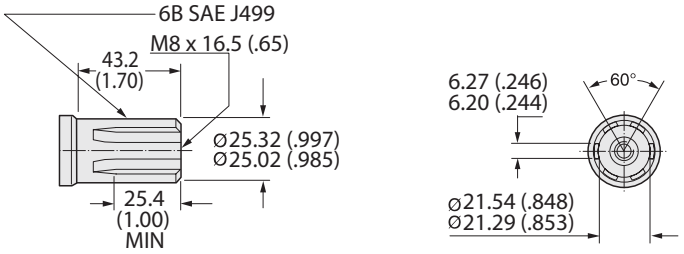

Code: FSAA* or FSAB EU US

An Economical Sensor for Speed Readout

This rugged, weather resistant design is ideal for industrial and mobile applications. Applications include salt/sand/fertilizer spreader drives, conveyer drives and injection molder compression drives. The sensor is a hall-effect type, which when externally powered outputs 30 square wave digital pulses per coupling shaft revolution. The connector is a user friendly universally available 4 pin polarized M12 connector allowing for simplified field service. The integrated design does not effect the side load capacity or performance of the torque motor.

Dieser robuste, wetterfeste Drehzahlaufnehmer arbeitet nach dem Halleffekt. Es werden 30 Rechteckimpulse pro Abtriebswellenumdrehung erzeugt. Durch Erfassung der positiven und negativen Wellenflanken sind 60 Impulse pro Umdrehung möglich. Der Sensor führt zu keiner Leistungsbeschränkung des Motors. Die volle Radiallastkapazität bleibt erhalten.

Un capteur economique pour mesure de la vitesse. Ce capteur robuste et resistant aux intemperies est a effet Hall. Alimente par une source externe, il fournit 30 ondes digitales carrees par tour. Par multiplication lelectronique on obient 60 pulsations par tour. Son montage ne modifie pas le couple ni la charge radiale du moteur qui le recoit.

Este es un diseño de construcción reforzada, apto para uso a la intemperie e ideal para uso industrial y en equipos móviles. Entre sus aplicaciones, se puede mencionar esparcidores de sal, arena o fertilizantes, unidades motoras de transportadores y unidades motoras de compresión para moldeo a inyección. El sensor es del tipo de medio efecto, que al ser excitado externamente, genera 30 pulsos digitales de onda cuadrada por cada revolución del eje del acoplamiento. Utiliza un simple conector M12 polarizado tetrapolar, que es de uso común y facilita el mantenimiento en el lugar de instalación. El diseño integrado no afecta la capacidad de carga lateral ni la potencia del motor de torque.

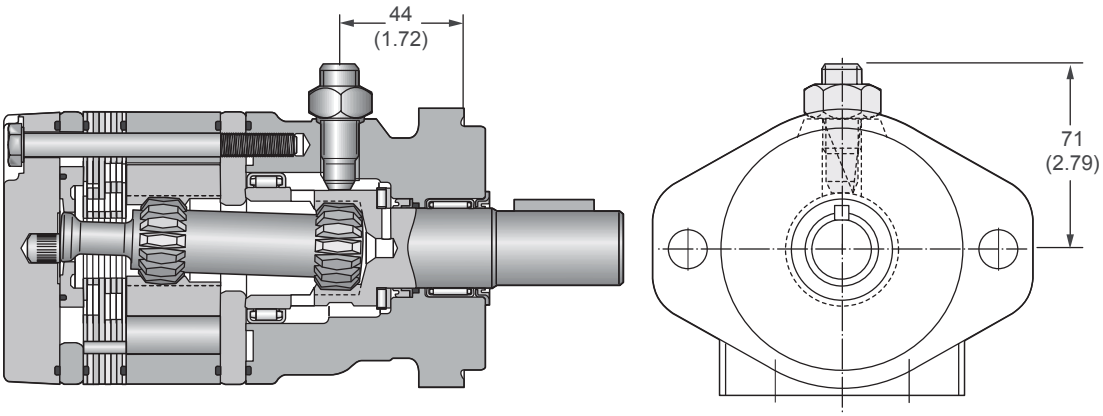

Maximum operating pressure 172 bar (2500 psi).

US equivalents for metric specifications are shown in ( ).

* Option code FSAA is with a single black coat of paint.
* Code FSAA: Motor schwarz grundiert
* Le code d'option montré correspond à une seule couche de peinture noire.
* El código de la opción mostrado es con una sola capa de pintura negra.

Operating voltage range Versorgungsspannung Gamme de tension de service Gama de voltaje de alimentacion	4.5...24 VDC
Operating temperature Arbeitstemperatur Temperature de service Tempuratura de servicio	-20° to 220° F -29°...104° C
Operating frequency range Arbeitsfrequenz Gamme de frequences de service Gama de frecuencia de servicio	0...10 KHZ
Max sink current Erforderlicher Laststrom Courant d'affaissement maxi Corriente maxima de alimentacion	0 ... 20 mA (max.)
Connection Anschluß Branchement Conexion	4 Pin Polarized (12mm)
Sensor output Sonsorausgang Sortie du détecteur Salida del sensor	30 Pulses per revolution which can be doubled electronically 30 impulsions par revolution pouvant etre doublees electroniquement 30 pulsos por revolucion, que pueden duplicarse electronicamente
Output is NPN Ausgang is NPN La sortie est NPN La salida es NPN	Open Collector

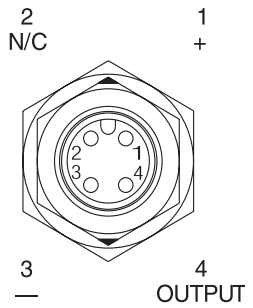

4 Pin Polarized

M12 Connector (Male)

Cable and "Pull Up" Resistor are not supplied by factory.

Zubehör wie z.B. Kabel gehören nicht zum Lieferumfang

Le câble et la résistance "Pull Up" ne sont pas fournis par l'usine.

El cable y la resistencia de arranque no se suministran originalmente de fábrica.

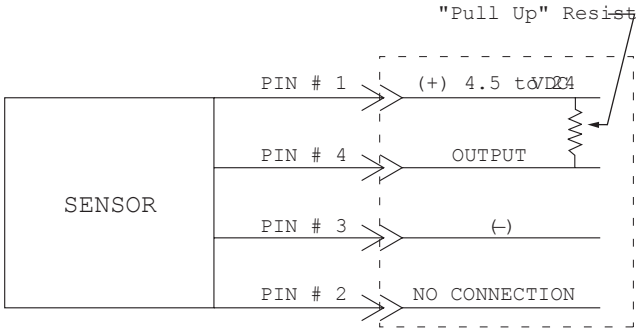

Pull-up Resistor Value Formula
Formel zur Ermittlung des Pull up-Widerstandes
Formule de la valeur de resistance Pull-up
Calculo de la resistance de carga

(0.25 Watt, 5% de tol.)
(0.25 Watt, Tol. 5%)
(0.25 Watt 5% Tol.)
(0.25 Watt, toll. 5%)

$$\frac{\text{Voltage / Spannung Courant d'affaissement/ Voltaje } 4.5...24\text{ VDC}}{\text{Sink Current / Laststrom Resistance / Corriente de alimentacion } 0...20\text{ mA}} = \text{Resistor / Widerstand / Resistance / Resistencia (k Ohm)}$$

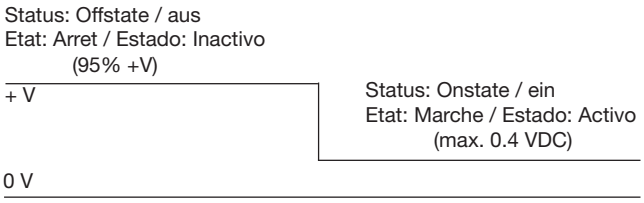

Code: AANC or AAJV* EU US

A Hot Oil Shuttle is used to continuously remove a portion of the fluid in a closed loop transmission or other closed loop system. At 125 PSI pressure differential between the motor return port and the shuttle outlet, 1.5 GPM* will exit the circuit to cool, filter and return to the reservoir. The constant loop replenishment helps to keep heat and contamination from building up in the circuit.

Spülventil für geschlossene Systeme zur Rückführung einer definierten Menge des Niederdrucköls in den Tank zur Abkühlung innerhalb desselben Kreislaufs.

Valve de rincage pour systèmes fermès pour le retour d`un volume dèterminè de fluide basse pression vers le rèservoir, un refroidisseur ou un filtre de rèfrigèration, dans le même circuit.

Un transferidor de aceite caliente actúa permanentemente para extraer una parte del fluido en una transmisión de circuito cerrado u otro sistema de circuito cerrado. Entre la entrada de retorno del motor y la salida del transferidor hay una diferencia de presión de 125 psi (libras/pulg.²), y a esta presión salen 1,5 galones por minuto del circuito para enfriarse, filtrarse y volver al depósito de fluido. El reacondicionamiento permanente de parte del fluido evita la contaminación del mismo y el incremento de temperatura en el circuito.

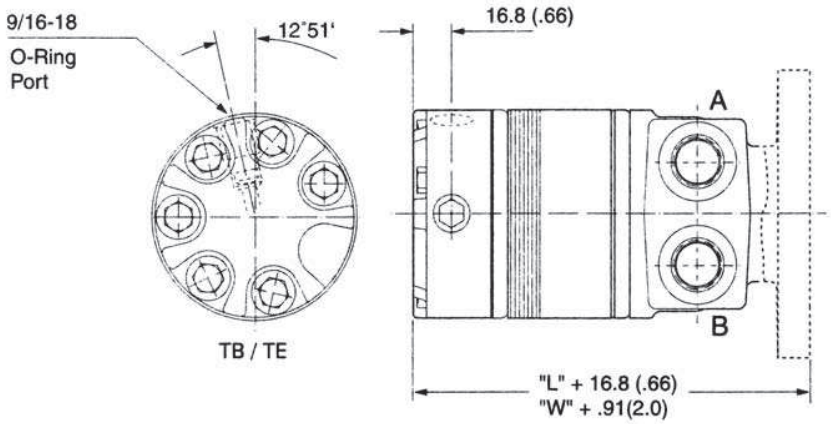

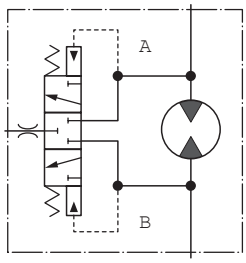

Q=5 l p=9 bar ϑ=39 cSt
(Q=1.32 gal) (p=131 psi) (ϑ=190 SUS)

* Option code AAJV is with a single black coat of paint
* Code AAJV: Motor schwarz grundiert
* Le code d'option moneté correspond à une seule couche de peinture noire
* El código de la opción mostrado es con una sola capa de pintura negra

English equivalents for metric specifications are shown in ( ).

Code: HAAA* or HAAB US

Specifications

- **Rated flow** — 20 gpm
- **Max. Operating Pressure** — adjustable up to 3500 psi, factory preset at 1750 psi.
- **Reseat Pressure** — 90% of set pressure
- **Operating Temperature Range:** -40°F to 250°F
- **Cartridge Material** — All parts steel. All operating parts hardened steel.
- **Body Material** — Steel

Einsatzdaten

- Max. Fluß 76l/min.
- Max. Druck 240 bar (Voreinstellung 120 bar)
- Hysterese 90% des Öffnungsdrucks
- Betriebstemperatur – 40°C bis 115°C
- Ventil in Stahlausführung
- Code für Ausführung schwarz grundiert

Spécifications

- **Débit nominal** – 75,7 litres/minute (20 gallons/minute)
- **Pressure de service maximale** – ajustable jusqu'à 246 kg/cm² (3 500 ppo²), préréglée à l'usine à 123 kg/cm² (1 750 ppo²).
- **Pression de rajustage** – 90% de la pression de consigne
- **Gamme des températures de service** – de – 40° C à 121° C (-40° F à 250° F).
- **Matériau de la cartouche** – Entièrement en acier. Toutes les pièces de service en acier durci.
- **Matériau du corps** – Acier

Especificaciones técnicas

- **Caudal:** 20 galones/minuto
- **Presión máxima de servicio:** regulable hasta 3.500 libras/pulg.². Regulada de fábrica a 1.750 libras/pulg.².
- **Presión de reasentamiento:** 90% de la presión calibrada.
- **Gama de temperatura de servicio:** - 40° F a 250° F
- **Material del cartucho:** todas las partes son de acero. Todas las partes activas son de acero templado.
- **Material del cuerpo:** acero

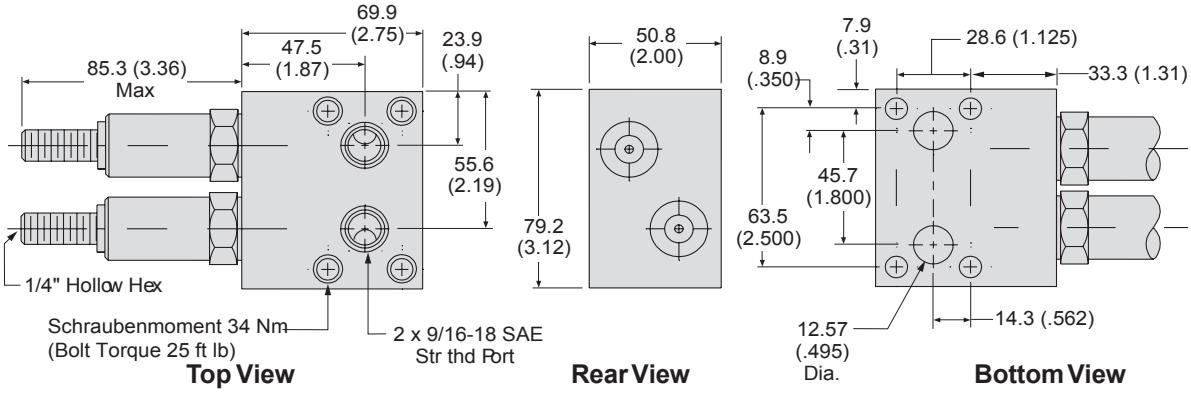

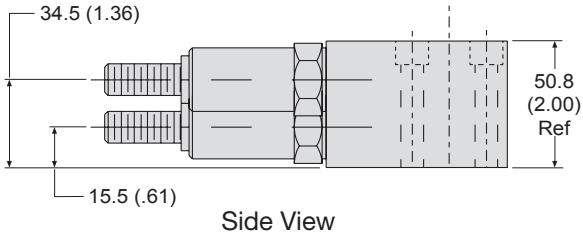

Side View

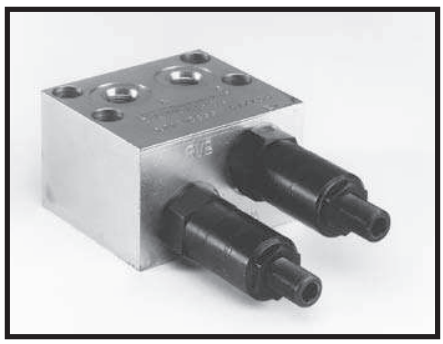

Performance Curve

Flow vs. Pressure

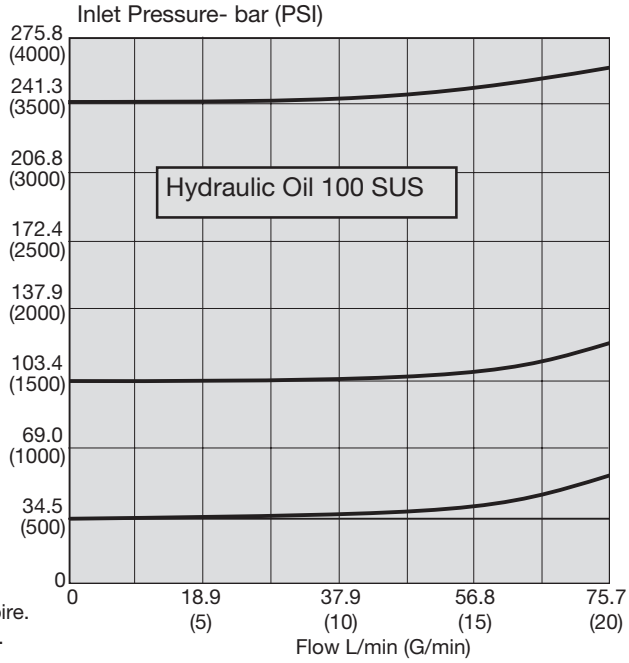

English equivalents for metric dimensions are shown in ( ).

* Option code shown is with a single black coat of paint.
* Motor schwarz grundiert
* Le code d'option montré correspond à une seule couche de peinture noire.
* El código de la opción mostrado es con una sola capa de pintura negra.

005 Small Frame Options.indd, js

Parker Hannifin Corporation
Hydraulic Pump/Motor Division
Greeneville, Tennessee, USA

Code: BBCK, BBCN or BBCM EU US

This integrated internal relief valve is used for fixed pressure settings.
Internes Schockventil mit festen Einstelldrucken
La soupape de sécurité interne s'utilise pour des valeurs de pression fixes.
La valvula interna de alivio se utiliza para cablibraciones fijas de presion.

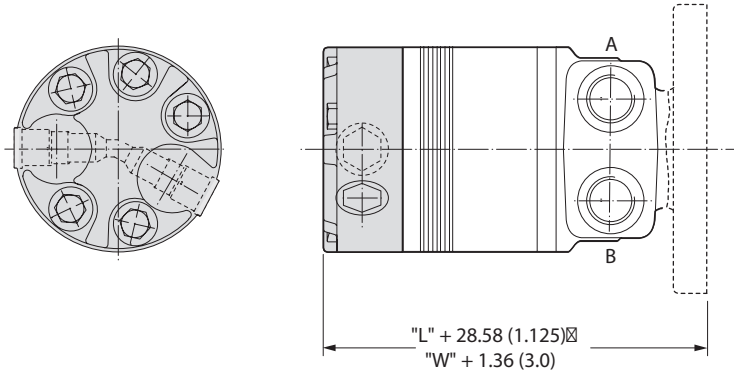

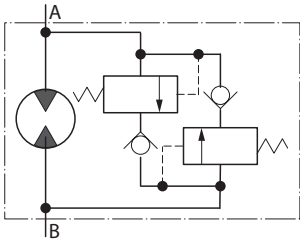

Code	Description	TB	TC	TE
BBCM	83 Bar / 1200 PSI Int Bidirectional Relief, No paint	x	x	x
BBCN	140 Bar / 2030 PSI Int Bidirectional Relief, No paint	x	x	x
BBCP	100 Bar / 1450 PSI Int Bidirectional Relief, No paint	x	x	x
BBCR	100 Bar / 1450 PSI Int Bidirectional Relief, Black paint	x	x	x
BBCT	108 Bar / 1560 PSI Int Bidirectional Relief, No paint	x	x	x
BBCV	64 Bar / 921 PSI Int Bidirectional Relief, Black paint	x	x	x
BBCK	120 Bar / 1740 PSI Int Bidirectional Relief, No paint	x	x	x
BBCE	83 Bar / 1200 PSI Int Bidirectional Relief, Flourocarbon (Viton) Seals, No Paint	x	x	x
BBDE	150 Bar / 2175 PSI Int Bidirectional Relief, Flourocarbon (Viton) Seals, No paint	x	x	x
BBDF	53 Bar / 761 PSI Int Bidirectional Relief, No paint	x	x	x
BBDM	53 Bar / 761 PSI Int Bidirectional Relief, No paint	x	x	x
BBDT	150 Bar / 2175 PSI Int Bidirectional Relief, No paint	x	x	x
BBDY	120 Bar / 1740 PSI Int Bidirectional Relief, No paint	x	x	x

Standard Length & Weights for TB Series on Pages 29-31 and TE Series on Pages 56-59.
Längen/Gewichte TB Serie siehe Seiten 29-31, TE Serie Seiten 56-59.
Longueurs et poids courants pour la série TB, voir les pages 29-31, et la série E, voir les pages 56-59.
Los valores estándar de longitud y peso de la Serie TB se puede ver en las Páginas 29-31, y de la Serie E en las Páginas 56-59.

English equivalents for metric specifications are shown in ( ).

Code: AAAA US
Double Paint — Base coat of red oxine primer and finish coat of black paint for increased corrosion resistance.

Code: AAAA
Schwarz lackiert

Code: AAAB EU US
No Paint

Code: AAAB
No Paint

Code: AAAC EU US
Double Paint — Base coat of red oxine primer and finish coat of black paint for increased corrosion resistance.

Code: AAAC
Zweischichtlackierung schwarz

Code AAAF* or AABP EU US
Castle Nut — All motors ordered with Tapered shafts are equipped with patch locking nuts. If desired, a castle nut may be specified.

Code AAAF* or AABP
Kronenmutter
Selbstsichernde Mutter wird ersetzt durch Kronenmutter

Code: AAAJ* or AAFG EU US
Vespel™ Commutator Seal — Under conditions of high temperature, it is suggested that a vespel commutator seal be used.

Code: AAAJ* or AAFG
Vespel™ / Kommutator Dichtung
Für Anwendungen im höheren Temperaturbereich oder nicht ausreichender Schmierung.

Code: AAAG* or AAAH EU US
Fluorocarbon — is available under various registered trademarks, including **VITON™** (a registered trademark of DuPont), **FLUOREL™** (a registered trademark of 3M) or **FPM™** (a registered trademark of DuPont).

Code: AAAG* or AAAH
Fluorocarbon Dichtungen
Für Anwendungen im höheren/niedrigeren Temperaturenbereich oder speziellen Flüssigkeiten wird der Einsatz von Fluorcarbon Dichtungen empfohlen.
Fluorocarbon ist bekannt unter verschiedenen eingetragenen Warenzeichen
VITON™ - DuPont, Fluorel™ - 3M, FPM™ - DuPont

Code: AABJ* or AABK
Free Running Rotorset — The “free running rotorset” is a specially dimensioned rotorset that allows for smooth operation at low flows and low pressure. Volumetric efficiency can be affected.

Code: AABJ* or AABK
Leichtläufer Rotorsatz
Anlaufdruck < 5 bar

* Option code shown is with a single black coat of paint.
* Code: Motor schwarz grundiert
* Le code d’option montré correspond à une seule couche de peinture noire.
* El código de la opción mostrado es con una sola capa de pintura negra.

Availability / Verfugbarkeit			Code Painted	Code Unpainted	
TC	**TB**	**TE**	**Lackiert**	**UnLackiert**	**Description / Beschreibung**
US	US	US	AAAA	AAAB	Standard seals
US	US	US	AAJV	AANC	Bidirectional shuttle 3:30
	US	US	AABT	-	No nut
		US	BBDF	BBDM	52 Bar (761 PSI) Internal Bidirectional Relief
	US	US	BBCV	-	64 Bar (921 PSI) Internal Bidirectional Relief
	US	US	-	BBCE	83 Bar (1200 PSI) Internal Bidirectional Relief, Flourocarbon (Viton) shaft seals
	US	US	BBCR	BBCP	100 Bar (1450 PSI) Internal Bidirectional Relief
US	US	US	-	BBCT	108 Bar (1560 PSI) Internal Bidirectional Relief
US	US	US	AAAC	-	Double Paint / Zweischichten – Lackierung
	US	US	AAAF	AABP	Castle Nut / Kronenmutter
US	US	US	AAAG	AAAH	Fluorocarbon Seals / Fluorocarbon Dichtungen
US	US	US	AAAJ	AAFG	Vespel™ Commutator Seal / Vespel™ Kommutator Dichtung
US	US	US	AABJ*	AABK*	Free Running Rotorset / Leichtläufer-Rotorsatz
		US	FSAA	FSAB	Speed Sensor / Drehzahl-Sensor
	US	US	-	BBCN	140 Bar (2030 PSI) Internal Bidirectional Relief / Internes Schockventil
	US	US	BBDY	BBCK	120 Bar (1740 PSI) Internal Bidirectional Relief / Internes Schockventil
	US	US	-	BBCM	83 Bar (1200 PSI) Internal Bidirectional Relief / Internes Schockventil
US	US	US	HAAA	HAAB	Adjustable external Relief Valve / Schockventil (einstellbar)
Consult factory for other positions and combinations. / Weitere Optionen nach Rücksprache verfügbar					

*Not applicable to 0365 or 0390 displacements.
*Nicht verfugbar fur 0365 und 0390

14 Displacements **14 Schluckvolumen** **14 Cylindrée** **14 Despazamientos**		(2.5 – 24.0 in³/rev) **41 . . . 390 cm³/rev**
	Cont	**Int**
Maximum Pressure **Eingangsdruck** **Pression entrée** **Presion Maxima**	(2030 psid) **. . .140 bar**	(2750 psid) **. . .190 bar**
Maximum Oil Flow **Schluckstrom** **Débit d'huile** **Caudal Maximo de Aceite**		(20 gpm) **. . . 75 lpm**
Maximum Speed **Drehzahl** **Vitisse de rotation Maxi** **Velocidad Maxima**		(1024 rpm) **1024 rpm**
	Cont	**Int**
Maximum Torque **Max Drehmoment** **Couple Maxi** **Torque Maximo**	(4139 lb in) **467 Nm**	(5728 lb in) **648 Nm**
Maximum Side Load at Key **Seitenlast** **Charges latèrales** **Carga Maxima Lateral**		(3150 lb) **. . . 14000 N**

The Ultimate in Performance from a Medium Frame Motor

Parker's TJ Series motor provides all that could be expected of a general purpose motor and more. Patented 60:40 spline geometry provides drivetrain strength for severe applications. Roller vanes and sealed orbit commutation assure high volumetric efficiency and smooth slow speed operation. Cooling fluid flow across splines and seals mean long, trouble-free life.

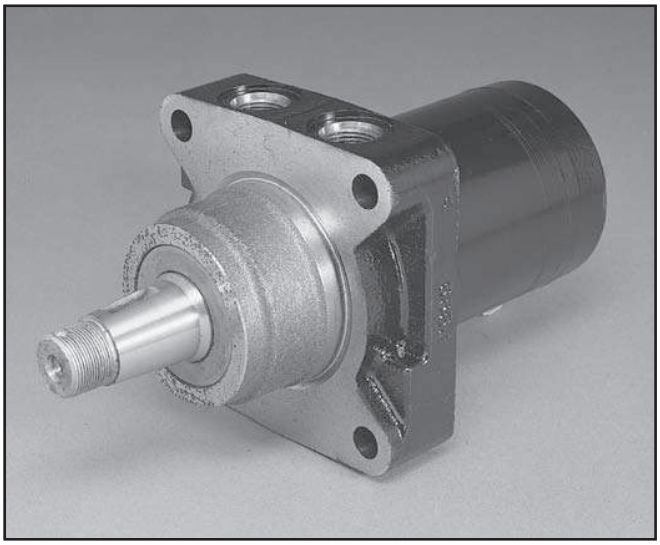

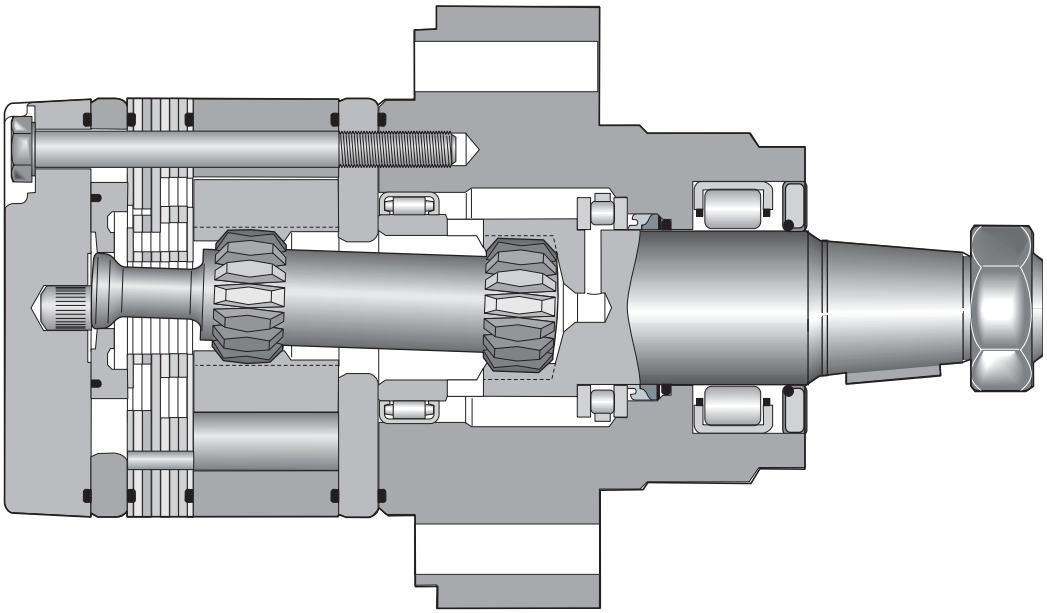

TJ	XXXX	U	S	08	0	XXXX
Series	Displacement Schluckvolumen Cylindrée Desplazamiento	Mounting Gehäuse Carter Montaje	Ports Anschluß Plan de raccordement Lumbreras	Shaft Welle Arbre Eje	Rotation Drehrichtung Direction de rotation Rotacion	Options Opciones

Code	cm^3/U / cm^3/rev cm^3/tr / cm^3/giro
0045	41 / 2.5
0050	49 / 3.0
0065	65 / 4.0
0080	82 / 5.0
0100	98 / 6.0
0130	130 / 8.0
0165	163 / 10.0
0195	195 / 11.9
0230	228 / 13.9
0260	260 / 15.9
0295	293 / 17.9
0330	328 / 20.0
0365	370 / 22.6
0390	392 / 24.0

Code	Mounting
U	Wheel Mount

Code	Porting
S	7/8-14 SAE

Code	Shaft
08	1 1/4" Tapered*

*See installation instructions.

Code	Rotation
0	Standard

Code	
AAAB	No Paint No lackiert
AAAA	Black Paint Schwarz lackiert

For other available options, see pages 119–120.

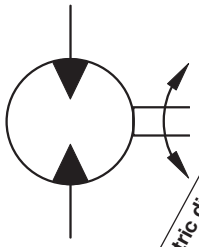

Motor Series TJ	Geometric displacement / Geom. Schluckvolumen / Cylindrée / Despazamientos	Max. speed @ Max. intermittent flow / Max. Drehzahl Intermittierender Betrieb: / Vitisse de rotation maxi / Velocidad maxima a caudal intermitente maximo	Max. oil flow / Max. Schluckstrom / Débit d'huile maxi / Caudal Maximo de Aceite		Max differential pressure / Max. Druckgefälle / Chute de pression maxi / Presion diferencial maxima		Max. supply pressure / Max. Eingangsdruck / Pression maxi entrée / Presion maxima de alimentacion		Max. torque / Max. Drehmoment / Couple maxi / Torque Maximo		Max. performance / Max. Leistungabgabe / Puissance de sortie maxi / Maximo rendimieto	Min. starting torque / Min. Anlaufmoment / Couple min. fourni au dé manrage / Torque minimo de arranque	
	cm³/rev in³/rev	rev/min	***cont / int**** **l/min** g/min		***cont / int**** **bar** psid		***max*** **bar** psig	***cont / int**** **Nm** lb-in		***max*** **KW** HP	***cont / int**** **Nm** lb-in	
TJ 0045	**41** 2.5	1024	**34** 9	**42** 11	**140** 2000	**190** 2750	**200** 2900	**71** 624	**99** 876	**10.4** 13.9	**46** 411	**64** 565
TJ 0050	**49** 3.0	1020	**34** 9	**50** 13	**140** 2000	**190** 2750	**200** 2900	**90** 796	**127** 1120	**12.8** 17.2	**72** 637	**98** 871
TJ 0065	**65** 4.0	877	**45** 12	**57** 15	**140** 2000	**190** 2750	**200** 2900	**125** 1106	**176** 1558	**14.7** 19.8	**100** 885	**137** 1211
TJ 0080	**82** 5.0	695	**45** 12	**57** 15	**140** 2000	**190** 2750	**200** 2900	**160** 1416	**220** 1947	**17.3** 23.2	**128** 1133	**171** 1515
TJ 0100	**98** 6.0	582	**45** 12	**57** 15	**140** 2000	**190** 2750	**200** 2900	**190** 1682	**264** 2337	**17.4** 23.4	**152** 1345	**205** 1819
TJ 0130	**130** 8.0	438	**45** 12	**57** 15	**140** 2000	**190** 2750	**200** 2900	**255** 2257	**352** 3116	**17.3** 23.2	**204** 1806	**274** 2423
TJ 0165	**163** 10.0	348	**45** 12	**57** 15	**140** 2000	**190** 2750	**200** 2900	**310** 2744	**436** 3846	**17.0** 22.8	**248** 2195	**338** 2992
TJ 0195	**195** 11.9	292	**45** 12	**57** 15	**140** 2030	**190** 2750	**200** 2900	**390** 3452	**528** 4673	**17.4** 23.4	**312** 2762	**411** 3637
TJ 0230	**228** 13.9	328	**57** 15	**75** 20	**120** 1750	**165** 2400	**200** 2900	**380** 3363	**514** 4554	**17.7** 23.8	**304** 2691	**411** 3637
TJ 0260	**260** 15.9	287	**57** 15	**75** 20	**110** 1650	**155** 2250	**200** 2900	**400** 3540	**550** 4870	**16.7** 22.4	**320** 2832	**449** 3977
TJ 0295	**293** 17.9	256	**57** 15	**75** 20	**100** 1550	**145** 2100	**200** 2900	**428** 3784	**582** 5180	**15.7** 21.0	**328** 2903	**445** 3939
TJ 0330	**328** 20.0	228	**57** 15	**75** 20	**100** 1550	**135** 1960	**200** 2900	**443** 3926	**600** 5312	**14.8** 19.8	**344** 3045	**453** 4014
TJ 0365	**370** 22.6	203	**57** 15	**75** 20	**95** 1325	**125** 1825	**200** 2900	**467** 4133	**648** 5728	**13.6** 18.2	**373** 3301	**477** 4223
TJ 0390	**392** 24.0	191	**57** 15	**75** 20	**85** 1250	**120** 1740	**200** 2900	**445** 3935	**628** 5562	**12.5** 16.8	**348** 3080	**462** 4090

Performance data based on testing using 10W40 oil with a viscosity of 43,1 cSt. (200 SUS) at 54° C (130° F.). Performance data is typical. Actual data may vary slightly from one production motor to another.

Les donnees sur les performances sont basees sur des tests utilisant de l'huile 10W40 d'une viscosite de 200 SUS a 54°C (130°F). Ces donnees correspondent a des situations typiques. Les donnees reelles peuvent varier legerement d'un moteur de production a l'autre.

Leistungsdaten sind gemessen mit SAE 10W40 bei einer Viskositaet von 43,1 Cst bei 54°C. Geringfuegige Abweichungen von den Katalogdaten sind moeglich.

Datos tecnicos obtenidos con aceite 10W40 de 200 SUS de viscosidad a 54°C (130°F). Los datos proporcionados son valores tipcos. Los valores exactos reales podrian tener una pequena variacion entre distintos motores.

* Intermittent operation rating applies to 10% of every minute.
Intermittierende Werte maximal 10% von jeder Betriebsminute.
Fonctionnement interm. 10% max. de chaque minute d`utilisation.
Capacidad de funcionamiento intermitente valida para 10% por cada minuto.

006 TJ.indd, js

Parker Hannifin Corporation
Hydraulic Pump/Motor Division
Greeneville, Tennessee, USA

TJ 0045 — 2.5 cu in / rev

PRESSURE (PSID)

Flow (GPM)	500	1000	1500	2000	2750
.5	121 **41**	272 **35**	425 **28**	579 **22**	809 **10**
1	126 **86**	282 **79**	440 **72**	599 **65**	832 **50**
2	128 **176**	288 **168**	452 **161**	619 **152**	860 **136**
3	126 **266**	287 **257**	453 **249**	620 **239**	874 **221**
4	123 **356**	285 **346**	454 **337**	624 **326**	876 **306**
5	119 **446**	281 **435**	451 **425**	624 **413**	874 **392**
7	105 **625**	270 **613**	440 **601**	615 **587**	862 **562**
9	94 **805**	259 **791**	430 **777**	605 **761**	865 **733**
11	79 **984**	245 **968**	415 **951**	590 **930**	848 **897**

TORQUE (LB IN) 862
SPEED (RPM) 562

41 cc / rev

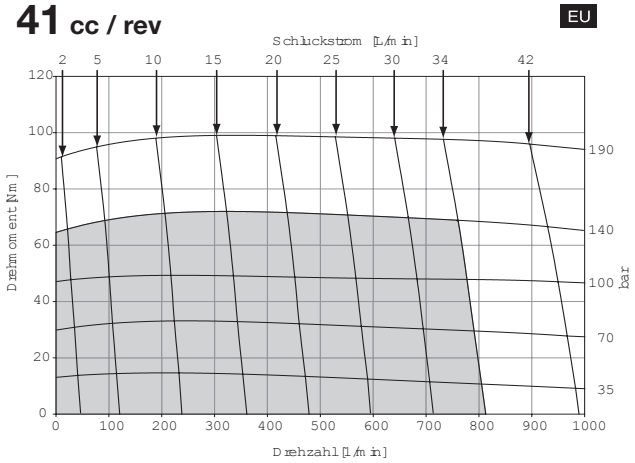

TJ 0050 — 3.0 cu in / rev

PRESSURE (PSID)

Flow (GPM)	500	1000	1500	2000	2750
.5	146 **32**	327 **23**	516 **13**	705 **6**	
1	159 **69**	345 **60**	537 **50**	727 **41**	1005 **18**
2	170 **146**	364 **136**	563 **124**	764 **113**	1051 **85**
3	167 **225**	363 **214**	565 **203**	768 **191**	1079 **161**
4	169 **294**	367 **282**	574 **271**	784 **260**	1089 **232**
5	165 **363**	365 **349**	574 **339**	785 **327**	1099 **294**
7	156 **501**	357 **485**	568 **474**	782 **460**	1094 **429**
9	141 **640**	342 **621**	555 **609**	771 **594**	1084 **561**
13	86 **903**	299 **879**	506 **868**	724 **852**	1038 **809**

TORQUE (LB IN) 1094
SPEED (RPM) 429

49 cc / rev

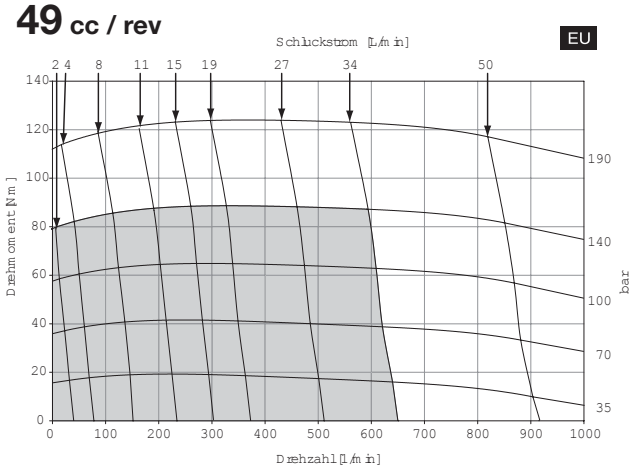

Cont. Int.

Intermittent operation rating applies to 10% of every minute.

Fonctionnement interm. 10% max. de chaque minute d`utilisation.

Performance data based on testing using 10W40 oil with a viscosity of 200 SUS at 54° C (130° F.). Performance data is typical. Actual data may vary slightly from one production motor to another.

Les donnees sur les performances sont basees sur des tests utilisant de l'huile 10W40 d'une viscosite de 200 SUS a 54°C (130°F). Ces donnees correspondent a des situations typiques. Les donnees reelles peuvent varier legerement d'un moteur de production a l'autre.

Intermittierende Werte maximal 10% von jeder Betriebsminute.

Capacidad de funcionamiento intermitente valida para 6 segundos por cada minuto.

Leistungsdaten sind gemessen mit SAE 10W40 bei einer Viskositaet von 43,1 Cst bei 54°C. Geringfuegige Abweichungen von den Katalogdaten sind moeglich.

Datos tecnicos obtenidos con aceite 10W40 de 200 SUS de viscosidad a 54°C (130°F). Los datos proporcionados son valores tipcos. Los valores exactos reales podrian tener una pequena variacion entre distintos motores.

TJ 0065

4.0 cu in / rev — PRESSURE (PSID)

Flow (GPM)	500	1000	1500	2000	2750
.5	220 **24**	481 **17**	743 **11**	1004 **3**	
1	232 **52**	498 **45**	763 **38**	1025 **31**	1418 **20**
2	239 **109**	512 **102**	789 **94**	1066 **85**	1457 **67**
3	238 **167**	512 **159**	790 **151**	1068 **141**	1489 **122**
4	237 **224**	514 **215**	795 **207**	1078 **197**	1496 **180**
5	233 **279**	511 **271**	794 **262**	1080 **252**	1500 **235**
7	216 **386**	497 **376**	783 **366**	1072 **356**	1496 **337**
9	195 **494**	477 **483**	764 **472**	1054 **460**	1492 **440**
12	152 **654**	435 **641**	724 **629**	1017 **617**	1450 **596**
15	102 **802**	388 **789**	680 **775**	969 **763**	1394 **740**

TORQUE (LB IN) 1496
SPEED (RPM) 337

65 cc / rev

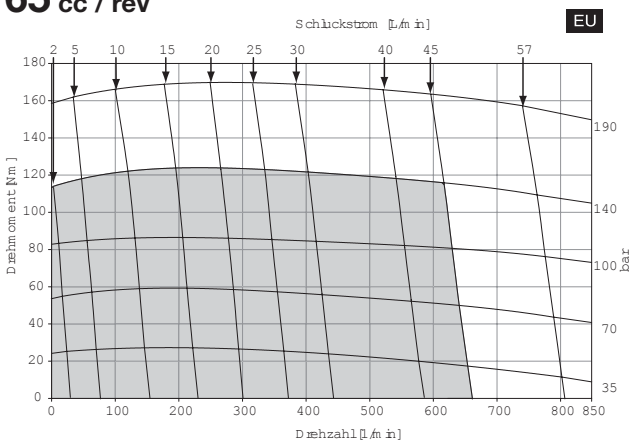

TJ 0080

5.0 cu in / rev — PRESSURE (PSID)

Flow (GPM)	500	1000	1500	2000	2750
.5	261 **17**	575 **8**			
1	276 **39**	596 **30**	918 **23**	1245 **13**	
2	290 **85**	631 **76**	974 **68**	1310 **56**	1774 **37**
3	291 **131**	633 **122**	978 **113**	1319 **101**	1819 **79**
4	293 **177**	642 **167**	995 **158**	1347 **146**	1846 **122**
5	290 **223**	641 **213**	999 **203**	1359 **191**	1869 **166**
7	273 **316**	628 **304**	989 **293**	1353 **280**	1887 **255**
9	249 **408**	603 **396**	966 **384**	1334 **370**	1869 **340**
12	197 **546**	551 **533**	916 **519**	1287 **504**	1815 **472**
15	136 **686**	494 **670**	857 **655**	1226 **638**	1756 **605**

TORQUE (LB IN) 1887
SPEED (RPM) 255

82 cc / rev

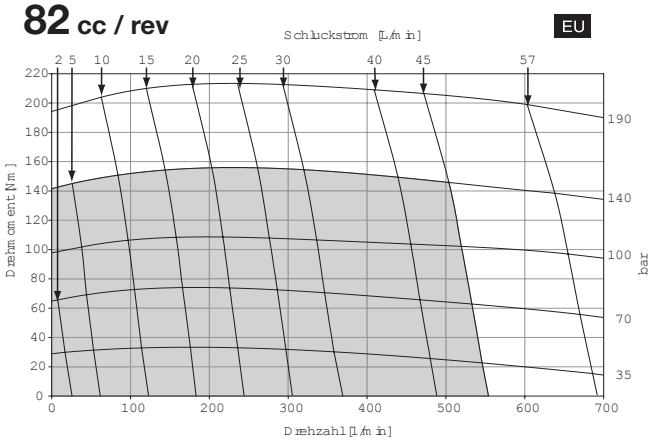

Cont. Int.

Intermittent operation rating applies to 10% of every minute.

Fonctionnement interm. 10% max. de chaque minute d`utilisation.

Performance data based on testing using 10W40 oil with a viscosity of 200 SUS at 54° C (130° F.). Performance data is typical. Actual data may vary slightly from one production motor to another.

Les donnees sur les performances sont basees sur des tests utilisant de l'huile 10W40 d'une viscosite de 200 SUS a 54°C (130°F). Ces donnees correspondent a des situations typiques. Les donnees reelles peuvent varier legerement d'un moteur de production a l'autre.

Intermittierende Werte maximal 10% von jeder Betriebsminute.

Capacidad de funcionamiento intermitente valida para 6 segundos por cada minuto.

Leistungsdaten sind gemessen mit SAE 10W40 bei einer Viskositaet von 43,1 Cst bei 54°C. Geringfuegige Abweichungen von den Katalogdaten sind moeglich.

Datos tecnicos obtenidos con aceite 10W40 de 200 SUS de viscosidad a 54°C (130°F). Los datos proporcionados son valores tipcos. Los valores exactos reales podrian tener una pequena variacion entre distintos motores.

TJ 0100 — 6.0 cu in / rev

PRESSURE (PSID)

Flow (GPM)	500	1000	1500	2000	2750
.5	315 **14**	687 **7**			
1	332 **33**	710 **26**	1083 **18**	1460 **9**	
2	348 **71**	751 **64**	1152 **55**	1541 **45**	2081 **27**
3	350 **109**	756 **102**	1160 **92**	1556 **83**	2145 **62**
4	353 **147**	768 **140**	1185 **130**	1596 **120**	2193 **99**
5	349 **186**	771 **178**	1197 **168**	1622 **158**	2220 **138**
7	330 **263**	759 **254**	1191 **244**	1624 **232**	2251 **209**
9	302 **340**	731 **330**	1167 **319**	1606 **307**	2251 **284**
12	243 **456**	671 **444**	1111 **433**	1555 **420**	2193 **394**
15	176 **572**	606 **558**	1042 **546**	1484 **533**	2113 **506**

TORQUE (LB IN) 2251
SPEED (RPM) 209

98 cc / rev

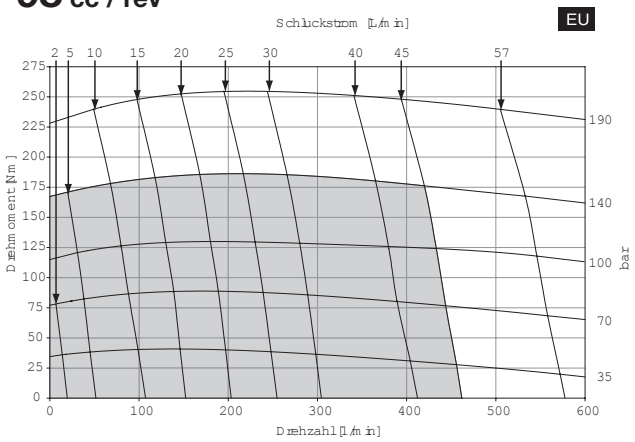

TJ 0130 — 8.0 cu in / rev

PRESSURE (PSID)

Flow (GPM)	500	1000	1500	2000	2750
.5	445 **12**	962 **10**	1488 **7**	2018 **3**	
1	464 **27**	996 **24**	1525 **21**	2051 **17**	2839 **4**
2	482 **55**	1032 **53**	1584 **49**	2136 **44**	2917 **31**
3	483 **84**	1037 **81**	1594 **77**	2150 **72**	2979 **60**
4	483 **113**	1051 **110**	1619 **105**	2184 **100**	3018 **87**
5	478 **142**	1050 **138**	1625 **133**	2201 **128**	3041 **115**
7	450 **200**	1029 **195**	1613 **190**	2195 **183**	3049 **170**
9	414 **257**	993 **252**	1579 **247**	2166 **239**	3033 **223**
12	338 **344**	915 **338**	1503 **331**	2096 **323**	2963 **306**
15	252 **431**	827 **424**	1408 **416**	1996 **407**	2854 **389**

TORQUE (LB IN) 3049
SPEED (RPM) 170

130 cc / rev

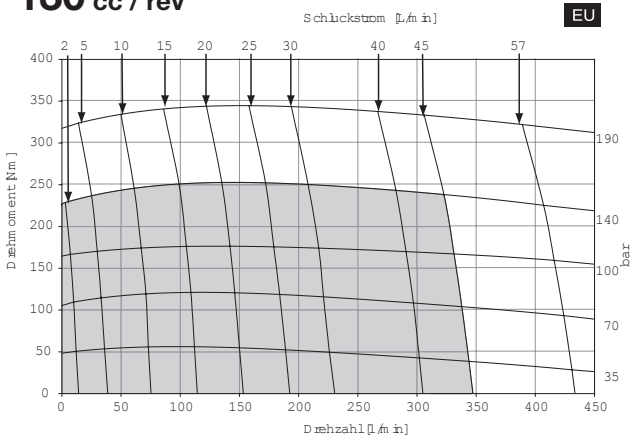

Cont. Int.

Intermittent operation rating applies to 10% of every minute.

Fonctionnement interm. 10% max. de chaque minute d`utilisation.

Performance data based on testing using 10W40 oil with a viscosity of 200 SUS at 54° C (130° F.). Performance data is typical. Actual data may vary slightly from one production motor to another.

Les donnees sur les performances sont basees sur des tests utilisant de l'huile 10W40 d'une viscosite de 200 SUS a 54°C (130°F). Ces donnees correspondent a des situations typiques. Les donnees reelles peuvent varier legerement d'un moteur de production a l'autre.

Intermittierende Werte maximal 10% von jeder Betriebsminute.

Capacidad de funcionamiento intermitente valida para 6 segundos por cada minuto.

Leistungsdaten sind gemessen mit SAE 10W40 bei einer Viskositaet von 43,1 Cst bei 54°C. Geringfuegige Abweichungen von den Katalogdaten sind moeglich.

Datos tecnicos obtenidos con aceite 10W40 de 200 SUS de viscosidad a 54°C (130°F). Los datos proporcionados son valores tipcos. Los valores exactos reales podrian tener una pequena variacion entre distintos motores.

TJ 0165

10.0 cu in / rev PRESSURE (PSID)

	500	1000	1500	2000	2750
.5	552 **9**	1175 **7**	1813 **4**	2457 **3**	
1	574 **21**	1213 **18**	1856 **16**	2499 **12**	3472 **6**
2	597 **44**	1263 **41**	1938 **38**	2614 **33**	3576 **25**
3	600 **67**	1273 **64**	1955 **60**	2634 **55**	3654 **46**
4	603 **90**	1299 **87**	1997 **83**	2691 **78**	3706 **67**
5	597 **113**	1302 **109**	2015 **105**	2727 **100**	3758 **89**
7	569 **159**	1286 **155**	2009 **150**	2732 **144**	3784 **133**
9	523 **205**	1244 **201**	1976 **195**	2707 **189**	3766 **177**
12	429 **274**	1152 **269**	1890 **263**	2630 **256**	3697 **242**
15	316 **344**	1039 **338**	1769 **331**	2500 **323**	3576 **308**

Flow (GPM)

163 cc / rev

EU

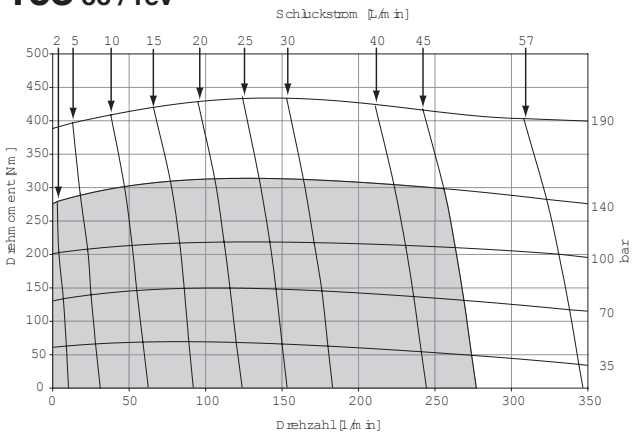

TORQUE (LB IN) 3784
SPEED (RPM) 133

TJ 0195

11.9 cu in / rev PRESSURE (PSID)

	500	1000	1500	2000	2500
.5	710 **8**	1519 **7**	2344 **5**	3182 **3**	
1	736 **18**	1558 **16**	2387 **14**	3221 **12**	4466 **6**
2	758 **37**	1596 **35**	2445 **33**	3302 **30**	4528 **22**
3	758 **56**	1604 **54**	2459 **51**	3315 **48**	4600 **39**
4	757 **75**	1618 **73**	2482 **70**	3346 **67**	4620 **56**
5	747 **95**	1615 **92**	2488 **89**	3360 **85**	4630 **74**
7	705 **133**	1586 **130**	2467 **127**	3343 **122**	4620 **111**
9	646 **172**	1528 **169**	2415 **165**	3300 **160**	4579 **147**
12	530 **230**	1408 **226**	2303 **221**	3197 **215**	4497 **201**
15	394 **288**	1273 **283**	2147 **278**	3027 **272**	4292 **256**

Flow (GPM)

195 cc / rev

EU

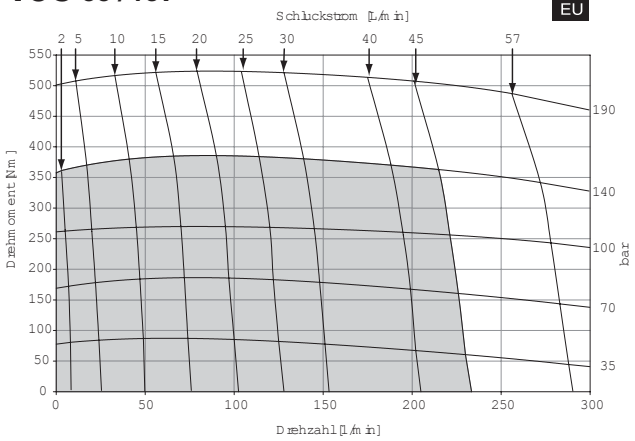

TORQUE (LB IN) 4620
SPEED (RPM) 111

Cont. Int.

Intermittent operation rating applies to 10% of every minute.

Fonctionnement interm. 10% max. de chaque minute d`utilisation.

Performance data based on testing using 10W40 oil with a viscosity of 200 SUS at 54° C (130° F.). Performance data is typical. Actual data may vary slightly from one production motor to another.

Les donnees sur les performances sont basees sur des tests utilisant de l'huile 10W40 d'une viscosite de 200 SUS a 54°C (130°F). Ces donnees correspondent a des situations typiques. Les donnees reelles peuvent varier legerement d'un moteur de production a l'autre.

Intermittierende Werte maximal 10% von jeder Betriebsminute.

Capacidad de funcionamiento intermitente valida para 6 segundos por cada minuto.

Leistungsdaten sind gemessen mit SAE 10W40 bei einer Viskositaet von 43,1 Cst bei 54°C. Geringfuegige Abweichungen von den Katalogdaten sind moeglich.

Datos tecnicos obtenidos con aceite 10W40 de 200 SUS de viscosidad a 54°C (130°F). Los datos proporcionados son valores tipcos. Los valores exactos reales podrian tener una pequena variacion entre distintos motores.

TJ 0230

13.9 cu in / rev PRESSURE (PSID)

Flow (GPM)	500	1000	1500	1750	2000	2400
.5	761 **7**	1673 **6**	2614 **5**	3094 **4**	3584 **3**	4347 **3**
1	791 **15**	1712 **14**	2650 **13**	3128 **12**	3615 **11**	4367 **9**
2	819 **32**	1764 **30**	2726 **29**	3208 **28**	3692 **26**	4450 **24**
3	819 **48**	1771 **47**	2737 **45**	3226 **44**	3718 **42**	4502 **41**
4	821 **65**	1787 **63**	2765 **61**	3256 **60**	3750 **58**	4533 **56**
5	808 **81**	1786 **79**	2777 **77**	3277 **76**	3778 **74**	4554 **73**
7	770 **114**	1756 **112**	2755 **109**	3255 **108**	3760 **106**	4554 **104**
9	705 **147**	1699 **145**	2710 **142**	3216 **140**	3724 **138**	4512 **137**
12	581 **197**	1582 **194**	2595 **191**	3103 **189**	3617 **186**	4378 **183**
15	400 **247**	1409 **243**	2437 **239**	2949 **237**	3466 **235**	4232 **230**
20	64 **329**	1052 **325**	2067 **321**	2580 **319**	3100 **316**	3828 **311**

TORQUE (LB IN) 4554
SPEED (RPM) 104

228 cc / rev

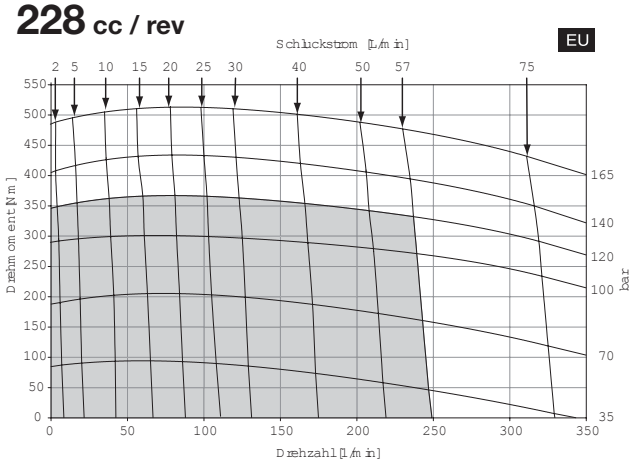

TJ 0260

15.9 cu in / rev PRESSURE (PSID)

Flow (GPM)	500	1000	1500	1650	2250
.5	908 **7**	1961 **6**	3048 **6**	3380 **6**	4643 **5**
1	938 **14**	2006 **13**	3099 **13**	3433 **12**	4674 **11**
2	971 **28**	2059 **27**	3165 **26**	3501 **26**	4758 **23**
3	968 **43**	2065 **42**	3177 **40**	3514 **39**	4800 **38**
4	970 **57**	2081 **56**	3203 **54**	3541 **53**	4742 **50**
5	957 **71**	2084 **70**	3219 **68**	3561 **67**	4874 **64**
7	907 **100**	2049 **98**	3198 **96**	3542 **95**	4842 **91**
9	837 **129**	1985 **127**	3143 **124**	3489 **123**	4790 **117**
12	692 **172**	1844 **169**	3016 **166**	3367 **164**	4685 **157**
15	489 **215**	1647 **212**	2830 **208**	3188 **206**	4485 **200**
20	129 **287**	1255 **283**	2418 **279**	2773 **277**	4034 **270**

TORQUE (LB IN) 4842
SPEED (RPM) 91

260 cc / rev

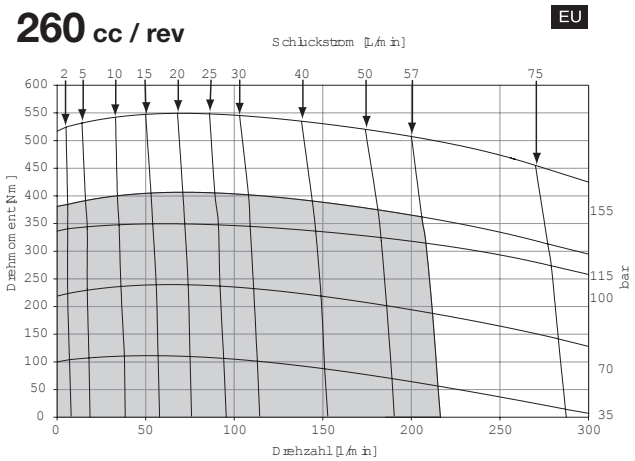

Cont. Int.

Intermittent operation rating applies to 10% of every minute.

Fonctionnement interm. 10% max. de chaque minute d`utilisation.

Performance data based on testing using 10W40 oil with a viscosity of 200 SUS at 54° C (130° F.). Performance data is typical. Actual data may vary slightly from one production motor to another.

Les donnees sur les performances sont basees sur des tests utilisant de l'huile 10W40 d'une viscosite de 200 SUS a 54°C (130°F). Ces donnees correspondent a des situations typiques. Les donnees reelles peuvent varier legerement d'un moteur de production a l'autre.

Intermittierende Werte maximal 10% von jeder Betriebsminute.

Capacidad de funcionamiento intermitente valida para 6 segundos por cada minuto.

Leistungsdaten sind gemessen mit SAE 10W40 bei einer Viskositaet von 43,1 Cst bei 54°C. Geringfuegige Abweichungen von den Katalogdaten sind moeglich.

Datos tecnicos obtenidos con aceite 10W40 de 200 SUS de viscosidad a 54°C (130°F). Los datos proporcionados son valores tipcos. Los valores exactos reales podrian tener una pequena variacion entre distintos motores.

TJ 0295

17.9 cu in / rev PRESSURE (PSID)

Flow (GPM)	500	1000	1500	1550	2100
.5	1014 **6**	2216 **5**	3453 **4**	3576 **4**	4907 **3**
1	1051 **12**	2270 **11**	3509 **10**	3633 **10**	4943 **8**
2	1088 **25**	2334 **24**	3600 **22**	3727 **22**	5073 **21**
3	1085 **38**	2338 **36**	3611 **35**	3739 **34**	5133 **33**
4	1085 **50**	2353 **49**	3639 **47**	3769 **47**	5156 **44**
5	1072 **63**	2352 **62**	3654 **60**	3784 **59**	5180 **57**
7	1019 **89**	2311 **87**	3624 **85**	3755 **84**	5157 **80**
9	939 **115**	2237 **113**	3561 **110**	3693 **110**	5085 **104**
12	776 **153**	2074 **151**	3403 **148**	3537 **147**	4931 **142**
15	545 **192**	1853 **189**	3184 **186**	3319 **185**	4694 **180**
20	126 **256**	1408 **253**	2697 **249**	2826 **249**	4089 **243**

TORQUE (LB IN) 5157
SPEED (RPM) 80

293 cc / rev

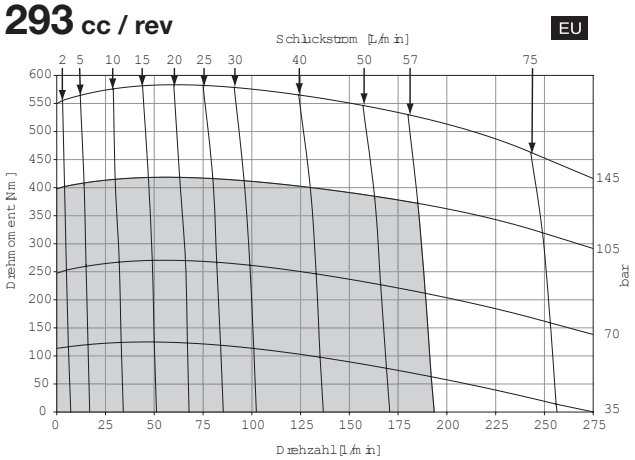

TJ 0330

20.0 cu in / rev PRESSURE (PSID)

Flow (GPM)	500	1000	1500	1950
.5	1184 **5**	2507 **5**	3722 **4**	5051 **2.8**
1	1218 **11**	2558 **10**	3772 **9**	5110 **7.9**
2	1258 **22**	2632 **21**	3867 **20**	5204 **18.6**
3	1251 **34**	2633 **32**	3879 **31**	5275 **29.9**
4	1249 **45**	2649 **44**	3909 **42**	5311 **39.9**
5	1229 **57**	2648 **55**	3926 **53**	5323 **50**
7	1162 **80**	2600 **78**	3898 **75**	5311 **71**
9	1064 **103**	2518 **100**	3829 **98**	5228 **93**
12	875 **137**	2333 **135**	3657 **131**	5027 **127**
15	621 **171**	2081 **169**	3420 **165**	4779 **160**
20	163 **229**	1576 **226**	2875 **222**	4140 **214**

TORQUE (LB IN) 5311
SPEED (RPM) 71

328 cc / rev

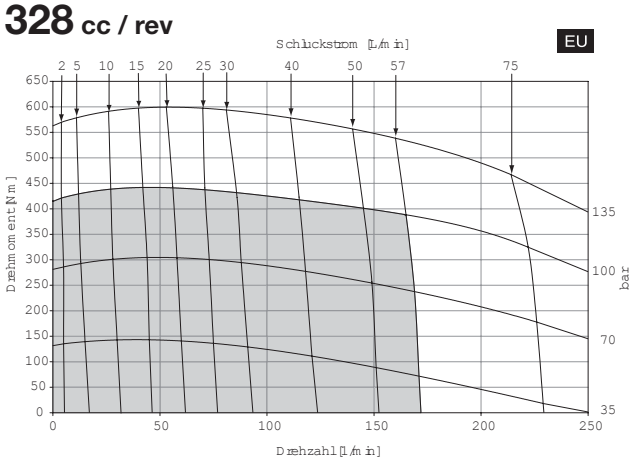

Cont. Int.

Intermittent operation rating applies to 10% of every minute.

Fonctionnement interm. 10% max. de chaque minute d`utilisation.

Performance data based on testing using 10W40 oil with a viscosity of 200 SUS at 54° C (130° F.). Performance data is typical. Actual data may vary slightly from one production motor to another.

Les donnees sur les performances sont basees sur des tests utilisant de l'huile 10W40 d'une viscosite de 200 SUS a 54°C (130°F). Ces donnees correspondent a des situations typiques. Les donnees reelles peuvent varier legerement d'un moteur de production a l'autre.

Intermittierende Werte maximal 10% von jeder Betriebsminute.

Capacidad de funcionamiento intermitente valida para 6 segundos por cada minuto.

Leistungsdaten sind gemessen mit SAE 10W40 bei einer Viskositaet von 43,1 Cst bei 54°C. Geringfuegige Abweichungen von den Katalogdaten sind moeglich.

Datos tecnicos obtenidos con aceite 10W40 de 200 SUS de viscosidad a 54°C (130°F). Los datos proporcionados son valores tipcos. Los valores exactos reales podrian tener una pequena variacion entre distintos motores.

TJ 0365 — 22.6 cu in / rev

PRESSURE (PSID)

Flow (GPM)	500	1000	1325	1825
.5	1393 **5**	2942 **4**	3974 **4**	5557 **3**
1	1444 **10**	3005 **9**	4036 **8**	5595 **7**
2	1494 **20**	3090 **19**	4131 **18**	5671 **17**
3	1485 **30**	3082 **29**	4125 **28**	5722 **27**
4	1477 **40**	3089 **39**	4139 **37**	5734 **36**
5	1452 **50**	3075 **49**	4130 **47**	5734 **45**
7	1371 **70**	3009 **69**	4071 **67**	5671 **63**
9	1260 **90**	2899 **89**	3669 **87**	5532 **84**
12	1002 **121**	2658 **119**	3737 **117**	5266 **113**
15	700 **151**	2355 **149**	3432 **146**	4937 **142**
20	152 **201**	1776 **199**	2838 **196**	4228 **191**

TORQUE (LB IN) 5671
SPEED (RPM) 63

370 cc / rev

EU

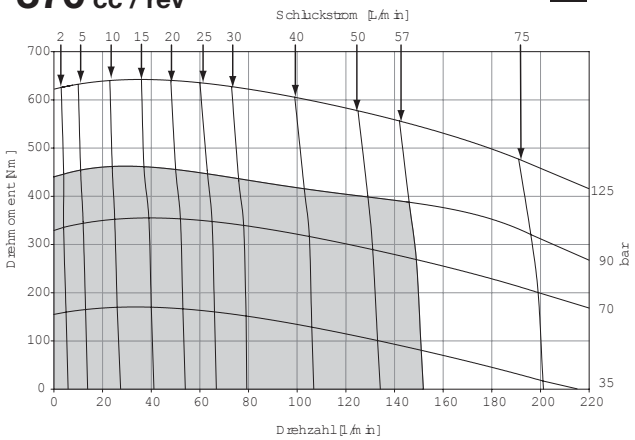

TJ 0390 — 24.0 cu in / rev

PRESSURE (PSID)

Flow (GPM)	500	1000	1250	1750
.5	1326 **4**	2889 **3**	3682 **2**	5235 **2**
1	1380 **9**	2934 **7**	3724 **7**	5296 **6**
2	1443 **18**	3034 **17**	3840 **15**	5383 **13**
3	1442 **28**	3049 **26**	3861 **25**	5457 **22**
4	1454 **37**	3084 **36**	3905 **34**	5531 **32**
5	1447 **47**	3104 **45**	3935 **44**	5543 **40**
7	1393 **66**	3080 **64**	3923 **62**	5568 **60**
9	1297 **85**	3013 **83**	3868 **81**	5494 **79**
12	1088 **114**	2818 **112**	3686 **110**	5296 **106**
15	797 **143**	2539 **140**	3414 **138**	5000 **135**
20	264 **191**	2006 **188**	2880 **186**	4358 **182**

TORQUE (LB IN) 5568
SPEED (RPM) 60

392 cc / rev

EU

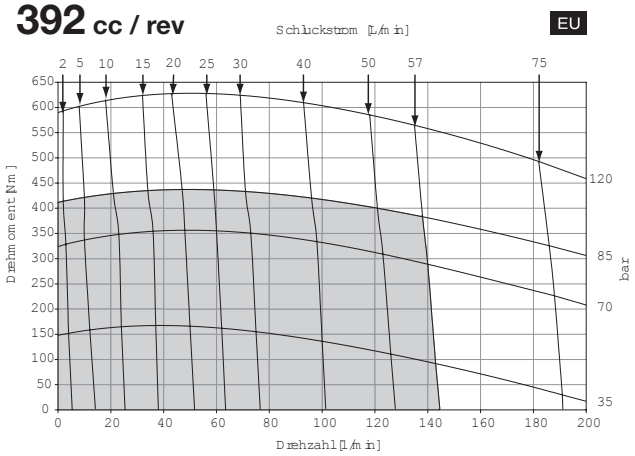

Cont. Int.

Intermittent operation rating applies to 10% of every minute.

Fonctionnement interm. 10% max. de chaque minute d`utilisation.

Performance data based on testing using 10W40 oil with a viscosity of 200 SUS at 54° C (130° F.). Performance data is typical. Actual data may vary slightly from one production motor to another.

Les donnees sur les performances sont basees sur des tests utilisant de l'huile 10W40 d'une viscosite de 200 SUS a 54°C (130°F). Ces donnees correspondent a des situations typiques. Les donnees reelles peuvent varier legerement d'un moteur de production a l'autre.

Intermittierende Werte maximal 10% von jeder Betriebsminute.

Capacidad de funcionamiento intermitente valida para 6 segundos por cada minuto.

Leistungsdaten sind gemessen mit SAE 10W40 bei einer Viskositaet von 43,1 Cst bei 54°C. Geringfuegige Abweichungen von den Katalogdaten sind moeglich.

Datos tecnicos obtenidos con aceite 10W40 de 200 SUS de viscosidad a 54°C (130°F). Los datos proporcionados son valores tipcos. Los valores exactos reales podrian tener una pequena variacion entre distintos motores.

Wheel Mount / Radnabengehaeuse
Monture à roue / Montaje de rueda

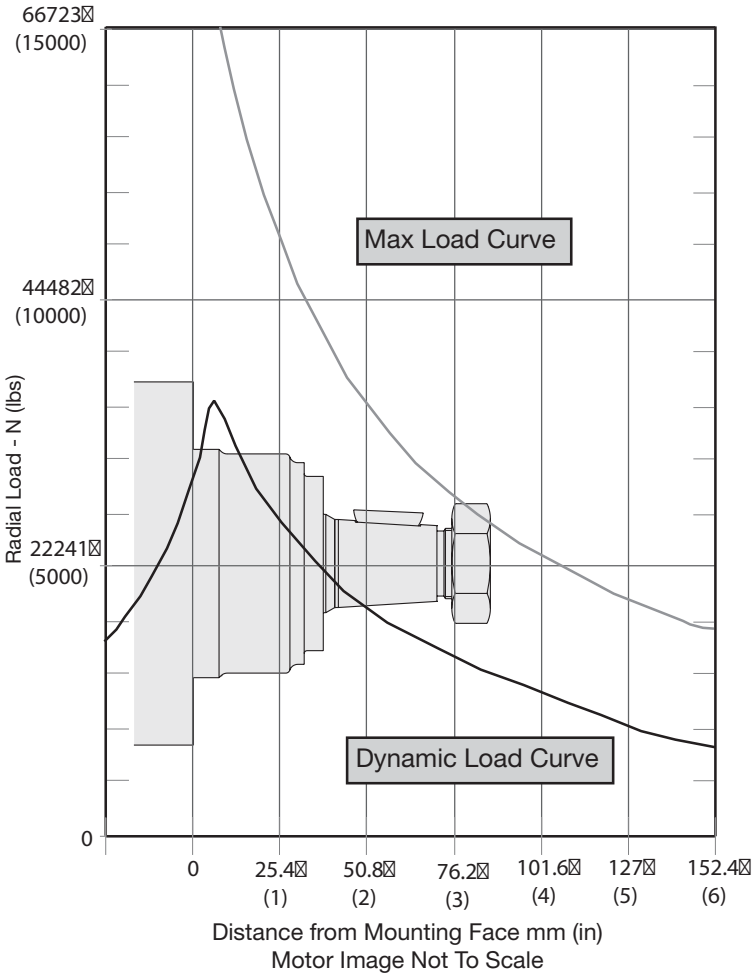

The maximum load curve is defined by bearing static load capacity. This curve should not be exceeded at any time including shock loads.

Die maximale radiale Wellenbelastungskurve ist definiert als maximale statische Last ohne Drehzahl. Sie gilt als Grenze und sollte keinesfalls überschritten werden.

La courbe de charge maximale est définie par la capacité de charge statique portante. Cette courbe ne devrait être dépassée en aucun moment y compris pour les charges par à-coups.

La curva de carga máxima queda definida por la capacidad de carga estática del cojinete. No se deben superar los valores de esta curva, ni siquiera con cargas provisorias de impacto.

The dynamic side load curve is based on unidirectional steady state loads for L_{10} bearing life at 3 x 10^6 revolutions.

Die zulässige auslegbare radiale Wellenbelastungskurve ist unter ruhenden, einseitig statisch gerichteten Lastverhältnissen auf eine L_{10} Lebensdauer mit 3 x 10^6 Umdrehungen kalkuliert.

La courbe de charge latérale permise se base sur des charges unidirectionnelles en régime permanent pour le roulement L_{10} à 3 x 10^6 révolutions.

La curva de valores admisibles de carga lateral está basada en cargas constantes para cojinetes L_{10} a 3 x 10^6 revoluciones.

Equation to Calculate the Expected Radial Bearing Life
Gelichung zur Ermittlung der Lagerlebensdauer

Equation to calculate the dynamic bearing life for a given load:
Bestimmung der erlaubten radialen Wellenbelastung mit vorgegebener Last

Use F_a, F_b and S in equation to determine hours of L_{10} bearing life.
Die Lebensdauer in Stunden ergibt sich durch einsetzen von F_a, F_b, und S in die nachstehende Formel.

$$L = \frac{3 \times 10^6}{60 \times S} \left\{ \frac{F_a}{F_b} \right\}^{3.33}$$

Where / Mit:

S = Shaft Speed RPM / Abtriebswellendrehzahl in min^{-1}
L = Life In Hours / Lebensdauer in Stunden
F_a = Dynamic side load defined by above curve at a distance from mounting flange. / Erlaubte radiale Wellenbelastung als Function der Laenge
F_b = Application side load. / Anwendungsseitige Wellenbelastung

Note: Calculations are based on L_{10} bearing life per ISO 281.
Auslegung basiert auf einer L_{10} Lenbendauer nach ISO 281

006 TJ.indd, js

Parker Hannifin Corporation
Hydraulic Pump/Motor Division
Greeneville, Tennessee, USA

Code: US

Wheel Mount, 7/8-14 SAE O-Ring

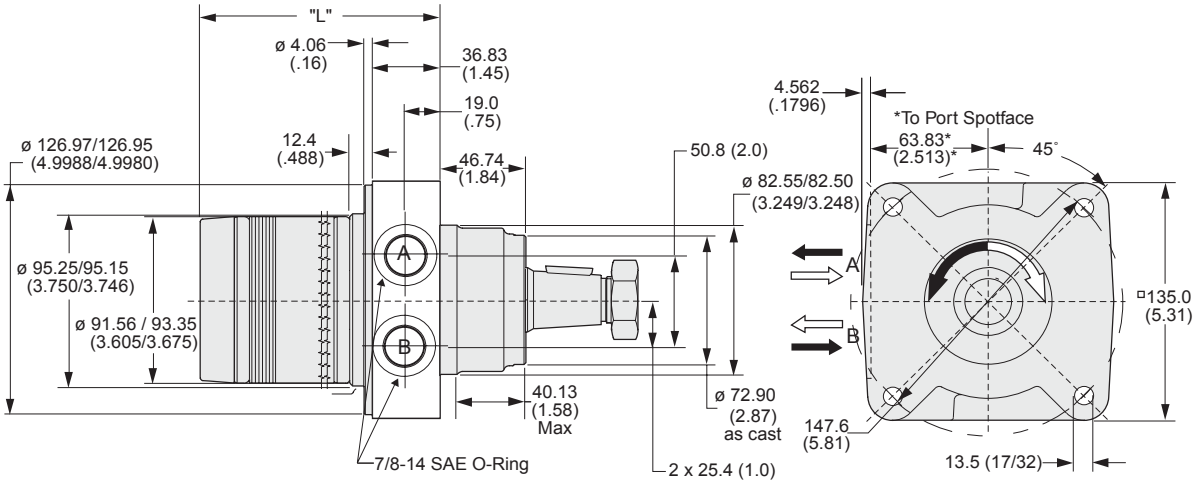

Code US disp.	0045	0050	0065	0080	0100	0130	0165	0195	0230	0260	0295	0330	0365	0390
Weight/Gewicht kg	**6.80**	**6.90**	**7.00**	**7.10**	**7.20**	**7.60**	**7.80**	**8.10**	**8.30**	**8.60**	**8.80**	**9.10**	**9.40**	**9.60**
Poids/Peso (lb)	(15.0)	(15.2)	(15.4)	(15.6)	(15.8)	(16.7)	(17.2)	(17.9)	(18.3)	(19.0)	(19.4)	(20.0)	(20.7)	(21.2)
Length "L" mm	**107**	**109**	**112**	**115**	**118**	**125**	**131**	**137**	**144**	**150**	**156**	**163**	**171**	**176**
"L" (in)	(4.21)	(4.27)	(4.39)	(4.52)	(4.64)	(4.89)	(5.14)	(5.39)	(5.64)	(5.89)	(6.14)	(6.39)	(6.73)	(6.89)

English equivalents for metric specifications are shown in ( ).

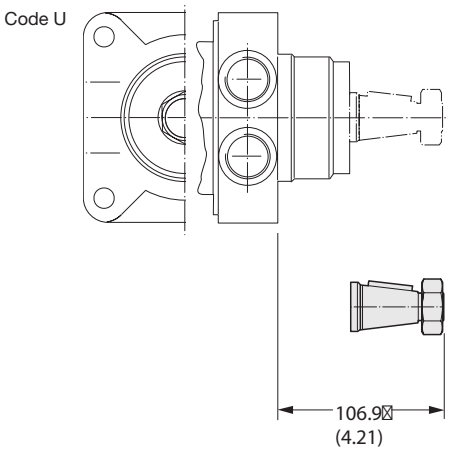

Code: 08

1 1/4" Tapered

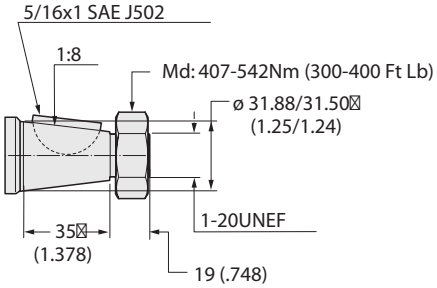

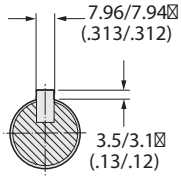

English equivalents for metric specifications are shown in ( ).

Code: AAAC US

Double Paint — Base coat of red oxide primer and finish coat of black paint for increased corrosion resistance.

Code AAAF* or AABP EU US

Castle Nut — All motors ordered with Tapered shafts are equipped with patch locking nuts. If desired, a castle nut may be specified.

Code: AAAJ* or AAFG EU US

Vespel™ Commutator Seal — Under conditions of high temperature, it is suggested that a vespel commutator seal be used to optimize volumetric efficiency.

Code: AAAG* or AAAH EU US

Fluorocarbon shaft and section seals is available under various registered trademarks, including **VITON™** (a registered trademark of DuPont), **FLUOREL™** (a registered trademark of 3M) or **FPM™** (a registered trademark of DuPont).

Code: AABJ* or AABK EU US

Free Running Rotorset — The “free running rotorset” is a specially dimensioned rotorset that allows for smooth operation at low flows and low pressure. Volumetric efficiency can be affected.

Code: AANM* EU US

Seal Saver — Seal saver is a metal disc that presses onto the motor shaft, covering the dirt and water (D&W) seal. It’s purpose is to aid in preventing external contamination from damaging the D&W seal.

Code: AAAC

Zweischichtlackierung schwarz

Code AAAF* or AABP

Kronenmutter
Selbstsichernde Mutter wird ersetzt durch

Kronenmutter

Code: AAAJ* or AAFG

Vespel™ / Kommutator Dichtung
Für Anwendungen im höheren Temperaturbereich

oder nicht ausreichender Schmierung.

Code: AAAG* or AAAH

Fluorocarbon Dichtungen
Für Anwendungen im höheren/niedrigeren Temperaturbereich oder speziellen Flüssigkeiten wird der Einsatz von Fluorcarbon Dichtungen empfohlen.
Fluorocarbon ist bekannt unter verschiedenen eingetragenen Warenzeichen

VITON™ - DuPont, Fluorel™ - 3M, FPM™ - DuPont

Code: AABJ* or AABK

Leichtläufer Rotorsatz
Anlaufdruck < 5 bar

Code: AANM*

Versiegelungsschutz — Der Versiegelungsschutz besteht aus einer Metallscheibe, die gegen die Antriebswelle druckt und damit Schmutz- und Wasserdichtung (D&W-Dichtung) abdeckt. Hierdurch soll einer Beschadigung der D&W-Dichtung auf Grund externer Verunreinigungen vorgebeugt werden.

* Option code shown is with a single black coat of paint.
* Motor schwarz grundiert
* Le code d’option montré correspond à une seule couche de peinture noire.
* El código de la opción mostrado es con una sola capa de pintura negra.

Availability / Verfugbarkeit	Code Painted	Code Unpainted	
TJ	**Lackiert**	**Unlackiert**	**Description / Beschreibung**
US	AAAA		Black Paint
US		AAAB	No Paint
US	AAAC	-	Double Paint / Zweischichten – Lackierung
US	AAAF	AABP	Castle Nut / Kronenmutter
US	AAAG	AAAH	Fluorocarbon Seals / Fluorocarbon Dichtungen
US	AAAJ	AAFG	Vespel™ Commutator Seal / Vespel™ Kommutator Dichtung
US	AABJ*	AABK*	Free Running Rotorset / Leichtläufer-Rotorsatz
US	AAPL		Fluorocarbon Seals, Castle Nut, Black Paint
US	AAUA		Double Paint, Free Running Rotorset
US		AAXD	Fluorocarbon Seals, No Commutator Seal, No Paint
Consult factory for other positions and combinations. / Weitere Optionen nach Rücksprache verfügbar			

* Not applicable to TJ 0365 or TJ 0390 displacements.
* Nicht verfugbar fur TJ 0365 and TJ 0390.

Consult factory for other available options, configurations ordering codes and lead times.

11 Displacements **11 Schluckvolumen** **11 Cylindrée** **11 Despazamientos**		(4.9 - 29.1 in³/rev) **81 . . . 477 cm³/rev**
	Cont.	**Int.**
Maximum Pressure **Eingangsdruck** **Pression entrée** **Presion Maxima**	(3000 psid) **. . . 207 bar**	(4000 psid) **. . . 276 bar**
Maximum Oil Flow **Schluckstrom** **Débit d'huile** **Caudal Maximo de Aceite**		(25 gpm) **. . . 95 lpm**
Maximum Speed **Drehzahl** **Vitesse de rotation** **Velocidad Maxima**		(749 rpm) **749 rpm**
	Cont.	**Int.**
Maximum Torque **MaxDrehmoment** **Couple** **Torque Maximo**	(6027 lb in) **681 Nm**	(8106 lb in) **916 Nm**
Maximum Side Load at Key **Seitenlast** **Charges latèrales** **Carga Maxima Lateral**		(3597 lb) **. . . 16000 N**

A Tough Motor for Tough Applications

Sturdy construction throughout makes Parker's TF Series motors suitable for the most severe applications. The powertrain uses patented 60:40 spline geometry for strength. All splines are constantly flushed with cool fluid for durability. Roller vanes and sealed commutation assure high volumetric efficiency, smooth low speed operation and extended life. Shaft seals can withstand full system pressure and are washed in cool fluid for long life.

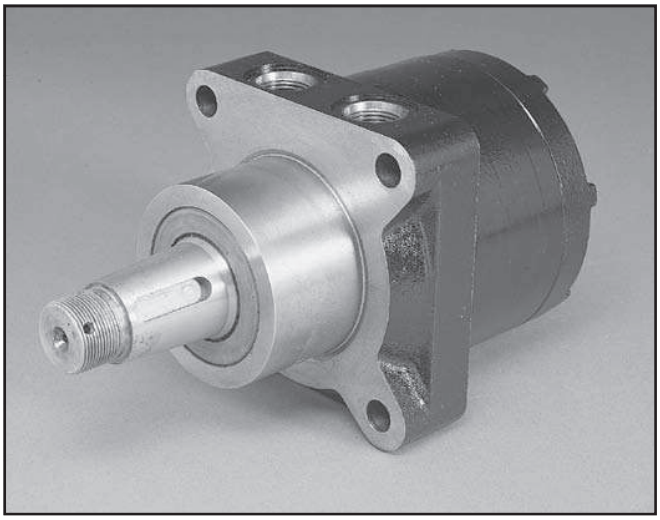

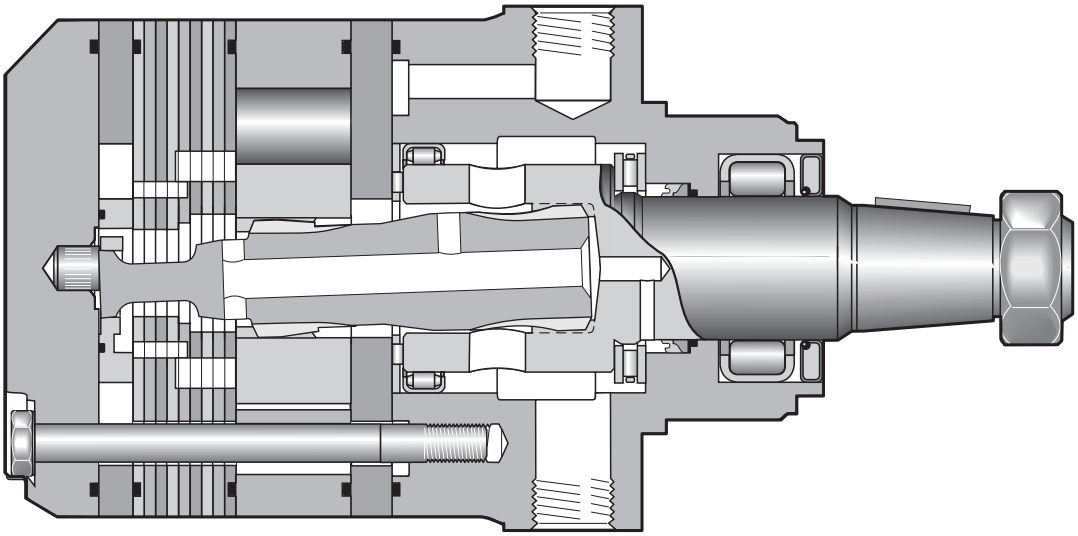

TF — Series

XXXX — Displacement / Schluckvolumen / Cylindrée / Desplazamiento

Code	cm³/U cm³/tr cm³/giro	in³/rev
0080	81	4.9
0100	100	6.1
0130	128	7.8
0140	141	8.6
0170	169	10.3
0195	197	11.9
0240	238	14.5
0280	280	17.1
0360	364	22.2
0405	405	24.7
0475	477	29.1

XX — Mounting / Gehäuse / Carter / Montaje

Code	Mounting
A	SAE "A" 2 Bolt
B	SAE "B" 2 Bolt 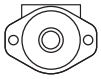
L	Wheel, Front Brake
M	Magneto
U	Wheel, Standard
W*	Wheel, Optional
D*	Large Wheel Mount
V*	SAE "A" 4 Bolt

*Requires rear porting

XX — Ports / Anschluß / Plan de raccordement / Lumbreras

Code	Ports
A	7/8-14 SAE O-Ring; Rear Axial 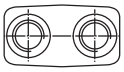
B	7/8-14 SAE O-Ring; Rear Radial 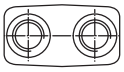
E	Manifold; Rear Radial 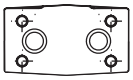
H	ISO 6149 M22 x 1.5 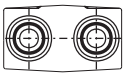
M*	5/16-18 UNC Manifold 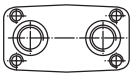
S	7/8-14 SAE 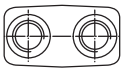

*Not available on L, U or W mounting.

For other available options, see pages 257–258.

XX

Shaft
Welle
Arbre
Eje

Code	Shaft
01*	1" 6B Spline
02*	1" Keyed
03	1 1/4" Keyed
04	10B Spline
05	1 1/4" 14 Tooth Spline
06	19 Tooth Spline
07	15 Tooth Spline
08	1 1/4" Tapered
22	25mm Keyed
28	13 Tooth Spline

0

Rotation
Drehrichtung
Direction de rotation
Rotacion

Code	Rotation
0	Standard B A
1	Reverse Timed Manifold B A

Code	Rear Rotation
0	Standard
1	Reverse Timed Manifold

Rotation viewed from shaft end.

XXXX

Options
Opciones

Code	Options
AAAA	Black Paint
AAAB	No Paint
AAAC	Double Paint
AAAF***	Castle Nut, Black Paint
AABP***	Castle Nut, No Paint
AAAG	Viton Seals, Black Paint
AAAH	Viton Seals, No Paint
AAAJ	Vespel Commutator Seal, Black Paint
AAFG	Vespel Commutator Seal, No Paint
AAAT*	Bidirectional Shuttle (11:00**), Black Paint
AAFX*	Bidirectional Shuttle (11:00**), No Paint
AAAU*	Bidirectional Shuttle (11:00**), Castle Nut, Black Paint
AAGF*	Bidirectional Shuttle (11:00**), Castle Nut, No Paint
AABJ	Free Running Rotorset, Black Paint
AABK	Free Running Rotorset, No Paint
AABL	Free Running Rotorset, No Commutator Seal, Black Paint
AABM	Free Running Rotorset, No Commutator Seal, No Paint

* Not available with A, B or E porting
** Shuttle port position as viewed from shaft end of motor
*** Available only with shaft code 08

* Abtriebswelle	Ø 25mm	Max. Moment cont./int.	450/550 Nm
Coupling shaft	Ø 1 inch	Max. torque cont./int.	
Arbre	6B SAE	Couple maxi cont./int.	
Eje de acoplamiento		Coppia max cont./int.	

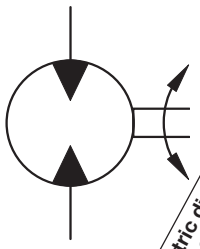

Motor Series TF	Geometric displacement / Geom. Schluckvolumen / Cylindrée / Cilindrata	Max. speed @ Max. intermittent flow / Max. Drehzahl Intermittierender Betrieb: / Vitesse de rotation maxi / Velocidad maxima a caudal intermitente maximo	Max. oil flow / Max. Schluckstrom / Débit d'huile maxi / Portata max		Max. differential pressure / Max. Druckgefälle / Chute de pression maxi / Presion diferencial maxima		Max. supply pressure / Max. Eingangsdruck / Pression maxi entrée / Presion maxima de alimentacion	Max. torque / Max. Drehmoment / Couple maxi / Torque Maximo		Max. performance / Max. Leistungabgabe / Puissance de sortie maxi / Maximo rendimiento	Min. starting torque / Min. Anlaufmoment / Couple min. fourni au dé manrage / Torque minimo de arranque	
	cm³/rev in³/rev	rev/min	***cont / int**** **l/min** g/min		***cont / int**** **bar** psid		***max*** **bar** psig	***cont / int**** **Nm** lb-in		***max*** **KW** HP	***cont / int**** **Nm** lb-in	
TF 0080	**81** 4.9	693	**46** 12	**57** 15	**207** 3000	**276** 4000	**300** 4350	**220** 1948	**296** 2621	**21.5** 28.8	**158** 1401	**205** 1811
TF 0100	**100** 6.1	749	**57** 15	**76** 20	**155** 2250	**241** 3500	**300** 4350	**197** 1746	**318** 2813	**24.9** 33.4	**148** 1309	**243** 2155
TF 0130	**128** 7.8	583	**57** 15	**76** 20	**138** 2000	**207** 3000	**300** 4350	**229** 2031	**356** 3148	**21.7** 29.1	**180** 1596	**278** 2460
TF 0140	**141** 8.6	530	**57** 15	**76** 20	**138** 2000	**207** 3000	**300** 4350	**254** 2248	**393** 3477	**21.8** 29.2	**196** 1739	**308** 2728
TF 0170	**169** 10.3	444	**57** 15	**76** 20	**138** 2000	**207** 3000	**300** 4350	**317** 2808	**489** 4324	**22.7** 30.5	**243** 2152	**385** 3404
TF 0195	**197** 12.0	381	**57** 15	**76** 20	**138** 2000	**207** 3000	**300** 4350	**364** 3222	**562** 4971	**22.4** 30.1	**302** 2671	**468** 4142
TF 0240	**238** 14.5	394	**76** 20	**95** 25	**138** 2000	**207** 3000	**300** 4350	**427** 3782	**670** 5928	**27.7** 37.1	**366** 3242	**572** 5058
TF 0280	**280** 17.1	334	**76** 20	**95** 25	**138** 2000	**207** 3000	**300** 4350	**509** 4502	**794** 7029	**27.8** 37.3	**438** 3876	**672** 5946
TF 0360	**364** 22.2	258	**76** 20	**95** 25	**130** 1880	**190** 2750	**300** 4350	**594** 5257	**880** 7788	**20.0** 26.8	**517** 4575	**779** 6898
TF 0365 Clutch	**364** 22.2	258	**76** 20	**95** 25	**97** 1400	**152** 2200	**300** 4350	**437** 3871	**740** 6456	**20.0** 26.8	**398** 3521	**650** 5749
TF 0405	**405** 24.7	231	**76** 20	**95** 25	**128** 1850	**172** 2750	**300** 4350	**655** 5800	**916** 8106	**22.1** 29.7	**575** 5091	**789** 6978
TF 0475	**477** 29.1	195	**76** 20	**95** 25	**113** 1645	**138** 2000	**300** 4350	**681** 6027	**851** 7528	**17.4** 23.3	**603** 5334	**740** 6548

Performance data based on testing using 10W40 oil with a viscosity of 43.1 cSt (200 SUS) at 54° C (130° F.) Performance data is typical. Actual data may vary slightly from one production motor to another.

Les donnes sur les performances sont basees sur des tests utilisant de l'huile 10W40 d'une viscosite de 200 SUS a 54°C (130°F). Ces donnees correspondent a des situations typiques. Les donnes reelles peuvent varier legerement d'un moteur de production a l'autre.

Leistungsdaten sind gemessen mit SAE 10W40 bei einer Viskositaet von 43,1 Cst bei 54°C. Geringfuegige Abweichungen von den Katalogdaten sind moeglich.

Datos tecnicos obtenidos con aceite 10W40 de 200 SUS de viscosidad a 54°C (130°F). Los datos proporcionados son valores tipcos. Los valores exactos reales podrian tener una pequena variacion entre distintos motores.

* Intermittent operation rating applies to 10% of every minute.
Intermittierende Werte maximal 10% von jeder Betriebsminute.
Fonctionnement interm. 10% max. de chaque minute d`utilisation.
Capacidad de funcionamiento intermitente valida para 10% por cada minuto.

TF 0080

4.9 cu in / rev

PRESSURE (PSID)

Flow (GPM)	500	1000	1500	2000	2500	3000	3500	4000
.5	256 **19**	546 **14**	835 **8**	1118 **1**				
1	270 **42**	575 **37**	867 **31**	1151 **24**	1434 **17**	1713 **13**	2002 **12**	2289 **13**
2	281 **89**	598 **83**	917 **76**	1233 **68**	1537 **60**	1821 **53**	2090 **46**	2352 **40**
3	282 **135**	601 **128**	922 **121**	1238 **113**	1547 **104**	1845 **96**	2138 **86**	2428 **78**
4	284 **182**	610 **174**	938 **166**	1264 **158**	1586 **149**	1899 **139**	2202 **129**	2491 **120**
5	282 **228**	612 **219**	944 **211**	1278 **202**	1607 **193**	1932 **183**	2250 **172**	2560 **163**
7	274 **321**	607 **311**	945 **301**	1285 **291**	1622 **281**	1957 **270**	2288 **258**	2612 **247**
9	262 **414**	597 **402**	937 **391**	1279 **380**	1622 **369**	1960 **357**	2295 **344**	2628 **331**
12	239 **553**	574 **540**	916 **526**	1260 **514**	1605 **501**	1948 **488**	2287 **472**	2621 **456**
15	215 **693**	546 **677**	886 **661**	1231 **646**	1579 **633**	1927 **619**	2269 **601**	2605 **582**

TORQUE (LB IN) 2605
SPEED (RPM) 582

81 cc / rev

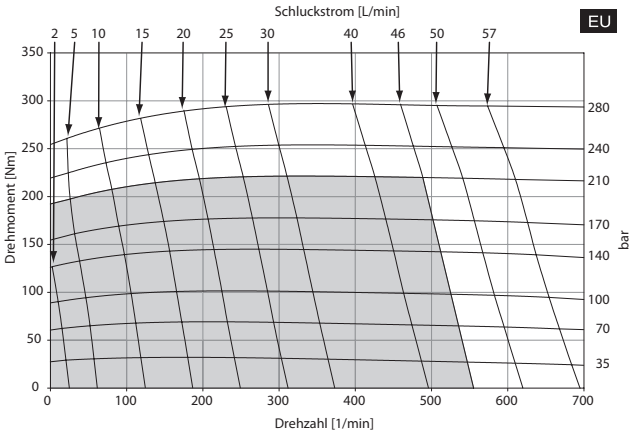

Cont. Int.

Intermittent operation rating applies to 10% of every minute.

Fonctionnement interm. 10% max. de chaque minute d`utilisation.

Performance data based on testing using 10W40 oil with a viscosity of 200 SUS at 54° C (130° F.). Performance data is typical. Actual data may vary slightly from one production motor to another.

Les donnees sur les performances sont basees sur des tests utilisant de l'huile 10W40 d'une viscosite de 200 SUS a 54°C (130°F). Ces donnees correspondent a des situations typiques. Les donnees reelles peuvent varier legerement d'un moteur de production a l'autre.

Intermittierende Werte maximal 10% von jeder Betriebsminute.

Capacidad de funcionamiento intermitente valida para 10% por cada minuto.

Leistugsdaten sind gemessen mit SAE 10W40 bei einer Viskositat von 43,1 Cst beo 54°C. Geringfugige Abweichungen von den Katalogerten sond moglich.

Datos tecnicos obtenidos con aceite 10W40 de 200 SUS de viscosidad a 54°C (130°F). Los datos proporcionados son valores tipcos. Los valores exactos reales podrian tener una pequena variacion entre distintos motores.

TF 0100

6.1 cu in / rev

PRESSURE (PSID)

Flow (GPM)	500	1000	1500	2000	2250	2500	3000	3500
.5	318 **14**	679 **9**	1041 **4**					
1	335 **33**	703 **28**	1066 **22**	1430 **17**	1611 **14**	1791 **12**	2162 **9**	2543 **6**
2	351 **71**	743 **65**	1132 **58**	1514 **52**	1700 **48**	1882 **45**	2241 **39**	2602 **34**
3	350 **109**	746 **102**	1138 **95**	1525 **88**	1717 **84**	1907 **80**	2288 **72**	2671 **64**
4	353 **147**	754 **139**	1156 **132**	1554 **124**	1752 **120**	1948 **116**	2334 **107**	2716 **98**
5	352 **184**	759 **177**	1167 **169**	1572 **161**	1774 **156**	1974 **152**	2370 **143**	2762 **133**
7	343 **260**	753 **252**	1166 **243**	1581 **233**	1788 **229**	1994 **224**	2401 **213**	2810 **202**
9	329 **336**	741 **327**	1159 **316**	1579 **306**	1788 **301**	1997 **296**	2411 **284**	2824 **272**
12	299 **449**	715 **438**	1137 **426**	1561 **415**	1773 **409**	1985 **403**	2406 **391**	2825 **377**
15	259 **562**	679 **549**	1106 **536**	1532 **523**	1746 **517**	1959 **510**	2387 **496**	2813 **480**
20	186 **749**	607 **734**	1034 **718**	1463 **703**	1679 **696**	1896 **689**	2331 **671**	2763 **653**

TORQUE (LB IN) 2763
SPEED (RPM) 653

100 cc / rev

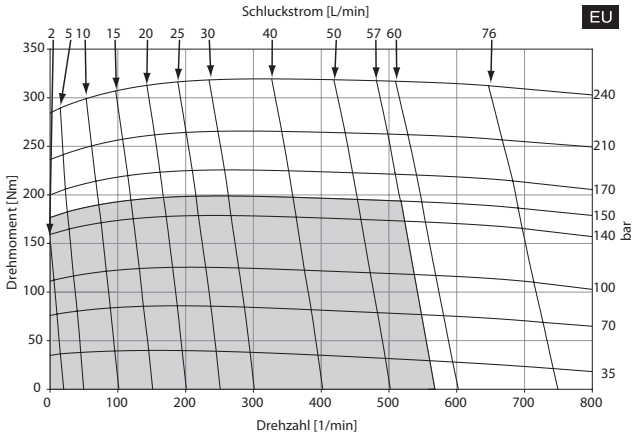

Cont. Int.

Intermittent operation rating applies to 10% of every minute.

Fonctionnement interm. 10% max. de chaque minute d`utilisation.

Performance data based on testing using 10W40 oil with a viscosity of 200 SUS at 54° C (130° F.). Performance data is typical. Actual data may vary slightly from one production motor to another.

Les donnees sur les performances sont basees sur des tests utilisant de l'huile 10W40 d'une viscosite de 200 SUS a 54°C (130°F). Ces donnees correspondent a des situations typiques. Les donnees reelles peuvent varier legerement d'un moteur de production a l'autre.

Intermittierende Werte maximal 10% von jeder Betriebsminute.

Capacidad de funcionamiento intermitente valida para 10% por cada minuto.

Leistugsdaten sind gemessen mit SAE 10W40 bei einer Viskositat von 43,1 Cst beo 54°C. Geringfugige Abweichungen von den Katalogerten sond moglich.

Datos tecnicos obtenidos con aceite 10W40 de 200 SUS de viscosidad a 54°C (130°F). Los datos proporcionados son valores tipcos. Los valores exactos reales podrian tener una pequena variacion entre distintos motores.

TF 0130

7.8 cu in / rev

PRESSURE (PSID)

Flow (GPM)	500	1000	1500	2000	2500	3000
.5	441 **10**	927 **7**	1413 **3**			
1	456 **24**	948 **21**	1440 **17**	1935 **13**	2422 **9**	2909 **5**
2	478 **52**	991 **47**	1495 **42**	2004 **36**	2508 **32**	3009 **29**
3	475 **82**	993 **76**	1510 **70**	2023 **63**	2533 **57**	3042 **52**
4	479 **112**	1006 **105**	1529 **98**	2048 **91**	2568 **85**	3084 **79**
5	478 **141**	1014 **134**	1548 **127**	2076 **119**	2600 **113**	3115 **106**
7	467 **200**	1010 **192**	1553 **184**	2094 **176**	2632 **169**	3166 **161**
9	447 **259**	996 **251**	1546 **242**	2094 **233**	2640 **225**	3184 **216**
12	410 **348**	961 **338**	1518 **328**	2073 **318**	2626 **309**	3177 **299**
15	365 **436**	914 **426**	1474 **415**	2031 **404**	2589 **394**	3148 **382**
20	263 **583**	812 **572**	1371 **559**	1933 **547**	2498 **535**	3059 **522**

TORQUE (LB IN) 3059
SPEED (RPM) 522

128 cc / rev

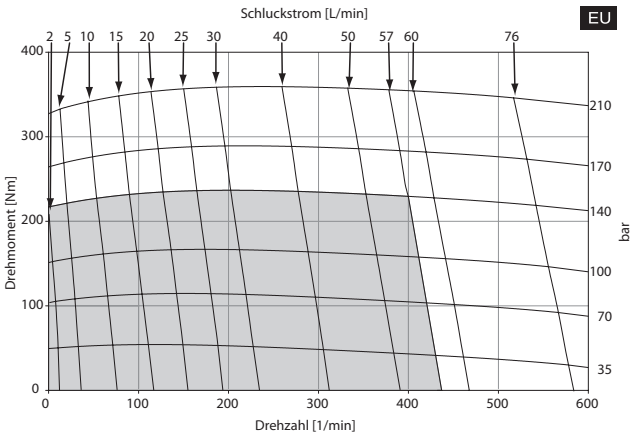

Cont. Int.

Intermittent operation rating applies to 10% of every minute.

Fonctionnement interm. 10% max. de chaque minute d`utilisation.

Performance data based on testing using 10W40 oil with a viscosity of 200 SUS at 54° C (130° F.). Performance data is typical. Actual data may vary slightly from one production motor to another.

Les donnees sur les performances sont basees sur des tests utilisant de l'huile 10W40 d'une viscosite de 200 SUS a 54°C (130°F). Ces donnees correspondent a des situations typiques. Les donnees reelles peuvent varier legerement d'un moteur de production a l'autre.

Intermittierende Werte maximal 10% von jeder Betriebsminute.

Capacidad de funcionamiento intermitente valida para 10% por cada minuto.

Leistugsdaten sind gemessen mit SAE 10W40 bei einer Viskositat von 43,1 Cst beo 54°C. Geringfugige Abweichungen von den Katalogerten sond moglich.

Datos tecnicos obtenidos con aceite 10W40 de 200 SUS de viscosidad a 54°C (130°F). Los datos proporcionados son valores tipcos. Los valores exactos reales podrian tener una pequena variacion entre distintos motores.

TF 0140

8.6 cu in / rev

PRESSURE (PSID)

Flow (GPM)	500	1000	1500	2000	2500	3000
.5	485 **11**	1025 **8**	1560 **4**			
1	507 **24**	1056 **20**	1594 **16**	2137 **12**	2682 **8**	3224 **5**
2	526 **50**	1101 **46**	1670 **42**	2237 **37**	2796 **33**	3336 **28**
3	525 **77**	1103 **72**	1676 **68**	2246 **63**	2814 **57**	3370 **52**
4	528 **103**	1114 **98**	1696 **93**	2277 **88**	2857 **82**	3423 **77**
5	528 **130**	1120 **125**	1712 **119**	2301 **113**	2885 **107**	3456 **101**
7	516 **184**	1115 **177**	1716 **170**	2314 **164**	2908 **158**	3497 **151**
9	496 **237**	1100 **230**	1707 **222**	2311 **215**	2912 **208**	3510 **200**
12	454 **317**	1063 **309**	1677 **300**	2290 **292**	2901 **284**	3506 **275**
15	403 **397**	1011 **388**	1629 **378**	2248 **368**	2866 **359**	3477 **349**
20	298 **530**	908 **520**	1525 **508**	2149 **497**	2775 **485**	3401 **473**

TORQUE (LB IN) 3401
SPEED (RPM) 473

141 cc / rev

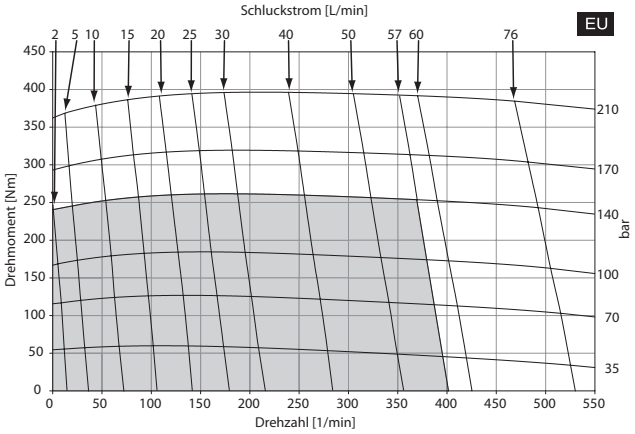

Cont. Int.

Intermittent operation rating applies to 10% of every minute.

Fonctionnement interm. 10% max. de chaque minute d`utilisation.

Performance data based on testing using 10W40 oil with a viscosity of 200 SUS at 54° C (130° F.). Performance data is typical. Actual data may vary slightly from one production motor to another.

Les donnees sur les performances sont basees sur des tests utilisant de l'huile 10W40 d'une viscosite de 200 SUS a 54°C (130°F). Ces donnees correspondent a des situations typiques. Les donnees reelles peuvent varier legerement d'un moteur de production a l'autre.

Intermittierende Werte maximal 10% von jeder Betriebsminute.

Capacidad de funcionamiento intermitente valida para 10% por cada minuto.

Leistugsdaten sind gemessen mit SAE 10W40 bei einer Viskositat von 43,1 Cst beo 54°C. Geringfugige Abweichungen von den Katalogerten sond moglich.

Datos tecnicos obtenidos con aceite 10W40 de 200 SUS de viscosidad a 54°C (130°F). Los datos proporcionados son valores tipcos. Los valores exactos reales podrian tener una pequena variacion entre distintos motores.

TF 0170

10.3 cu in / rev

PRESSURE (PSID)

Flow (GPM)	500	1000	1500	2000	2500	3000
.5	627 **8**	1304 **6**	1980 **2**			
1	657 **19**	1341 **16**	2021 **12**	2714 **9**	3404 **4**	4101 **1**
2	687 **42**	1409 **38**	2123 **34**	2829 **29**	3520 **25**	4197 **21**
3	681 **64**	1407 **60**	2127 **56**	2841 **51**	3552 **45**	4263 **40**
4	681 **86**	1419 **82**	2153 **77**	2879 **72**	3604 **67**	4321 **61**
5	675 **109**	1423 **104**	2165 **99**	2897 **94**	3628 **88**	4355 **82**
7	654 **153**	1406 **148**	2161 **143**	2911 **137**	3652 **130**	4385 **123**
9	624 **198**	1380 **193**	2143 **186**	2900 **180**	3645 **173**	4384 **165**
12	572 **265**	1331 **259**	2101 **252**	2863 **244**	3618 **236**	4364 **228**
15	514 **332**	1267 **325**	2040 **317**	2808 **309**	3570 **300**	4324 **291**
20	387 **444**	1138 **436**	1903 **427**	2667 **417**	3435 **407**	4201 **396**

TORQUE (LB IN) 4201
SPEED (RPM) 396

169 cc / rev

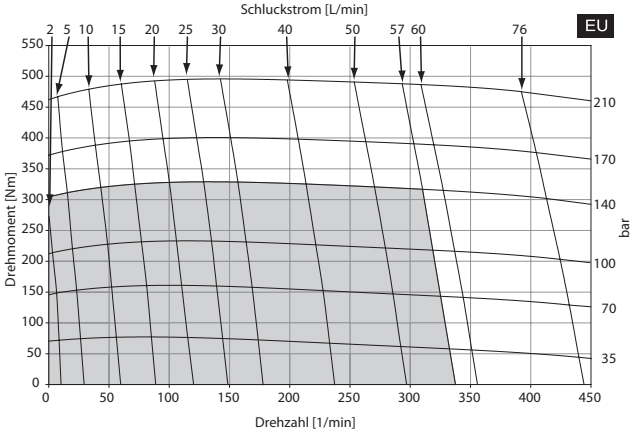

Cont. Int.

Intermittent operation rating applies to 10% of every minute.

Fonctionnement interm. 10% max. de chaque minute d`utilisation.

Performance data based on testing using 10W40 oil with a viscosity of 200 SUS at 54° C (130° F.). Performance data is typical. Actual data may vary slightly from one production motor to another.

Les donnees sur les performances sont basees sur des tests utilisant de l'huile 10W40 d'une viscosite de 200 SUS a 54°C (130°F). Ces donnees correspondent a des situations typiques. Les donnees reelles peuvent varier legerement d'un moteur de production a l'autre.

Intermittierende Werte maximal 10% von jeder Betriebsminute.

Capacidad de funcionamiento intermitente valida para 10% por cada minuto.

Leistugsdaten sind gemessen mit SAE 10W40 bei einer Viskositat von 43,1 Cst beo 54°C. Geringfugige Abweichungen von den Katalogerten sond moglich.

Datos tecnicos obtenidos con aceite 10W40 de 200 SUS de viscosidad a 54°C (130°F). Los datos proporcionados son valores tipcos. Los valores exactos reales podrian tener una pequena variacion entre distintos motores.

TF 0195

12.0 cu in / rev

PRESSURE (PSID)

Flow (GPM)	500	1000	1500	2000	2500	3000
.5	710 **8**	1494 **7**	2286 **5**	3085 **3**		
1	737 **18**	1537 **16**	2334 **14**	3133 **12**	3946 **9**	4767 **7**
2	757 **37**	1587 **35**	2417 **32**	3242 **29**	4067 **26**	4887 **23**
3	758 **56**	1591 **53**	2424 **51**	3254 **47**	4086 **44**	4914 **40**
4	759 **75**	1604 **72**	2450 **69**	3292 **66**	4131 **62**	4965 **58**
5	755 **94**	1610 **91**	2469 **88**	3321 **84**	4163 **80**	5000 **75**
7	737 **132**	1599 **129**	2467 **125**	3329 **120**	4185 **116**	5034 **110**
9	709 **170**	1577 **166**	2451 **162**	3319 **157**	4181 **152**	5034 **146**
12	652 **228**	1523 **223**	2405 **218**	3283 **212**	4154 **206**	5018 **199**
15	586 **285**	1451 **280**	2338 **273**	3222 **267**	4100 **260**	4971 **252**
20	445 **381**	1303 **375**	2174 **367**	3056 **359**	3939 **350**	4822 **341**

TORQUE (LB IN) 4822
SPEED (RPM) 341

197 cc / rev

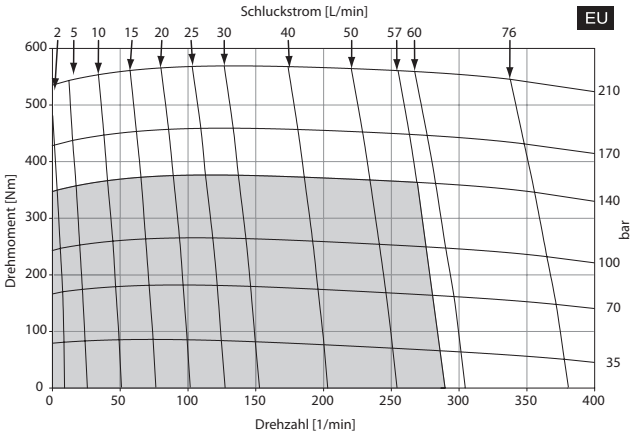

Cont. Int.

Intermittent operation rating applies to 10% of every minute.

Fonctionnement interm. 10% max. de chaque minute d`utilisation.

Performance data based on testing using 10W40 oil with a viscosity of 200 SUS at 54° C (130° F.). Performance data is typical. Actual data may vary slightly from one production motor to another.

Les donnees sur les performances sont basees sur des tests utilisant de l'huile 10W40 d'une viscosite de 200 SUS a 54°C (130°F). Ces donnees correspondent a des situations typiques. Les donnees reelles peuvent varier legerement d'un moteur de production a l'autre.

Intermittierende Werte maximal 10% von jeder Betriebsminute.

Capacidad de funcionamiento intermitente valida para 10% por cada minuto.

Leistugsdaten sind gemessen mit SAE 10W40 bei einer Viskositat von 43,1 Cst beo 54°C. Geringfugige Abweichungen von den Katalogerten sond moglich.

Datos tecnicos obtenidos con aceite 10W40 de 200 SUS de viscosidad a 54°C (130°F). Los datos proporcionados son valores tipcos. Los valores exactos reales podrian tener una pequena variacion entre distintos motores.

TF 0240

14.5 cu in / rev

PRESSURE (PSID)

Flow (GPM)	500	1000	1500	2000	2500	3000
.5	856 **7**	1796 **5**	2758 **3**	3739 **1**		
1	883 **15**	1838 **13**	2801 **11**	3780 **8**	4756 **5**	5741 **3**
2	920 **30**	1912 **28**	2910 **26**	3895 **23**	4880 **20**	5864 **17**
3	919 **46**	1920 **44**	2927 **41**	3931 **38**	4924 **35**	5919 **31**
4	924 **62**	1941 **60**	2958 **57**	3967 **54**	4978 **50**	5985 **45**
5	919 **78**	1948 **75**	2975 **72**	3998 **69**	5017 **64**	6025 **60**
7	904 **109**	1947 **106**	2995 **103**	4036 **99**	5066 **94**	6090 **89**
9	868 **141**	1922 **137**	2982 **134**	4033 **130**	5072 **124**	6101 **119**
12	815 **188**	1866 **184**	2930 **180**	3998 **175**	5053 **169**	6090 **162**
15	726 **235**	1791 **231**	2865 **227**	3934 **221**	5002 **214**	6054 **206**
20	539 **315**	1616 **310**	2699 **304**	3782 **297**	4863 **289**	5928 **280**
25	335 **394**	1404 **389**	2464 **382**	3542 **374**	4634 **365**	5718 **354**

TORQUE (LB IN) 5718
SPEED (RPM) 354

238 cc / rev

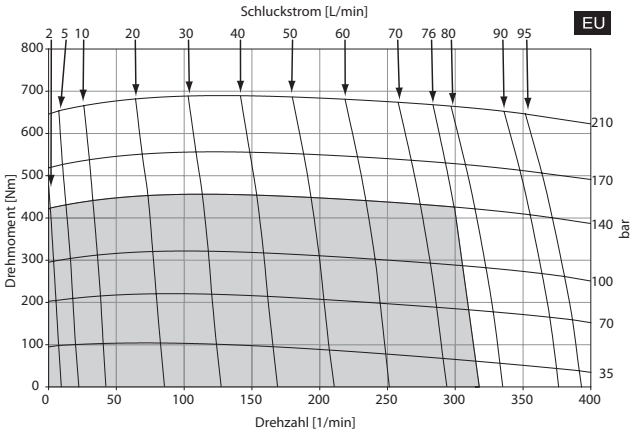

Cont. Int.

Intermittent operation rating applies to 10% of every minute.

Fonctionnement interm. 10% max. de chaque minute d`utilisation.

Performance data based on testing using 10W40 oil with a viscosity of 200 SUS at 54° C (130° F.). Performance data is typical. Actual data may vary slightly from one production motor to another.

Les donnees sur les performances sont basees sur des tests utilisant de l'huile 10W40 d'une viscosite de 200 SUS a 54°C (130°F). Ces donnees correspondent a des situations typiques. Les donnees reelles peuvent varier legerement d'un moteur de production a l'autre.

Intermittierende Werte maximal 10% von jeder Betriebsminute.

Capacidad de funcionamiento intermitente valida para 10% por cada minuto.

Leistugsdaten sind gemessen mit SAE 10W40 bei einer Viskositat von 43,1 Cst beo 54°C. Geringfugige Abweichungen von den Katalogerten sond moglich.

Datos tecnicos obtenidos con aceite 10W40 de 200 SUS de viscosidad a 54°C (130°F). Los datos proporcionados son valores tipcos. Los valores exactos reales podrian tener una pequena variacion entre distintos motores.

TF 0280

17.1 cu in / rev

PRESSURE (PSID)

Flow (GPM)	500	1000	1500	2000	2500	3000
.5	1048 **6**	2180 **5**	3333 **4**	4508 **3**	5704 **2**	
1	1080 **13**	2237 **12**	3399 **11**	4577 **9**	5762 **7**	6925 **5**
2	1120 **26**	2316 **25**	3516 **23**	4726 **22**	5915 **19**	7092 **17**
3	1117 **39**	2320 **38**	3528 **36**	4742 **34**	5949 **32**	7134 **29**
4	1120 **53**	2337 **51**	3559 **49**	4778 **47**	5988 **44**	7187 **41**
5	1109 **66**	2342 **64**	3575 **62**	4802 **60**	6020 **56**	7218 **53**
7	1086 **93**	2331 **91**	3582 **88**	4827 **85**	6058 **81**	7266 **77**
9	1040 **120**	2299 **117**	3562 **114**	4811 **111**	6048 **106**	7264 **102**
12	978 **160**	2226 **157**	3494 **154**	4758 **149**	6001 **144**	7217 **138**
15	888 **200**	2146 **197**	3419 **193**	4688 **188**	5945 **182**	7176 **175**
20	678 **267**	1945 **263**	3223 **258**	4502 **252**	5777 **245**	7029 **236**
25	442 **334**	1686 **330**	2938 **324**	4206 **316**	5487 **308**	6754 **297**

TORQUE (LB IN) 6754
SPEED (RPM) 297

280 cc / rev

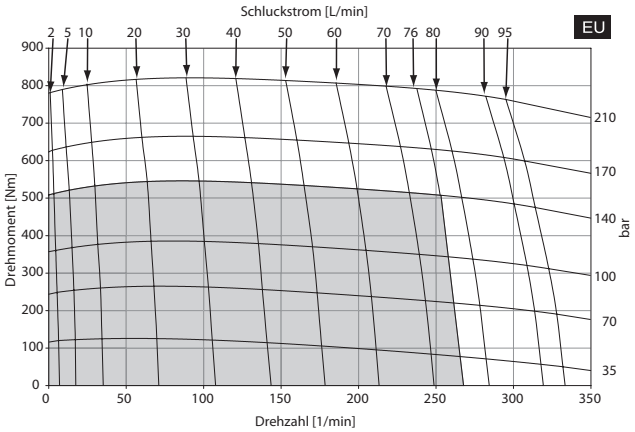

Cont. Int.

Intermittent operation rating applies to 10% of every minute.

Fonctionnement interm. 10% max. de chaque minute d`utilisation.

Performance data based on testing using 10W40 oil with a viscosity of 200 SUS at 54° C (130° F.). Performance data is typical. Actual data may vary slightly from one production motor to another.

Les donnees sur les performances sont basees sur des tests utilisant de l'huile 10W40 d'une viscosite de 200 SUS a 54°C (130°F). Ces donnees correspondent a des situations typiques. Les donnees reelles peuvent varier legerement d'un moteur de production a l'autre.

Intermittierende Werte maximal 10% von jeder Betriebsminute.

Capacidad de funcionamiento intermitente valida para 10% por cada minuto.

Leistugsdaten sind gemessen mit SAE 10W40 bei einer Viskositat von 43,1 Cst beo 54°C. Geringfugige Abweichungen von den Katalogerten sond moglich.

Datos tecnicos obtenidos con aceite 10W40 de 200 SUS de viscosidad a 54°C (130°F). Los datos proporcionados son valores tipcos. Los valores exactos reales podrian tener una pequena variacion entre distintos motores.

TF 0360

22.2 cu in / rev

PRESSURE (PSID)

Flow (GPM)	500	1000	1500	1850	2000	2500	2750
.5	1436 **5**	2955 **4**	4497 **4**	5582 **4**	6047 **3**	7608 **3**	8393 **3**
1	1492 **10**	3042 **9**	4591 **9**	5672 **8**	6136 **8**	7673 **8**	8445 **7**
2	1532 **20**	3114 **19**	4691 **19**	5784 **18**	6249 **18**	7799 **17**	8575 **16**
3	1527 **30**	3114 **29**	4699 **29**	5796 **28**	6263 **27**	7814 **26**	8590 **25**
4	1526 **40**	3125 **40**	4718 **38**	5821 **37**	6290 **37**	7847 **35**	8624 **34**
5	1504 **51**	3114 **50**	4719 **48**	5831 **47**	6304 **46**	7866 **44**	8641 **43**
7	1469 **71**	3090 **70**	4697 **68**	5809 **66**	6282 **66**	7850 **63**	8630 **61**
9	1392 **92**	3017 **90**	4640 **88**	5766 **86**	6243 **85**	7817 **81**	8595 **79**
12	1279 **122**	2902 **120**	4526 **117**	5653 **115**	6133 **113**	7712 **109**	8493 **106**
15	1106 **153**	2739 **151**	4385 **147**	5518 **144**	5999 **142**	7578 **139**	8355 **134**
20	840 **204**	2465 **202**	4115 **197**	5256 **193**	5735 **191**	7329 **184**	8121 **180**
25	516 **255**	2138 **253**	3756 **248**	4876 **243**	5356 **240**	6976 **232**	7785 **226**

TORQUE (LB IN) 7785
SPEED (RPM) 226

364 cc / rev

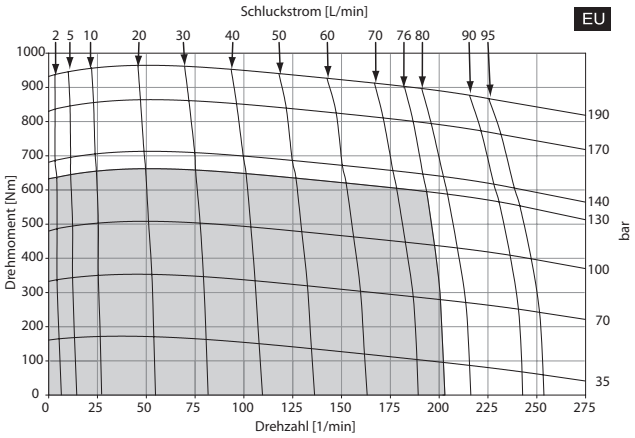

Cont. Int.

Intermittent operation rating applies to 10% of every minute.

Fonctionnement interm. 10% max. de chaque minute d`utilisation.

Performance data based on testing using 10W40 oil with a viscosity of 200 SUS at 54° C (130° F.). Performance data is typical. Actual data may vary slightly from one production motor to another.

Les donnees sur les performances sont basees sur des tests utilisant de l'huile 10W40 d'une viscosite de 200 SUS a 54°C (130°F). Ces donnees correspondent a des situations typiques. Les donnees reelles peuvent varier legerement d'un moteur de production a l'autre.

Intermittierende Werte maximal 10% von jeder Betriebsminute.

Capacidad de funcionamiento intermitente valida para 10% por cada minuto.

Leistugsdaten sind gemessen mit SAE 10W40 bei einer Viskositat von 43,1 Cst beo 54°C. Geringfugige Abweichungen von den Katalogerten sond moglich.

Datos tecnicos obtenidos con aceite 10W40 de 200 SUS de viscosidad a 54°C (130°F). Los datos proporcionados son valores tipcos. Los valores exactos reales podrian tener una pequena variacion entre distintos motores.

TF 0405

24.7 cu in / rev

PRESSURE (PSID)

Flow (GPM)	500	1000	1500	1850	2000	2500
.5	1567 **4**	3212 **4**	4883 **3**	6075 **2**	6587 **2**	8325 **2**
1	1623 **9**	3298 **8**	4972 **7**	6151 **6**	6660 **6**	8371 **5**
2	1662 **18**	3377 **17**	5103 **16**	6306 **14**	6815 **14**	8507 **12**
3	1665 **27**	3392 **26**	5118 **24**	6325 **23**	6839 **22**	8554 **20**
4	1667 **37**	3414 **35**	5155 **33**	6367 **32**	6880 **31**	8591 **28**
5	1652 **46**	3417 **44**	5171 **42**	6393 **40**	6909 **39**	8625 **36**
7	1623 **64**	3399 **62**	5163 **60**	6392 **58**	6912 **56**	8638 **53**
9	1549 **83**	3337 **81**	5125 **78**	6361 **75**	6883 **73**	8605 **69**
12	1432 **111**	3216 **108**	5006 **104**	6252 **101**	6779 **99**	8523 **94**
15	1259 **138**	3059 **136**	4866 **131**	6113 **128**	6644 **126**	8394 **120**
20	936 **185**	2735 **182**	4542 **177**	5800 **172**	6335 **170**	8106 **162**
25	657 **231**	2435 **229**	4187 **222**	5418 **217**	5945 **214**	7709 **205**

TORQUE (LB IN) 7709
SPEED (RPM) 205

405 cc / rev

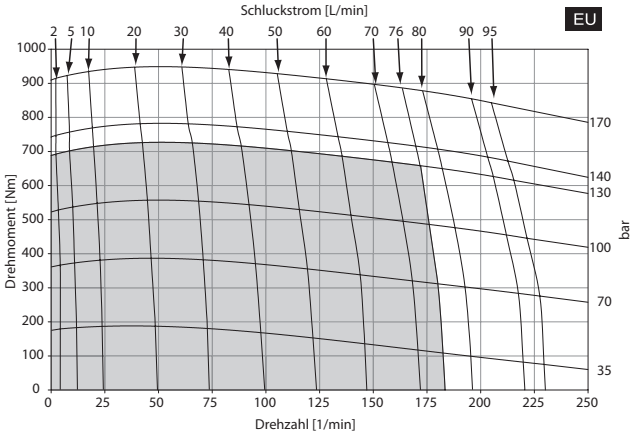

Cont. Int.

Intermittent operation rating applies to 10% of every minute.

Fonctionnement interm. 10% max. de chaque minute d`utilisation.

Performance data based on testing using 10W40 oil with a viscosity of 200 SUS at 54° C (130° F.). Performance data is typical. Actual data may vary slightly from one production motor to another.

Les donnees sur les performances sont basees sur des tests utilisant de l'huile 10W40 d'une viscosite de 200 SUS a 54°C (130°F). Ces donnees correspondent a des situations typiques. Les donnees reelles peuvent varier legerement d'un moteur de production a l'autre.

Intermittierende Werte maximal 10% von jeder Betriebsminute.

Capacidad de funcionamiento intermitente valida para 10% por cada minuto.

Leistugsdaten sind gemessen mit SAE 10W40 bei einer Viskositat von 43,1 Cst beo 54°C. Geringfugige Abweichungen von den Katalogerten sond moglich.

Datos tecnicos obtenidos con aceite 10W40 de 200 SUS de viscosidad a 54°C (130°F). Los datos proporcionados son valores tipcos. Los valores exactos reales podrian tener una pequena variacion entre distintos motores.

TF 0475

29.1 cu in / rev

PRESSURE (PSID)

Flow (GPM)	500	1000	1500	1645	1850	2000
.5	1870 **4**	3857 **3**	5875 **3**	6460 **3**	7292 **2**	7902 **2**
1	1941 **8**	3967 **7**	5992 **7**	6582 **6**	7410 **6**	8016 **6**
2	2003 **15**	4071 **15**	6124 **14**	6717 **14**	7554 **13**	8166 **13**
3	1994 **23**	4072 **23**	6145 **22**	6738 **21**	7578 **20**	8192 **20**
4	1993 **31**	4091 **30**	6177 **29**	6776 **28**	7620 **27**	8235 **27**
5	1964 **39**	4081 **38**	6186 **37**	6790 **36**	7639 **35**	8258 **34**
7	1918 **55**	4048 **54**	6159 **52**	6765 **51**	7620 **50**	8242 **48**
9	1829 **70**	3965 **59**	6098 **67**	6709 **66**	7565 **64**	8189 **63**
12	1694 **94**	3822 **92**	5954 **89**	6575 **89**	7440 **87**	8063 **85**
15	1462 **117**	3617 **116**	5766 **112**	6385 **111**	7254 **109**	7875 **107**
20	1070 **156**	3231 **154**	5394 **151**	6027 **149**	6900 **147**	7530 **145**
25	711 **195**	2820 **194**	4927 **190**	5531 **188**	6391 **185**	7028 **183**

TORQUE (LB IN) 7028
SPEED (RPM) 183

477 cc / rev

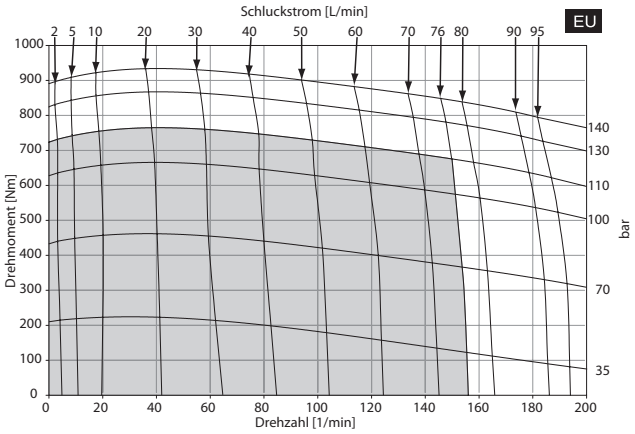

Cont. Int.

Intermittent operation rating applies to 10% of every minute.

Fonctionnement interm. 10% max. de chaque minute d`utilisation.

Performance data based on testing using 10W40 oil with a viscosity of 200 SUS at 54° C (130° F.). Performance data is typical. Actual data may vary slightly from one production motor to another.

Les donnees sur les performances sont basees sur des tests utilisant de l'huile 10W40 d'une viscosite de 200 SUS a 54°C (130°F). Ces donnees correspondent a des situations typiques. Les donnees reelles peuvent varier legerement d'un moteur de production a l'autre.

Intermittierende Werte maximal 10% von jeder Betriebsminute.

Capacidad de funcionamiento intermitente valida para 10% por cada minuto.

Leistugsdaten sind gemessen mit SAE 10W40 bei einer Viskositat von 43,1 Cst beo 54°C. Geringfugige Abweichungen von den Katalogerten sond moglich.

Datos tecnicos obtenidos con aceite 10W40 de 200 SUS de viscosidad a 54°C (130°F). Los datos proporcionados son valores tipcos. Los valores exactos reales podrian tener una pequena variacion entre distintos motores.

TF 0365 Clutch Motor

22.2 cu in / rev

PRESSURE (PSID)

Flow (GPM)	500	1000	1400	1500	2000	2200
.5	1392 **5**	2902 **4**	4131 **3**	4441 **3**	6013 **2**	6653 **2**
1	1439 **10**	2972 **9**	4208 **8**	4518 **8**	6090 **7**	6725 **7**
2	1478 **20**	3061 **19**	4332 **18**	4651 **18**	6248 **17**	6884 **16**
3	1478 **30**	3071 **29**	4349 **29**	4670 **28**	6268 **27**	6906 **26**
4	1480 **41**	3089 **40**	4379 **39**	4703 **38**	6311 **37**	6950 **36**
5	1467 **51**	3096 **50**	4396 **49**	4720 **49**	6332 **47**	6971 **46**
7	1434 **72**	3072 **70**	4384 **69**	4712 **69**	6344 **66**	6990 **65**
9	1378 **92**	3031 **91**	4355 **89**	4686 **89**	6322 **86**	6970 **85**
12	1278 **123**	2922 **122**	4252 **120**	4585 **119**	6242 **116**	6897 **115**
15	1158 **154**	2810 **152**	4139 **150**	4470 **150**	6127 **146**	6787 **144**
20	873 **206**	2531 **204**	3871 **202**	4206 **201**	5878 **197**	6546 **194**
25	557 **258**	2197 **255**	3509 **253**	3839 **252**	5498 **247**	6175 **244**

TORQUE (LB IN) 6175
SPEED (RPM) 244

364 cc / rev

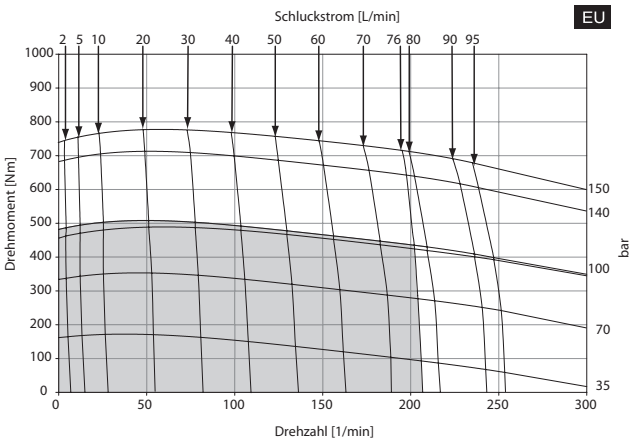

Cont. Int.

Intermittent operation rating applies to 10% of every minute.

Fonctionnement interm. 10% max. de chaque minute d`utilisation.

Performance data based on testing using 10W40 oil with a viscosity of 200 SUS at 54° C (130° F.). Performance data is typical. Actual data may vary slightly from one production motor to another.

Les donnees sur les performances sont basees sur des tests utilisant de l'huile 10W40 d'une viscosite de 200 SUS a 54°C (130°F). Ces donnees correspondent a des situations typiques. Les donnees reelles peuvent varier legerement d'un moteur de production a l'autre.

Intermittierende Werte maximal 10% von jeder Betriebsminute.

Capacidad de funcionamiento intermitente valida para 10% por cada minuto.

Leistugsdaten sind gemessen mit SAE 10W40 bei einer Viskositat von 43,1 Cst beo 54°C. Geringfugige Abweichungen von den Katalogerten sond moglich.

Datos tecnicos obtenidos con aceite 10W40 de 200 SUS de viscosidad a 54°C (130°F). Los datos proporcionados son valores tipcos. Los valores exactos reales podrian tener una pequena variacion entre distintos motores.

Flange Mount / Standardgehäuse
Monture à bride(s) / Montaje de brida

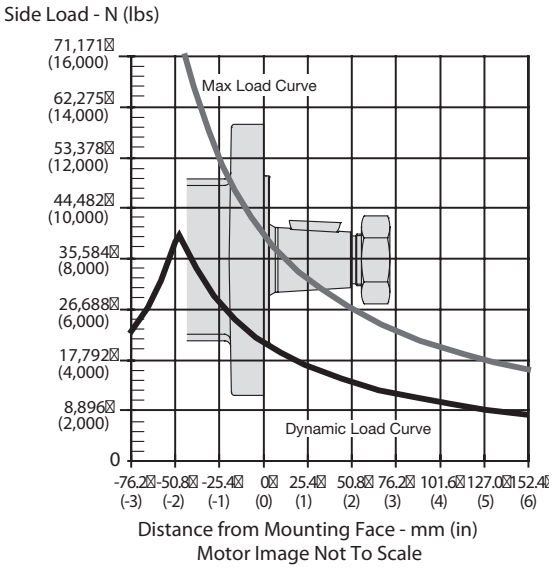

The dynamic side load curve is based on uni-directional steady state loads for L_{10} bearing life at 3 x 10^6 revolutions.
Die zulässige auslegbare radiale Wellenbelastungskurve ist unter ruhenden, einseitig statisch gerichteten Lastverhältnissen auf eine L_{10} Lebensdauer mit 3 x 10^6 Umdrehungen kalkuliert.
La courbe de charge latérale permise se base sur des charges unidirectionnelles en régime permanent pour le roulement L_{10} à 3 x 10^6 révolutions.
La curva de valores admisibles de carga lateral está basada en cargas constantes para cojinetes L_{10} a 3 x 10^6 revoluciones.

Wheel Mount / Radnabengehäuse
Monture à roue / Montaje de rueda

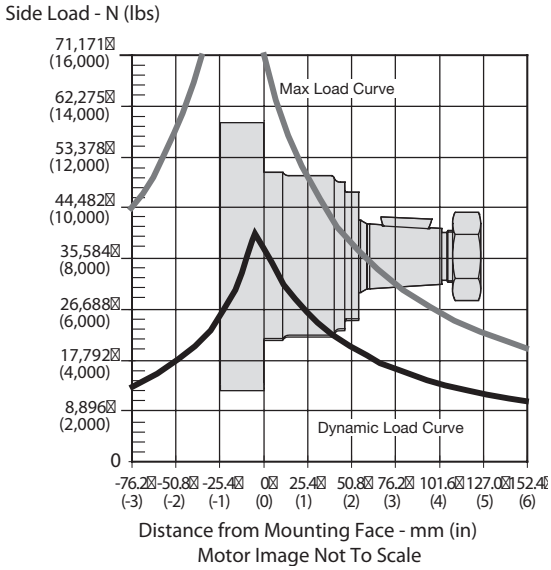

The maximum load curve is defined by bearing static load capacity. This curve should not be exceeded at any time including shock loads.
Die maximale radiale Wellenbelastungskurve ist definiert als maximale statische Last ohne Drehzahl. Sie gilt als Grenze und sollte keinesfalls überschritten werden.
La courbe de charge maximale est définie par la capacité de charge statique portante. Cette courbe ne devrait être dépassée en aucun moment y compris pour les charges par à-coups.
La curva de carga máxima queda definida por la capacidad de carga estática del cojinete. No se deben superar los valores de esta curva, ni siquiera con cargas provisorias de impacto.

Equation to Calculate the Expected Radial Bearing Life
Gleichung zur Ermittlung der Lagerlebensdauer

Equation to calculate the dynamic bearing life for a given load:
Bestimmung der erlaubten radialen Wellenbelastung mit vorgegebener Last

Use F_a, F_b and S in equation to determine hours of L_{10} bearing life.
Die Lebensdauer in Stunden ergibt sich durch einsetzen von F_a, F_b, und S in die nachstehende Formel.

$$L = \frac{3 \times 10^6}{60 \times S} \left\{ \frac{F_a}{F_b} \right\}^{3.33}$$

Where / Mit:

S = Shaft Speed RPM / Abtriebswellendrehzahl in min^{-1}
L = Life In Hours / Lebensdauer in Stunden
F_a = Dynamic side load defined by above curve at a distance from mounting flange. / Erlaubte radiale Wellenbelastung als Function der Laenge
F_b = Application side load. / Anwendungsseitige Wellenbelastung

Note: Calculations are based on L_{10} bearing life per ISO 281.
Auslegung basiert auf einer L_{10} Lenbendauer nach ISO 281.

Code: AH

SAE A 2-Bolt, ISO 6149-1 M22 x 1.5

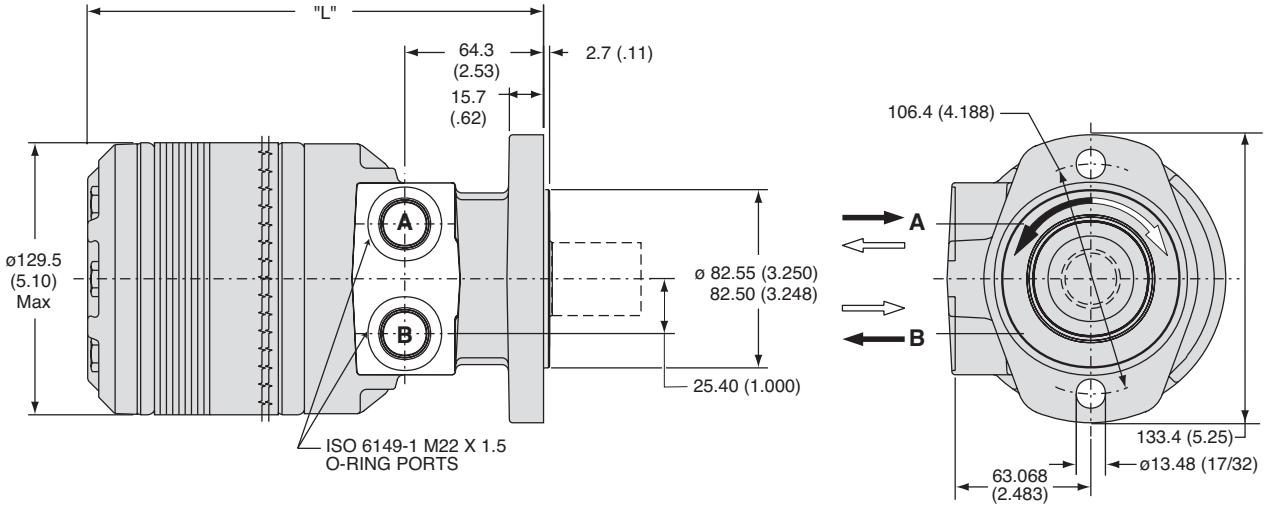

Code AH	disp.	0080	0100	0130	0140	0170	0195	0240	0280	0360	0405	0475
Weight/Gewicht	**kg**	**13.6**	**13.6**	**13.8**	**13.9**	**14.2**	**14.5**	**14.9**	**15.2**	**16.0**	**16.5**	**17.2**
Poids/Peso	(lb)	(29.9)	(30.0)	(30.5)	(30.7)	(31.3)	(31.9)	(32.9)	(33.5)	(35.2)	(36.4)	(37.9)
Length	**"L" mm**	**191**	**191**	**194**	**196**	**199**	**202**	**207**	**211**	**221**	**225**	**234**
	"L" (in)	(7.51)	(7.51)	(7.63)	(7.70)	(7.82)	(7.95)	(8.13)	(8.32)	(8.70)	(8.87)	(9.20)

Code: AM

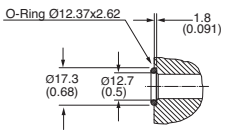

Motor with manifold mount is supplied with 2 o-rings.
Zum Motor mit Universalanschluß werden 2 o-ringe geliefert.
Deux joints toriques sont livrés avec les moteurs a plan de raccordement universel.
Il blocchetto connessioni é corredato da 2 OR.

SAE A 2-Bolt, Manifold

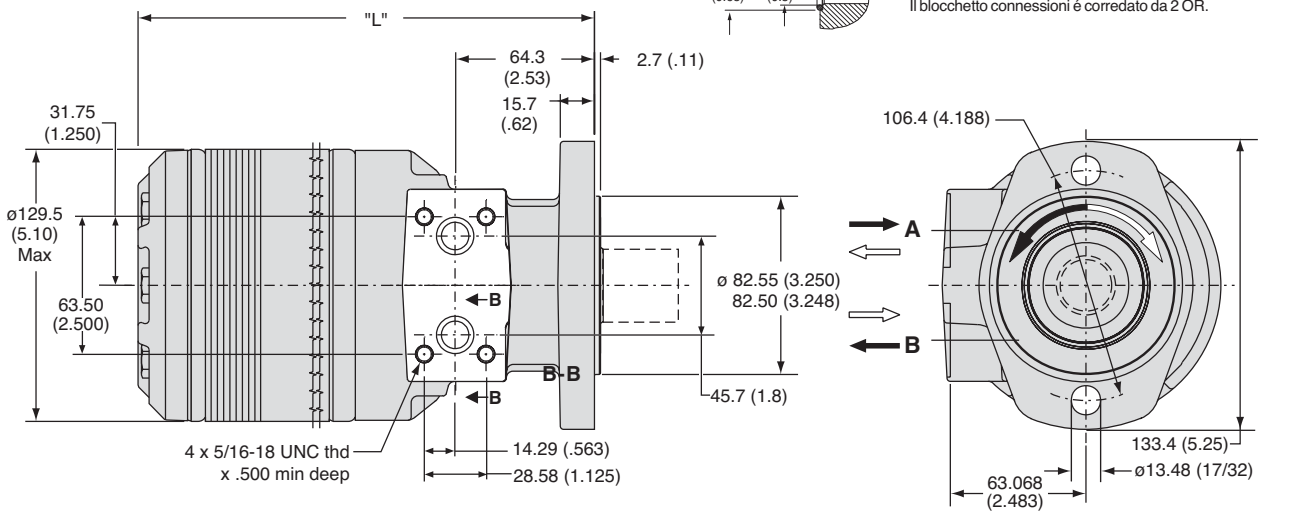

Code AM	disp.	0080	0100	0130	0140	0170	0195	0240	0280	0360	0405	0475
Weight/Gewicht	**kg**	**13.6**	**13.6**	**13.8**	**13.9**	**14.2**	**14.5**	**14.9**	**15.2**	**16.0**	**16.5**	**17.2**
Poids/Peso	(lb)	(29.9)	(30.0)	(30.5)	(30.7)	(31.3)	(31.9)	(32.9)	(33.5)	(35.2)	(36.4)	(37.9)
Length	**"L" mm**	**191**	**191**	**194**	**196**	**199**	**202**	**207**	**211**	**221**	**225**	**234**
	"L" (in)	(7.51)	(7.51)	(7.63)	(7.70)	(7.82)	(7.95)	(8.13)	(8.32)	(8.70)	(8.87)	(9.20)

English equivalents for metric specifications are shown in ( ).

Code: AS

SAE A 2-Bolt, 7/8-14 SAE O-Ring

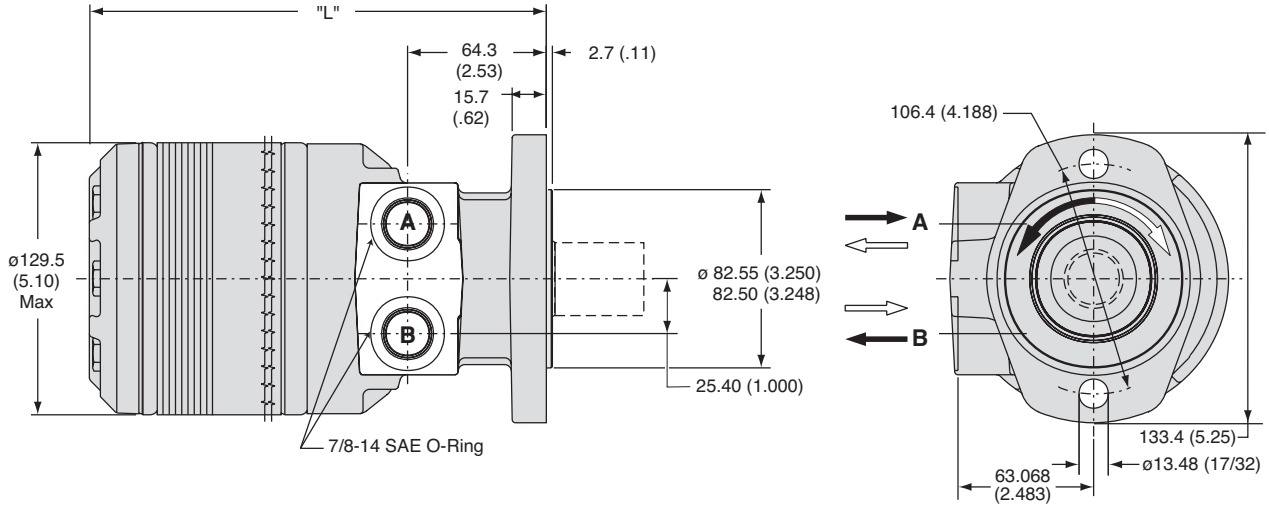

Code AS	disp.	0080	0100	0130	0140	0170	0195	0240	0280	0360	0405	0475
Weight/Gewicht	**kg**	**13.6**	**13.6**	**13.8**	**13.9**	**14.2**	**14.5**	**14.9**	**15.2**	**16.0**	**16.5**	**17.2**
Poids/Peso	(lb)	(29.9)	(30.0)	(30.5)	(30.7)	(31.3)	(31.9)	(32.9)	(33.5)	(35.2)	(36.4)	(37.9)
Length	**"L" mm**	**191**	**191**	**194**	**196**	**199**	**202**	**207**	**211**	**221**	**225**	**234**
	"L" (in)	(7.51)	(7.51)	(7.63)	(7.70)	(7.82)	(7.95)	(8.13)	(8.32)	(8.70)	(8.87)	(9.20)

Code: BS

SAE B 2-Bolt, 7/8-14 SAE O-Ring

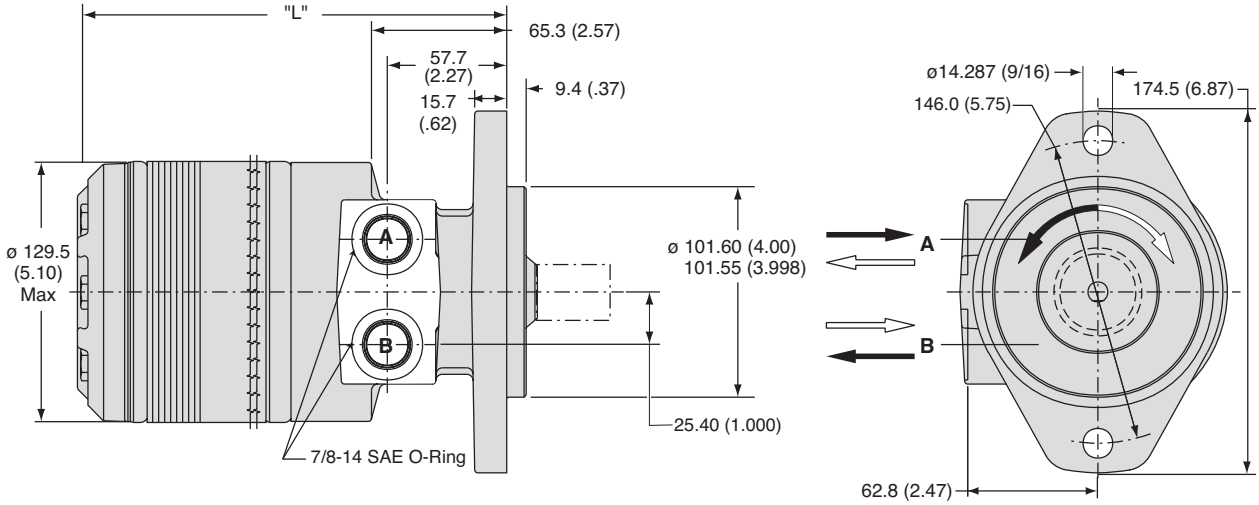

Code BS	disp.	0080	0100	0130	0140	0170	0195	0240	0280	0360	0405	0475
Weight/Gewicht	**kg**	**14.2**	**14.2**	**14.5**	**14.6**	**14.8**	**15.1**	**15.5**	**15.8**	**16.6**	**17.1**	**17.8**
Poids/Peso	(lb)	(31.3)	(31.4)	(31.9)	(32.1)	(32.7)	(33.3)	(34.3)	(34.9)	(36.6)	(37.8)	(39.3)
Length	**"L" mm**	**184**	**184**	**187**	**189**	**192**	**195**	**200**	**205**	**214**	**218**	**227**
	"L" (in)	(7.25)	(7.25)	(7.37)	(7.44)	(7.56)	(7.69)	(7.87)	(8.06)	(8.44)	(8.60)	(8.94)

English equivalents for metric specifications are shown in ( ).

Code: LS

Wheel, Front Brake Nose

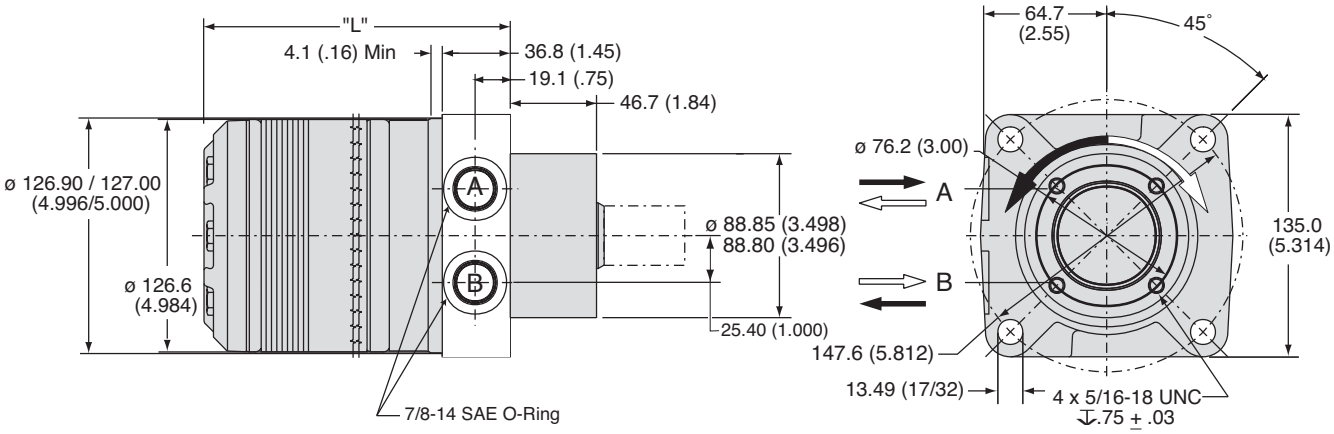

Code LS	disp.	0080	0100	0130	0140	0170	0195	0240	0280	0360	0405	0475
Weight/Gewicht	**kg**	**14.0**	**14.0**	**14.2**	**14.3**	**14.6**	**14.9**	**15.3**	**15.6**	**16.3**	**17.0**	**17.5**
Poids/Peso	(lb)	(30.9)	(30.9)	(31.2)	(31.5)	(32.1)	(32.9)	(33.7)	(34.4)	(35.9)	(37.5)	(38.6)
Length	**"L" mm**	**146**	**146**	**149**	**151**	**154**	**157**	**162**	**167**	**175**	**180**	**189**
	"L" (in)	(5.73)	(5.73)	(5.85)	(5.92)	(6.04)	(6.17)	(6.35)	(6.54)	(6.92)	(7.08)	(7.42)

Code: MS

Magneto, 7/8-14 SAE O-Ring

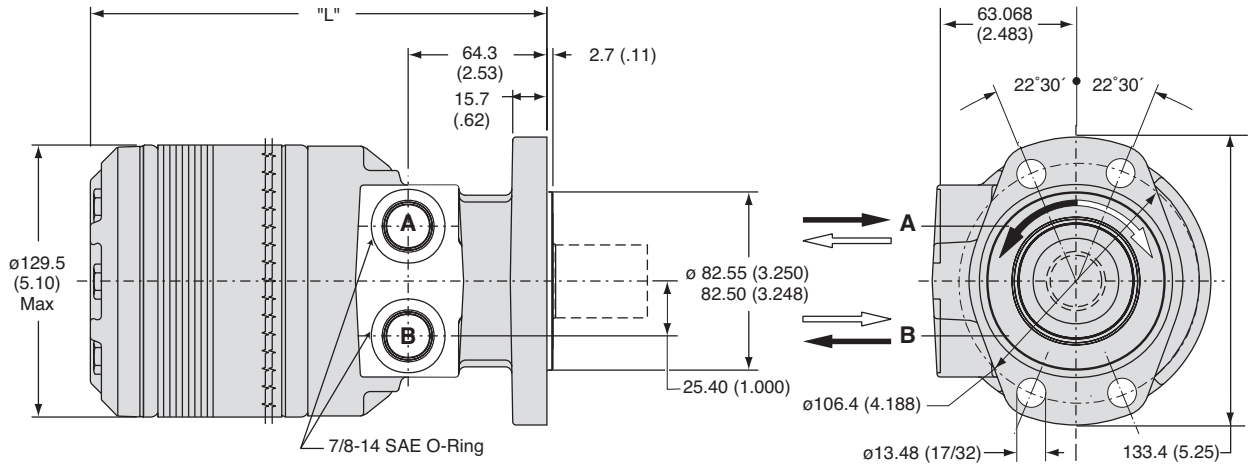

Code MS	disp.	0080	0100	0130	0140	0170	0195	0240	0280	0360	0405	0475
Weight/Gewicht	**kg**	**13.6**	**13.6**	**13.8**	**13.9**	**14.2**	**14.5**	**14.9**	**15.2**	**16.0**	**16.5**	**17.2**
Poids/Peso	(lb)	(29.9)	(30.0)	(30.5)	(30.7)	(31.3)	(31.9)	(32.9)	(33.5)	(35.2)	(36.4)	(37.9)
Length	**"L" mm**	**191**	**191**	**194**	**196**	**199**	**202**	**207**	**211**	**221**	**225**	**234**
	"L" (in)	(7.51)	(7.51)	(7.63)	(7.70)	(7.82)	(7.95)	(8.13)	(8.32)	(8.70)	(8.87)	(9.20)

English equivalents for metric specifications are shown in ( ).

008 TF.indd, js

Parker Hannifin Corporation
Hydraulic Pump/Motor Division
Greeneville, Tennessee, USA

Code: US

Wheel, Standard, 7/8-14 SAE O-Ring

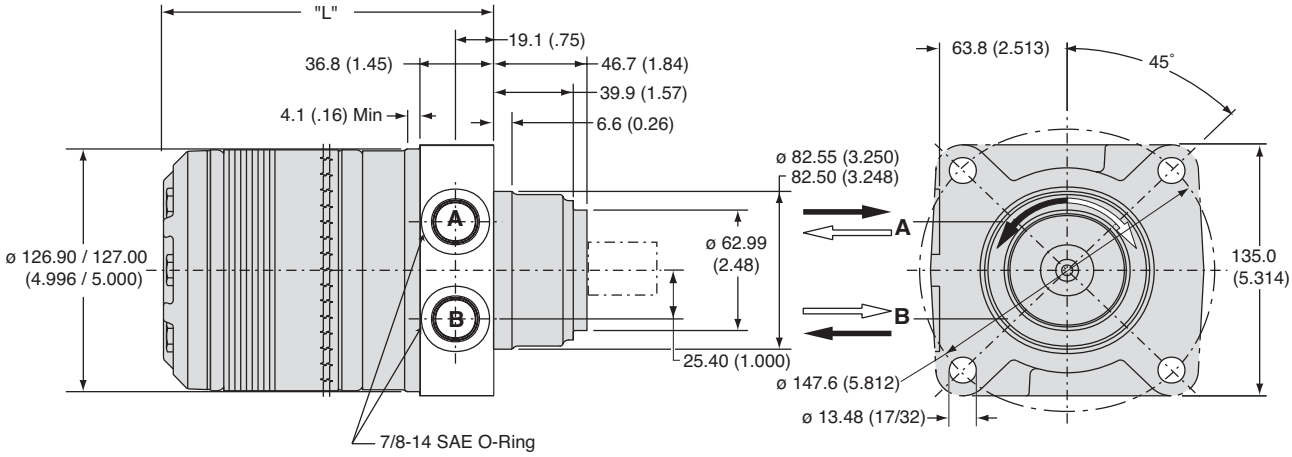

Code US	disp.	0080	0100	0130	0140	0170	0195	0240	0280	0360	0405	0475
Weight/Gewicht	**kg**	**13.9**	**13.9**	**14.2**	**14.3**	**14.5**	**14.8**	**15.2**	**15.5**	**16.3**	**16.9**	**17.5**
Poids/Peso	(lb)	(30.6)	(30.7)	(31.2)	(31.5)	(32.0)	(32.7)	(33.6)	(34.2)	(35.9)	(37.2)	(38.6)
Length	**"L" mm**	**146**	**146**	**149**	**151**	**154**	**157**	**162**	**167**	**176**	**180**	**189**
	"L" (in)	(5.73)	(5.73)	(5.85)	(5.92)	(6.04)	(6.17)	(6.35)	(6.54)	(6.92)	(7.08)	(7.42)

English equivalents for metric specifications are shown in ( ).

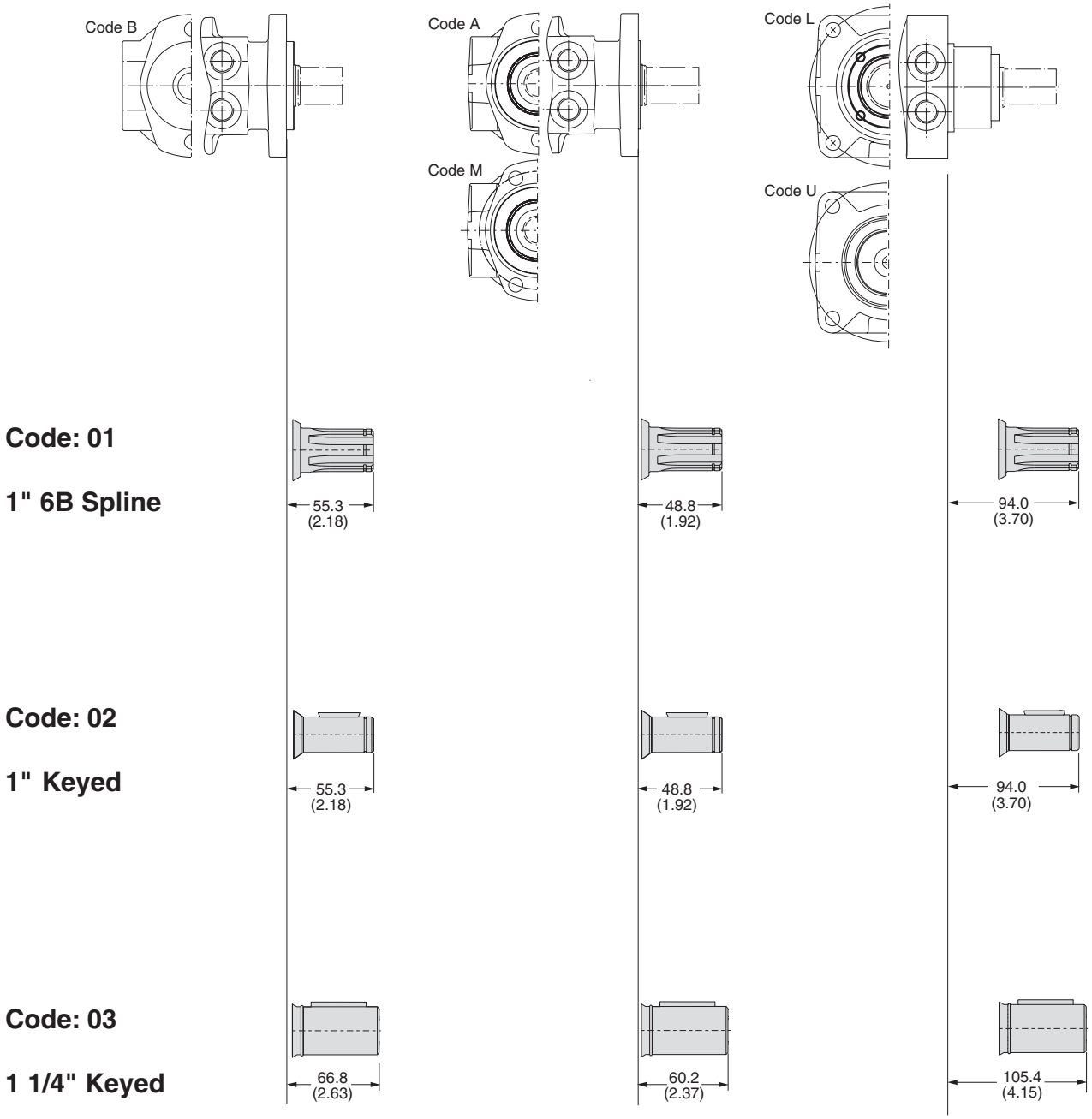

English equivalents for metric specifications are shown in ( ).

Code: 01

1" 6B Spline

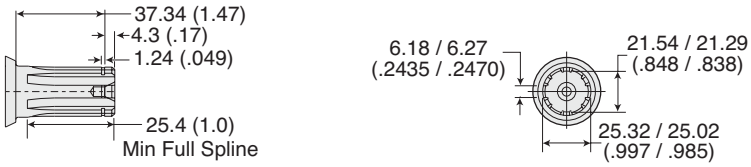

Code: 02

1" Keyed

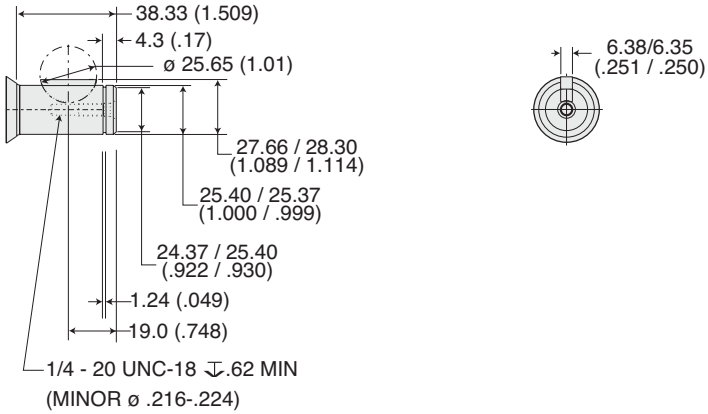

Code: 03

1 1/4" Keyed

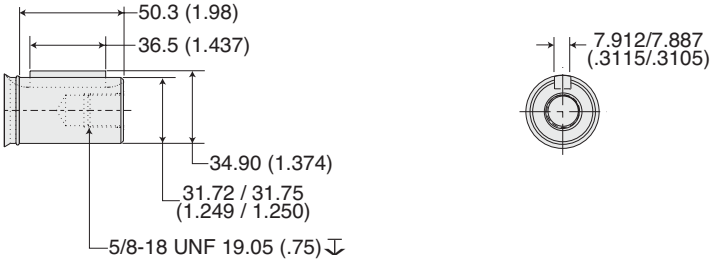

English equivalents for metric specifications are shown in ( ).

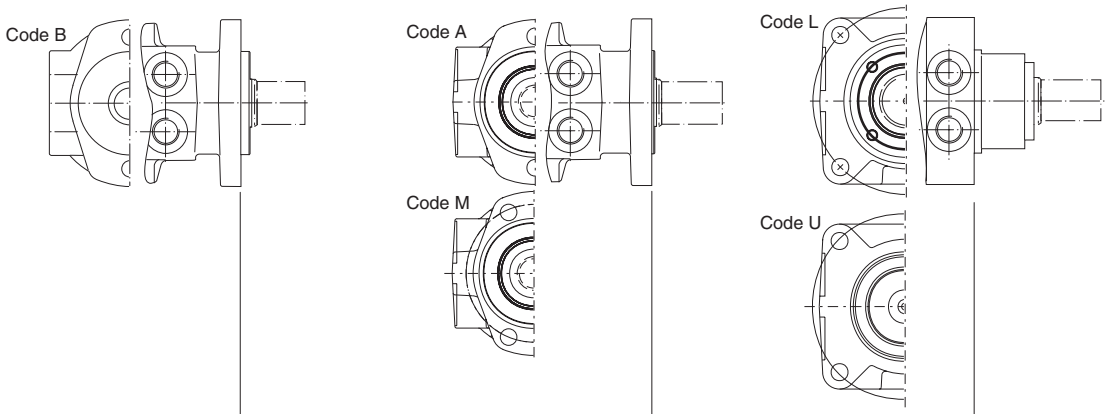

Code: 05

1 1/4" 14 Tooth Spline

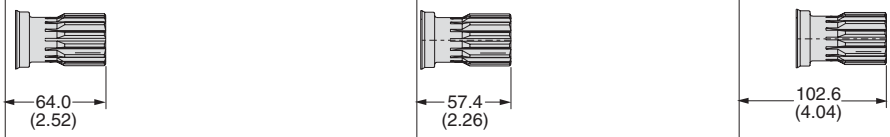

Code: 06

19 Tooth Spline

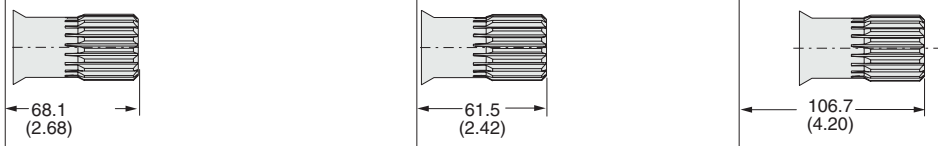

Code: 07

15 Tooth Spline

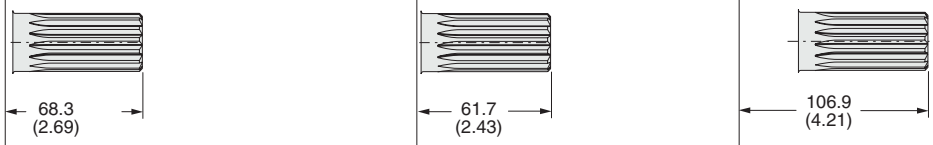

Code: 08

1 1/4" Tapered

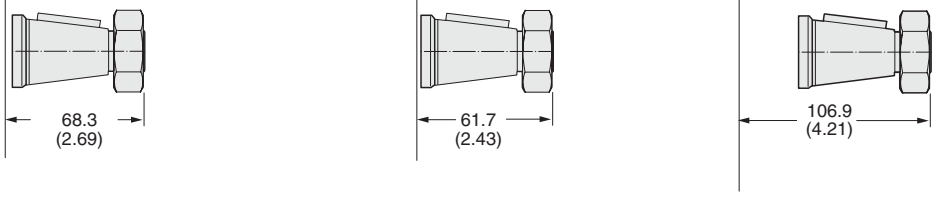

English equivalents for metric specifications are shown in ( ).

008 TF.indd, js

Code: 05

1 1/4" 14 Tooth Spline

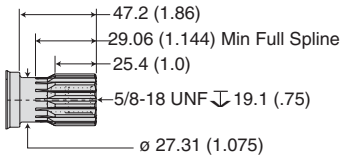

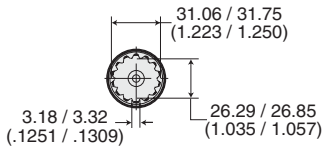

Code: 06

19 Tooth Spline

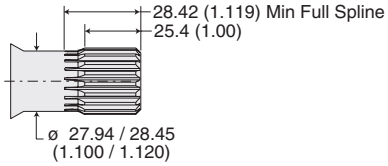

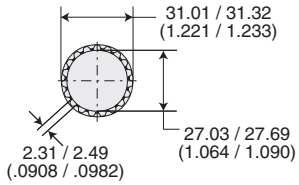

Code: 07

15 Tooth Spline

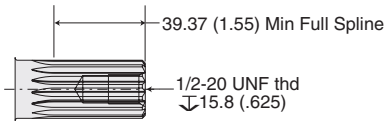

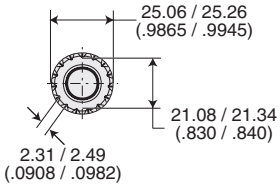

Code: 08

1 1/4" Tapered

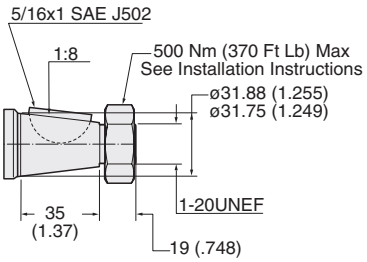

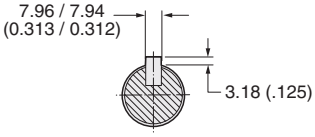

English equivalents for metric specifications are shown in ( ).

9 Displacements **9 Schluckvolumen** **9 Cylindrée** **9 Despazamientos**	(4.9 - 22.2 in³/rev) **81 . . . 364 cm³/rev**	
	Cont.	**Int.**
Maximum Pressure **Eingangsdruck** **Pression entrée** **Presion Maxima**	(3000 psid) **. . . 207 bar**	(4000 psid) **. . . 276 bar**
Maximum Oil Flow **Schluckstrom** **Débit d'huile** **Caudal Maximo de Aceite**	(25 gpm) **. . .95 lpm**	
Maximum Speed **Drehzahl** **Vitesse de rotation** **Velocidad Maxima**	(749 rpm) **749 rpm**	
	Cont.	**Int.**
Maximum Torque **MaxDrehmoment** **Couple** **Torque Maximo**	(4502 lb in) **509 Nm**	(7029 lb in) **794 Nm**

The Clutch Motor consists of a TF Series motor separated from the output shaft by a face spline coupling. The coupling is held apart by springs, disconnecting the motor from the output shaft, allowing the output shaft to freewheel. When hydraulic pressure is applied to either motor port, the springs separating the coupling are overcome and the motor is coupled to the output shaft.

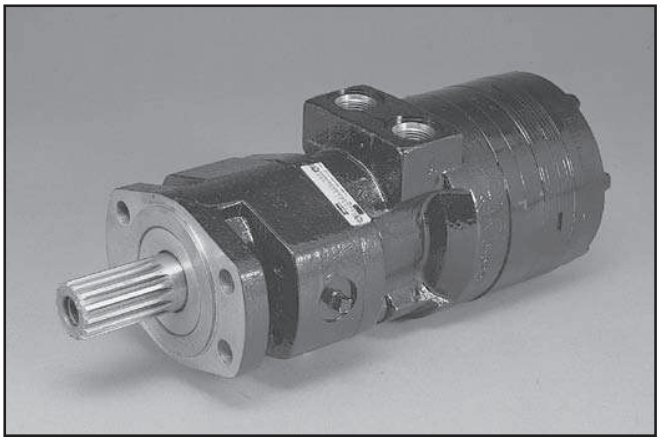

Notes:

1) It is not recommended to engage the clutch while the output shaft is rotating.
2) Clutch may not disengage if there is residual torque on output shaft when pressure is lost at motor ports.
3) Minimum pressure to engage clutch - 200 PSI.
4) To assure clutch disengagement, pressure at motor ports must be below 60 PSI.
5) Shaft will freewheel when pressure is lost at motor ports whether by design or inadvertently. The possibility of unplanned freewheeling should be considered in the design of the system.
6) If applicable, contact factory for radial load capacity.

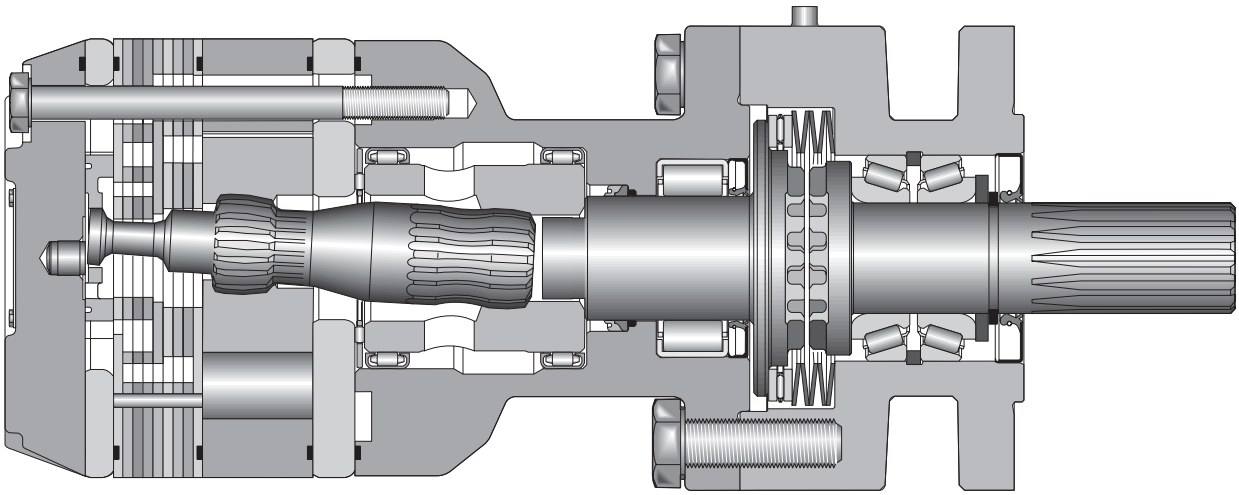

TF	XXXX	GS	XX	0	XXXX
Series	Displacement Schluckvolumen Cylindrée Desplazamiento	Mounting/Ports Gehäuse/Anschluß Carter/Plan de raccordement Montaje/Lumbreras	Shaft Welle Arbre Eje	Rotation Drehrichtung Direction de rotation Rotacion	Options Opciones

Code	cm³/tr cm³/giro cm³/U	in³/rev
0080	81	4.9
0100	100	6.1
0130	128	7.8
0140	141	8.6
0170	169	10.3
0195	197	12.0
0240	238	14.5
0280	280	17.1
0365	364	22.2

Code	Mounting/Ports
GS	Magneto/7/8-14 SAE

Code	Shaft
03	1 1/4" Keyed
05	1 1/4" 14 Tooth Spline

Code	Rotation
0	Standard
1	Reverse Timed Manifold

Code	Options
AAAB	No Paint No lackiert
AAAA	Black Paint Schwarz lackiert

For other available options, see pages 257–258.

Code: GS

4 Bolt Magneto, Clutch / 7/8-14 SAE

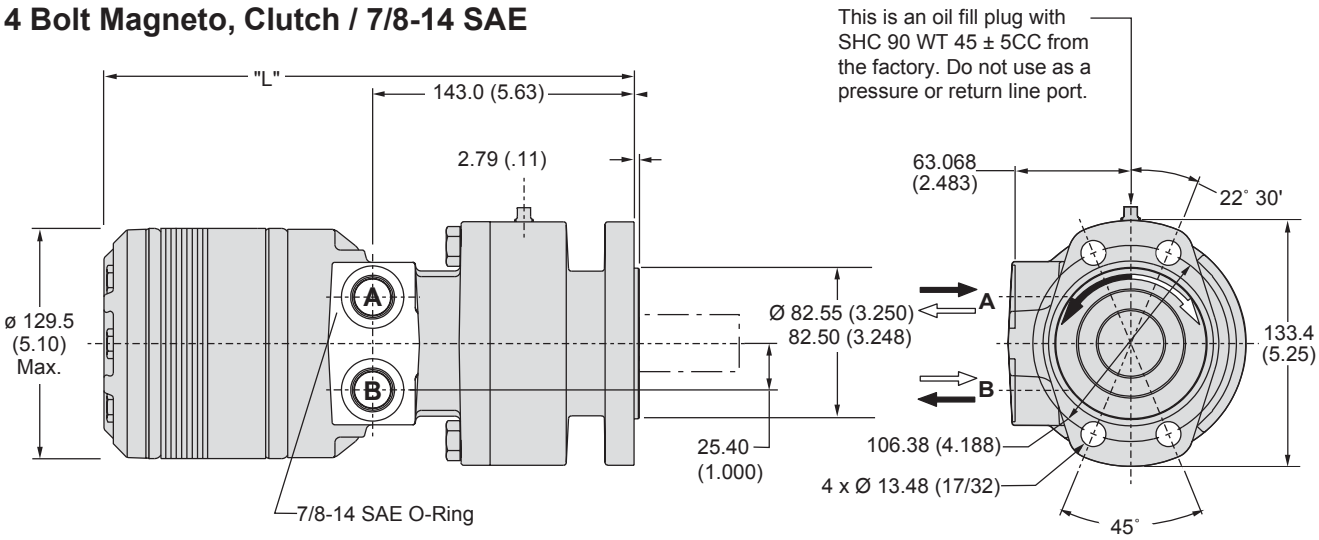

Code GS	disp.	0080	0100	0130	0140	0170	0195	0240	0280	0365
Weight/Gewicht	**kg**	**17.9**	**17.9**	**18.1**	**18.2**	**18.5**	**18.8**	**19.2**	**19.5**	**20.3**
Poids/Peso	(lb)	(39.3)	(39.4)	(39.9)	(40.1)	(40.7)	(41.3)	(42.3)	(42.9)	(44.6)
Length	**"L" mm**	**270**	**270**	**273**	**275**	**278**	**281**	**286**	**290**	**300**
	"L" (in)	(10.61)	(10.61)	(10.73)	(10.80)	(10.92)	(11.05)	(11.23)	(11.42)	(11.80)

For performance data curves, see TF section.

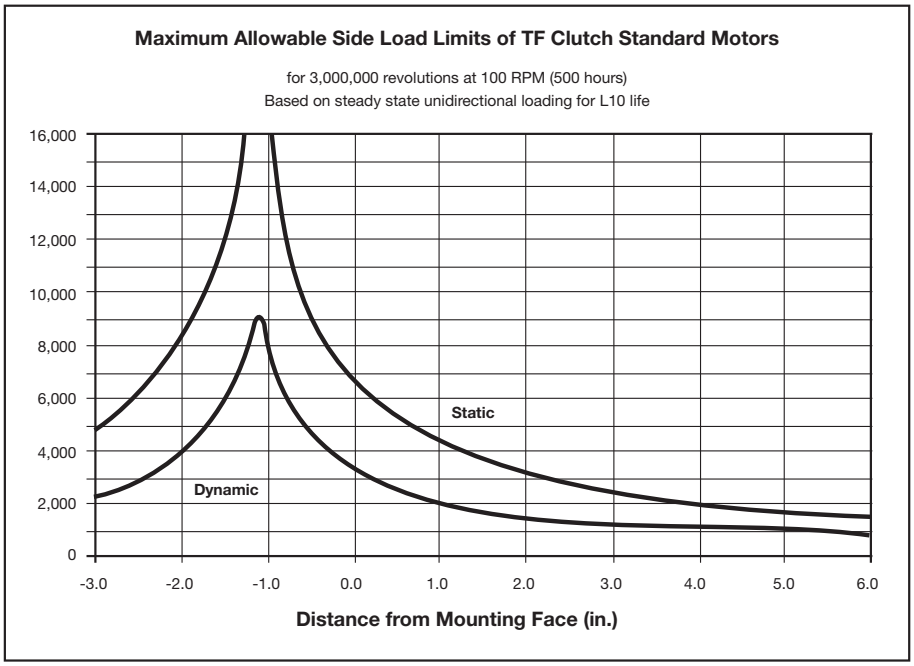

English equivalents for metric specifications are shown in ( ).

009 TF Clutch.indd, js

Parker Hannifin Corporation
Hydraulic Pump/Motor Division
Greeneville, Tennessee, USA

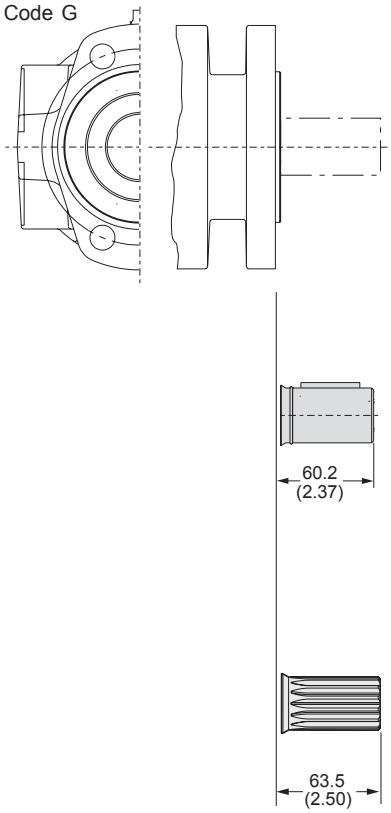

Code: 03

1 1/4" Keyed

Code: 05

1 1/4" 14 Tooth Spline

Code: 03

1 1/4" Keyed

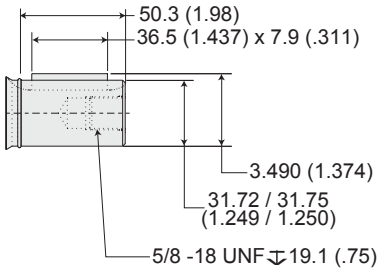

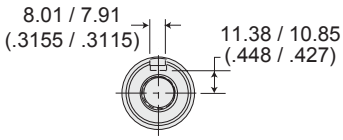

Code: 05

1 1/4"14 Tooth Spline

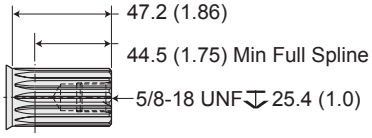

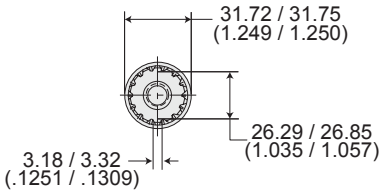

English equivalents for metric specifications are shown in ( ).

11 Displacements **11 Schluckvolumen** **11 Cylindrée** **11 Despazamientos**		(4.9 - 29.1 in³/rev) **81 . . . 477 cm³/rev**
	Cont.	**Int.**
Maximum Pressure **Eingangsdruck** **Pression entrée** **Presion Maxima**	(3000 psid) **. . . 207 bar**	(4000 psid) **. . . 276 bar**
Maximum Oil Flow **Schluckstrom** **Débit d'huile** **Caudal Maximo de Aceite**		(25 gpm) **. . . 95 lpm**
Maximum Speed **Drehzahl** **Vitesse de rotation** **Velocidad Maxima**		**(749 rpm)** **749 rpm**
	Cont.	**Int.**
Maximum Torque **MaxDrehmoment** **Couple** **Torque Maximo**	(6027 lb in) **681 Nm**	(8106 lb in) **916 Nm**
Maximum Side Load at Key **Seitenlast** **Charges latèrales** **Carga Maxima Lateral**		(3597 lb) **. . . 16000 N**

Holding capacity is 497 Nm (4,400 in lbs) with 68 Nm (600 in lbs) of input torque at lever pivot. Brake capacities are typical for non-burnished brake shoe. OEM testing required to verify actual field conditions.

Das maximale Bremsmoment von 497 Nm (4400 in lbs) wird erreicht durch Betätigung des Bremshebels mit 68 Nm (600 in lbs).
Genannte Einsatzdaten beziehen sich auf Neuprodukte.
Die Eignung der Geräte ist vom Anwender für den jeweiligen Einsatz individuell zu prüfen .

La puissance de maintien est de 497 Nm (4400 pouces-livres) avec couple d'entrée au pivot du levier de 68 Nm (600 pouces-livres). Les puissances de freinage sont typiques pour des sabots de frein non brunis. Les essais imposés par le constructeur d'origine exigent la vérification des conditions réelles sur place.

Capacidad de retención de 497 N-m (4.400 libras-pulgada) con 69 N-m (600 libras-pulgada) de torque de entrada en el brazo de articulación. Los valores de capacidad de frenado son típicas para zapatas de freno no bruñidas. Para fabricantes de equipos originales se deben efectuar pruebas bajo condiciones reales de funcionamiento.

A Mechanical Brake Motor for Tough Applications

Parker's latest DF Series motor is truly another innovation the market has been waiting for. The compact size, reliable holding capability and ease of installation makes this new mechanical parking brake motor the perfect choice for many turf or agricultural applications using hydraulics for wheel motors. This mechanically applied version of the brake motor is available in 11 motor displacements 80 cm³/rev (4.9 in³/rev) to 475 cm³/rev (29.1 in³/rev). Pressure capacities are up to 280 bar (4,000 psi) intermittent and 210 bar (3,000 psi) continuous. Flows up to 95 lpm (25 gpm) and speed up to 749 rpm are available. Motor output torque up to 916 Nm (8,106 lb in) intermittent and 681 Nm (6,027 lb in) continuous is available.

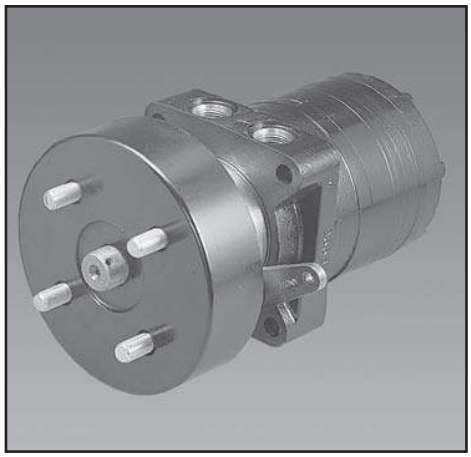

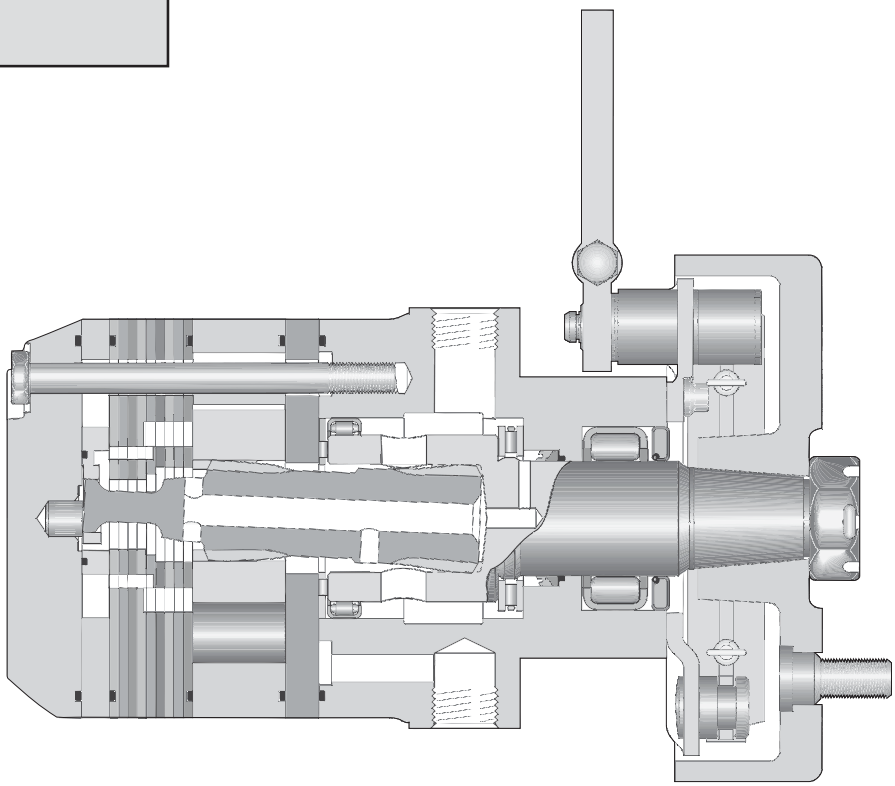

010 DF.indd, js

Parker Hannifin Corporation
Hydraulic Pump/Motor Division
Greeneville, Tennessee, USA

DF	XXXX	XS	X	8	0	XXXX
Series	Displacement Schluckvolumen Cylindrée Desplazamiento	Mounting/Ports Gehäuse/Anschluß Carter/Plan de raccordement Montaje/Lumbreras	Drum Type Trommelbremse Tipo de tambor Genre de tambour	Shaft Welle Arbre Eje	Rotation Drehrichtung Direction de rotation Rotacion	Options Opciones

Code	cm³/U cm³/tr cm³/giro in³/rev
0080	81 / 4.9
0100	100 / 6.1
0130	128 / 7.8
0140	141 / 8.6
0170	169 / 10.3
0195	197 / 11.9
0240	238 / 14.5
0280	280 / 17.1
0360	364 / 22.2
0405	405 / 24.7
0475	477 / 29.1

Code	Front Port Rotation
0	Standard
1	Reverse Timed Manifold

Code	Mounting/Ports
AS	Wheel Mt. w/Brake Lever @ 105 °/ 7/8-14 SAE 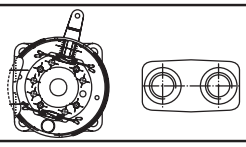
BS	Wheel Mt. w/Brake Lever @ 165 °/ 7/8-14 SAE
CS	Wheel Mt. w/Brake Lever @ 195 °/ 7/8-14 SAE
DS	Wheel Mt. w/Brake Lever @ 255 °/ 7/8-14 SAE
ES	Wheel Mt. w/Brake Lever @ 285 °/ 7/8-14 SAE
FS	Wheel Mt. w/Brake Lever @ 345 °/ 7/8-14 SAE
GS	Wheel Mt. w/Brake Lever @ 15 °/ 7/8-14 SAE
HS	Wheel Mt. w/Brake Lever @ 75 °/ 7/8-14 SAE

Code	Description
AAAB	No Paint No lackiert
AAAA	Black Paint Schwarz lackiert

Code	Drum Type
A	4 Bolt
B	5 Bolt

Code	Shaft	Avail.
8	1 1/4" Tapered	

For other available options, see pages 257–258.

Wheel Mount/Radnabengehäuse
Monture à roue/ Montaje de rueda

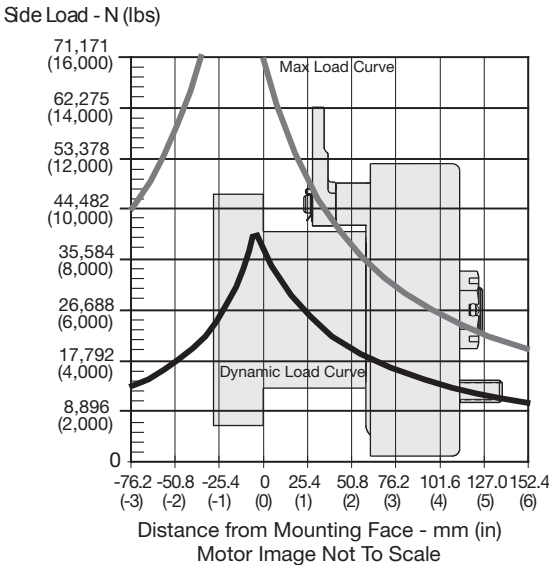

The dynamic side load curve is based on uni-directional steady state loads for L_{10} bearing life at 3 x 10^6 revolutions.
Die zulässige auslegbare radiale Wellenbelastungskurve ist unter ruhenden, einseitig statisch gerichteten Lastverhältnissen auf eine L_{10} Lebensdauer mit 3 x 10^6 Umdrehungen kalkuliert.
La courbe de charge latérale permise se base sur des charges unidirectionnelles en régime permanent pour le roulement L_{10} à 3 x 10^6 révolutions.
La curva de valores admisibles de carga lateral está basada en cargas constantes para cojinetes L_{10} a 3 x 10^6 revoluciones.

The maximum load curve is defined by bearing static load capacity. This curve should not be exceeded at any time including shock loads.
Die maximale radiale Wellenbelastungskurve ist definiert als maximale statische Last ohne Drehzahl. Sie gilt als Grenze und sollte keinesfalls überschritten werden.
La courbe de charge maximale est définie par la capacité de charge statique portante. Cette courbe ne devrait être dépassée en aucun moment y compris pour les charges par à-coups.
La curva de carga máxima queda definida por la capacidad de carga estática del cojinete. No se deben superar los valores de esta curva, ni siquiera con cargas provisorias de impacto.

Equation to Calculate the Expected Radial Bearing Life
Gelichung zur Ermittlung der Lagerlebensdauer

Equation to calculate the dynamic bearing life for a given load:
Bestimmung der erlaubten radialen Wellenbelastung mit vorgegebener Last

Use F_a, F_b and S in equation to determine hours of L_{10} bearing life.
Die Lebensdauer in Stunden ergibt sich durch einsetzen von F_a, F_b, und S in die nachstehende Formel.

$$L = \frac{3 \times 10^6}{60 \times S} \left\{ \frac{F_a}{F_b} \right\}^{3.33}$$

Where / Mit:

S = Shaft Speed RPM / Abtriebswellendrehzahl in min^{-1}
L = Life In Hours / Lebensdauer in Stunden
F_a = Dynamic side load defined by above curve at a distance from mounting flange. / Erlaubte radiale Wellenbelastung als Function der Laenge
F_b = Application side load. / Anwendungsseitige Wellenbelastung

Note: Calculations are based on L_{10} bearing life per ISO 281.
Auslegung basiert auf einer L_{10} Lenbendauer nach ISO 281

Code: AS

Wheel Mount w/Brake Lever / 7/8-14 SAE O-Ring

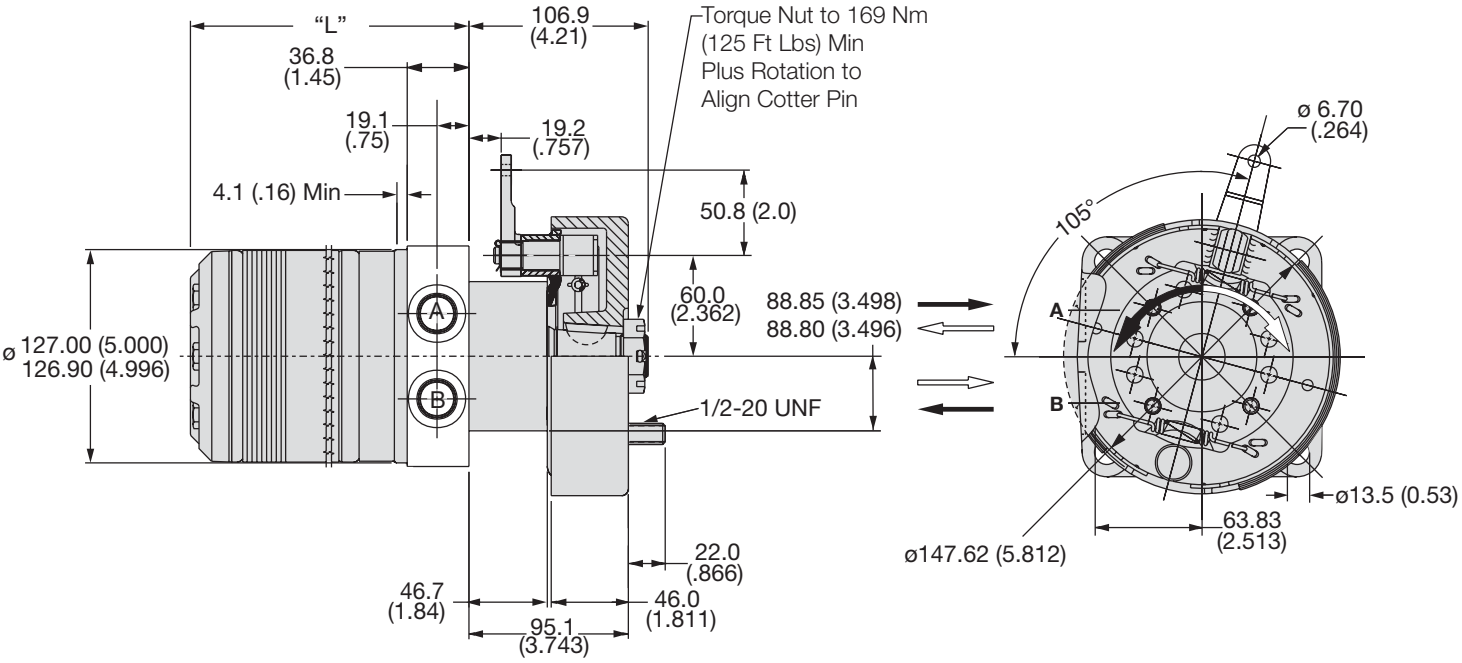

Note:

1. Brake Acuation Lever can be positioned in 12.00° increments from that shown.
   Bremshebel ist kreisförmig in Sigmenten von 12.00 ° positionierbar.
   Le levier de commande du frein peut être positionné à des échelons d'accroissement de 12,00° de ce qui est montré.
   El brazo de actuación del freno se puede colocar en avances de 12,00 grados con respecto a la posición mostrada.
2. Brake Acuation Lever is shipped unattached, secured with wire or tiewrap to assembly.
   Hebel ist anbei. Endmontage erforderlich.
   Le levier de commande du frein est expédié sous forme détachée; il est attaché à l'ensemble avec du fil ou du ruban.
   El brazo de actuación del freno se suministra suelto, sin conexión, sólo atado provisoriamente al mecanismo.

Code AS	**disp.**	**0080**	**0100**	**0130**	**0140**	**0170**	**0195**	**0240**	**0280**	**0360**	**0405**	**0475**
Weight/Gewicht	**kg**	**18.0**	**18.1**	**18.3**	**18.4**	**18.7**	**19.0**	**19.4**	**19.7**	**20.4**	**21.0**	**21.7**
Poids/Peso	(lb)	(39.74)	(39.84)	(40.34)	(40.64)	(41.14)	(41.84)	(42.74)	(43.34)	(45.04)	(46.34)	(47.74)
Length	**"L" mm**	**146**	**146**	**149**	**151**	**154**	**157**	**162**	**167**	**176**	**180**	**189**
	"L" (in)	(5.73)	(5.73)	(5.85)	(5.92)	(6.04)	(6.17)	(6.35)	(6.54)	(6.92)	(7.08)	(7.42)

For performance data curves, see TF section.

English equivalents for metric specifications are shown in ( ).

Drum Type/Trommelbremse/ Tipo de tambor/ Genre de Tambour

Code: A

4 Bolt

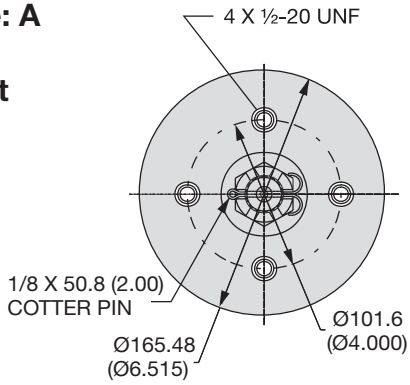

Code: B

5 Bolt

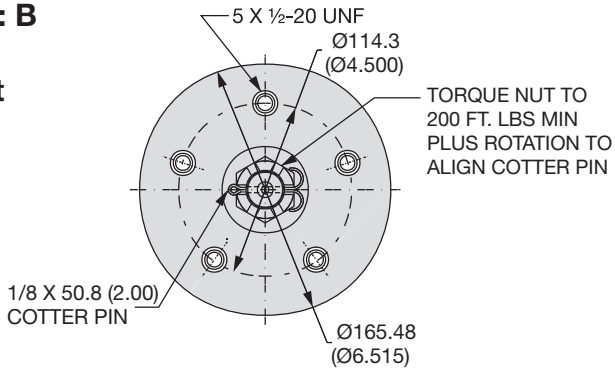

Shafts / Abtriebswellen Arbre / Ejes

Code: 8

1 1/4" Taper

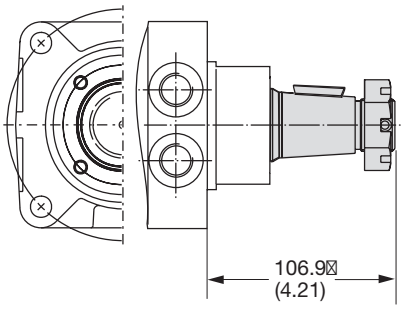

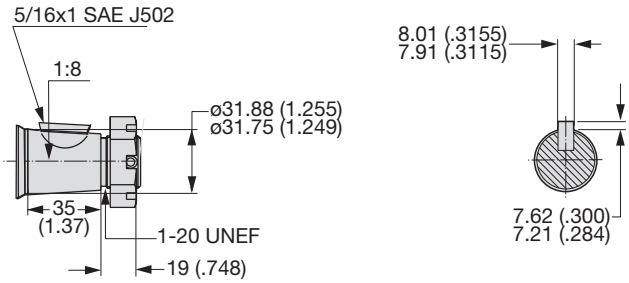

English equivalents for metric specifications are shown in ( ).

7 Displacements **7 Schluckvolumen** **7 Cylindrée** **7 Despazamientos**		(8.6 to 22.2 in³/rev) **140 . . . 364 cm³/rev**
	Cont.	**Int.**
Maximum Pressure **Eingangsdruck** **Pression entrée** **Presion Maxima**	(2750 psid) **. . . 190 bar**	(3500 psid) **. . . 241 bar**
Maximum Oil Flow **Schluckstrom** **Débit d'huile** **Caudal Maximo de Aceite**		(25 gpm) **. . . 95 lpm**
Maximum Speed **Drehzahl** **Vitesse de rotation** **Velocidad Maxima**		(484 rpm) **484 rpm**
	Cont.	**Int.**
Maximum Torque **MaxDrehmoment** **Couple** **Torque Maximo**	(8,650 lb in) **977 Nm**	(10,300 lb in) **1164 Nm**

Exceptional Power Density and Durability

The heart of the new compact Torqmotor™ is the strongest drive train in its class. Coupled with this extra heavy-duty drive train are the high efficiencies and low speed performance for which the Parker Torqmotor™ is known. As with all Torqmotors™, high speed valving and full flow drive train lubrication are standard. Case drains are not required. Roller vanes and a sealed commutator maintain high efficiencies and provide smooth low speed performance.

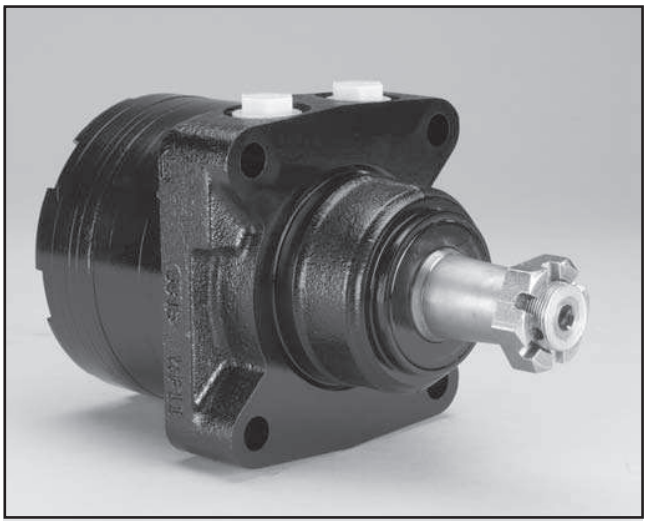

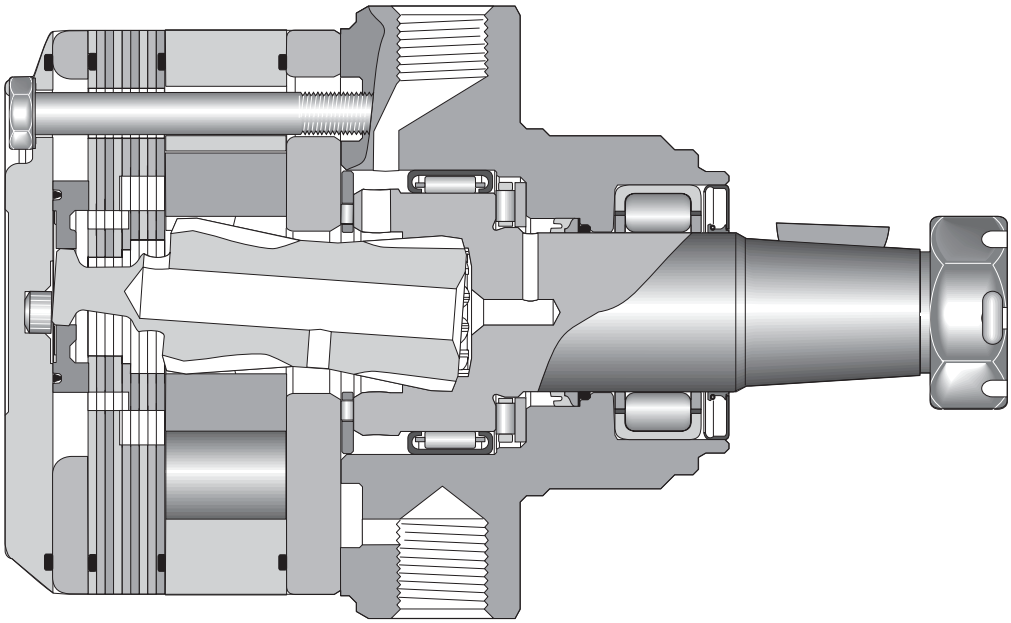

TL	XXXX	X	X	XX	0	XXXX
Series	Displacement Schluckvolumen Cylindrée Desplazamiento	Mounting Gehäuse Carter Montaje	Ports Anschluß Plan de raccordement Lumbreras	Shaft Welle Arbre Eje	Rotation Drehrichtung Direction de rotation Rotacion	Options Opciones

Code	cm^3/tr cm^3/giro cm^3/U	in^3/rev
0140	141 /	8.6
0170	169 /	10.3
0195	195 /	11.9
0240	238 /	14.5
0280	280 /	17.1
0310	310 /	18.9
0360	364 /	22.2

Code	Mounting
L	Wheel, Front Brake Nose 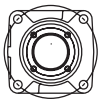
U	Wheel, Standard

Code	Ports
S	7/8-14 SAE 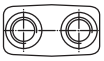

Code	Front Port Rotation
0	Standard
1	Reverse Timed Manifold

Code	
AAAB	No Paint No lackiert
AAAA	Black Paint Schwarz lackiert

Code	Shaft
08	1 1/4" Tapered

For other available options, see pages 257–258.

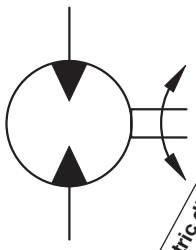

Motor Series TL	Geometric displacement / Geom. Schluckvolumen / Cylindrée / Cilindrata	Max. speed @ Max. intermittent flow / Max. Drehzahl Intermittierender Betrieb: / Vitesse de rotation maxi / Velocidad maxima a caudal intermitente maximo	Max. oil flow / Max. Schluckstrom / Débit d'huile maxi / Portata max	Max. differential pressure / Max. Druckgefälle / Chute de pression maxi / Presion diferencial maxima	Max. supply pressure / Max. Eingangsdruck / Pression maxi entrée / Presion maxima de alimentacion	Max. torque / Max. Drehmoment / Couple maxi / Torque Maximo	Max. performance / Max. Leistungabgabe / Puissance de sortie maxi / Potenza meccanica max	Min. starting torque / Min. Anlaufmoment / Couple min. fourni au dé manrage / Torque minimo de arranque
	cm³/rev in³/rev	rev/min	***cont / int*** **l/min** g/min	***cont / int*** **bar** psid	***max*** **bar** psig	***cont / int*** **Nm** lb-in	***max*** **KW** HP	***cont / int*** **Nm** lb-in
TL0140	**140** 8.6	613	**68 95** 18 25	**190 241** 2750 3500	**300** 4350	**364 463** 3226 4095	**30** 40	**294 365** 2606 3234
TL0170	**169** 10.3	512	**68 95** 18 25	**190 241** 2750 3500	**300** 4350	**449 570** 3970 5042	**31** 41	**354 445** 3137 3943
TL 0195	**195** 11.9	484	**68 95** 18 25	**190 241** 2750 3500	**300** 4350	**511 648** 4520 5739	**34** 46	**414 526** 3666 4654
TL 0240	**238** 14.5	399	**68 95** 18 25	**190 241** 2750 3500	**300** 4350	**620 790** 5485 6990	**34** 46	**536 679** 4740 6011
TL 0280	**280** 17.1	335	**68 95** 18 25	**190 241** 2750 3500	**300** 4350	**730 929** 6460 8218	**34** 45	**619 787** 5479 6967
TL 0310	**310** 18.9	310	**68 95** 18 25	**190 241** 2750 3500	**300** 4350	**847 1079** 7499 9548	**36** 48	**713 907** 6309 8029
TL 0360	**364** 22.2	255	**68 95** 18 25	**172 224** 2500 3250	**300** 4350	**890 1163** 7874 10293	**31** 42	**778 1002** 6882 8867

Performance data based on testing using 10W40 oil with a viscosity of 200 SUS at 54° C (130° F.). Performance data is typical. Actual data may vary slightly from one production motor to another.

Les donnees sur les performances sont basees sur des tests utilisant de l'huile 10W40 d'une viscosite de 200 SUS a 54°C (130°F). Ces donnees correspondent a des situations typiques. Les donnees reelles peuvent varier legerement d'un moteur de production a l'autre.

Leistungsdaten sind gemessen mit SAE 10W40 bei einer Viskositaet von 43,1 Cst bei 54°C. Geringfuegige Abweichungen von den Katalogdaten sind moeglich.

Datos tecnicos obtenidos con aceite 10W40 de 200 SUS de viscosidad a 54°C (130°F). Los datos proporcionados son valores tipcos. Los valores exactos reales podrian tener una pequena variacion entre distintos motores.

Intermittent operation rating applies to 10% of every minute.

Intermittierende Werte maximal 10% von jeder Betriebsminute.

Fonctionnement interm. 10% max. de chaque minute d`utilisation.

Capacidad de funcionamiento intermitente valida para 10% por cada minuto.

Peak operation rating applies to 1% max of every minute.

TL 0140

8.6 cu in / rev

PRESSURE (PSID)

Flow (GPM)	500	1000	1500	2000	2500	2750	3000	3500
.5	364 **12**	955 **11**	1531 **10**	2115 **9**	2719 **7**	3016 **6**	3288 **5**	3803 **2**
1	395 **25**	1014 **24**	1599 **23**	2174 **21**	2761 **19**	3056 **17**	3352 **16**	3871 **13**
2	408 **51**	1011 **49**	1634 **47**	2229 **45**	2828 **42**	3127 **40**	3421 **38**	3943 **35**
3	411 **77**	1029 **74**	1659 **72**	2257 **69**	2856 **65**	3191 **63**	3459 **62**	4006 **57**
4	414 **103**	1040 **99**	1675 **96**	2286 **93**	2900 **89**	3226 **86**	3509 **83**	4054 **78**
5	407 **129**	1039 **126**	1685 **123**	2285 **119**	2899 **113**	3210 **110**	3532 **108**	4075 **102**
7	381 **182**	1004 **177**	1646 **172**	2250 **168**	2862 **162**	3180 **158**	3499 **155**	4095 **147**
9	338 **235**	951 **231**	1599 **226**	2208 **220**	2802 **213**	3117 **208**	3422 **203**	4041 **193**
12	263 **308**	856 **303**	1485 **297**	2093 **290**	2693 **283**	2983 **278**	3314 **272**	3957 **260**
15	170 **380**	771 **376**	1381 **371**	1983 **364**	2587 **356**	2898 **350**	3219 **343**	3838 **328**
20	65 **454**	659 **446**	1242 **437**	1864 **430**	2443 **422**	2748 **418**	3100 **413**	3744 **399**
25		361 **613**	896 **601**	1464 **588**	2046 **575**	2363 **567**	2770 **558**	3455 **539**

TORQUE (LB IN) 2770
SPEED (RPM) 558

140 cc / rev

EU

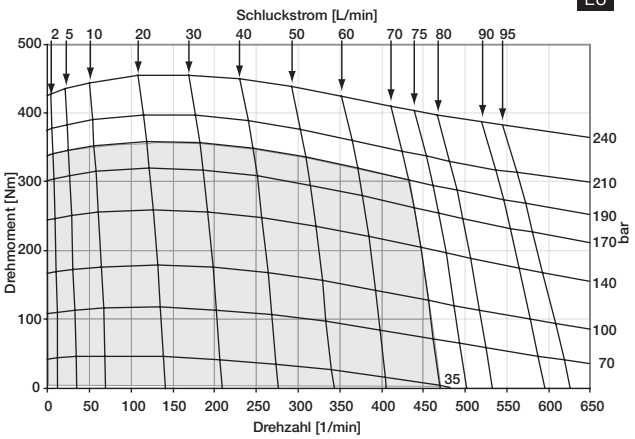

Cont. Int.

Intermittent operation rating applies to 10% of every minute.

Intermittierende Werte maximal 10% von jeder Betriebsminute.

Fonctionnement interm. 10% max. de chaque minute d`utilisation.

Capacidad de funcionamiento intermitente valida para 10% por cada minuto.

Performance data based on testing using 10W40 oil with a viscosity of 200 SUS at 54° C (130° F.). Performance data is typical. Actual data may vary slightly from one production motor to another.

Leistungsdaten sind gemessen mit SAE 10W40 bei einer Viskositaet von 43,1 Cst bei 54ºC. Geringfuegige Abweichungen von den Katalogdaten sind moeglich.

Les donnees sur les performances sont basees sur des tests utilisant de l'huile 10W40 d'une viscosite de 200 SUS a 54°C (130°F). Ces donnees correspondent a des situations typiques. Les donnees reelles peuvent varier legerement d'un moteur de production a l'autre.

Datos tecnicos obtenidos con aceite 10W40 de 200 SUS de viscosidad a 54°C (130°F). Los datos proporcionados son valores tipcos. Los valores exactos reales podrian tener una pequena variacion entre distintos motores.

TL 0170

10.3 cu in / rev **169 cc / rev**

EU

PRESSURE (PSID)

	500	1000	1500	2000	2500	2750	3000	3500
.5	499 **10**	1226 **10**	1937 **9**	2656 **7**	3395 **6**	3760 **5**	4100 **4**	4750 **2**
1	530 **21**	1285 **20**	2005 **19**	2715 **17**	3437 **16**	3800 **15**	4164 **13**	4818 **11**
2	543 **43**	1282 **41**	2040 **39**	2770 **38**	3504 **35**	3871 **34**	4233 **32**	4890 **29**
3	546 **64**	1300 **62**	2065 **60**	2798 **58**	3532 **55**	3935 **53**	4271 **52**	4953 **48**
4	549 **86**	1311 **83**	2081 **80**	2827 **78**	3576 **74**	3970 **72**	4321 **70**	5001 **66**
5	542 **108**	1310 **105**	2091 **102**	2826 **99**	3575 **95**	3954 **92**	4344 **90**	5022 **85**
7	516 **152**	1275 **148**	2052 **144**	2791 **140**	3538 **135**	3924 **132**	4311 **129**	5042 **123**
9	473 **196**	1222 **193**	2005 **189**	2749 **184**	3478 **178**	3861 **174**	4234 **169**	4988 **162**
12	398 **257**	1127 **253**	1891 **248**	2634 **242**	3369 **236**	3727 **232**	4126 **227**	4904 **217**
15	305 **317**	1042 **314**	1787 **310**	2524 **304**	3263 **297**	3642 **293**	4031 **286**	4785 **274**
20	200 **379**	930 **372**	1648 **365**	2405 **359**	3119 **352**	3492 **349**	3912 **345**	4691 **333**
25		632 **512**	1302 **502**	2005 **491**	2722 **480**	3107 **474**	3582 **466**	4402 **450**

Flow (GPM)

TORQUE (LB IN) 3582
SPEED (RPM) 466

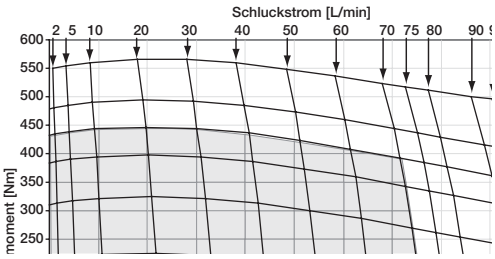

Cont. Int.

Intermittent operation rating applies to 10% of every minute.

Fonctionnement interm. 10% max. de chaque minute d`utilisation.

Performance data based on testing using 10W40 oil with a viscosity of 200 SUS at 54° C (130° F.). Performance data is typical. Actual data may vary slightly from one production motor to another.

Les donnees sur les performances sont basees sur des tests utilisant de l'huile 10W40 d'une viscosite de 200 SUS a 54°C (130°F). Ces donnees correspondent a des situations typiques. Les donnees reelles peuvent varier legerement d'un moteur de production a l'autre.

Intermittierende Werte maximal 10% von jeder Betriebsminute.

Capacidad de funcionamiento intermitente valida para 10% por cada minuto.

Leistungsdaten sind gemessen mit SAE 10W40 bei einer Viskositaet von 43,1 Cst bei 54ºC. Geringfuegige Abweichungen von den Katalogdaten sind moeglich.

Datos tecnicos obtenidos con aceite 10W40 de 200 SUS de viscosidad a 54°C (130°F). Los datos proporcionados son valores tipcos. Los valores exactos reales podrian tener una pequena variacion entre distintos motores.

TL 0195

11.9 cu in / rev

PRESSURE (PSID)

Flow (GPM)	500	1000	1500	2000	2500	2750	3000	3500
.5	571 **9**	1353 **7**	2148 **5**	2938 **3**				
1	609 **18**	1417 **16**	2234 **14**	3032 **12**	3873 **10**	4250 **8.5**	4641 **7**	5400 **4**
2	621 **37**	1443 **35**	2267 **33**	3086 **30**	3923 **27**	4300 **25.5**	4712 **24**	5450 **19**
3	619 **56**	1448 **54**	2279 **52**	3104 **49**	3952 **46**	4331 **44**	4727 **42**	5490 **37**
4	615 **75**	1456 **73**	2303 **71**	3142 **68**	3963 **64**	4371 **61.5**	4761 **59**	5535 **53.5**
5	604 **94**	1448 **92**	2301 **90**	3148 **87**	3980 **82**	4400 **79.5**	4792 **77**	5587 **72**
7	571 **132**	1419 **130**	2272 **127**	3125 **123**	3965 **119**	4370 **116**	4784 **113**	5590 **107**
9	518 **170**	1364 **168**	2223 **165**	3072 **161**	3911 **155**	4310 **152**	4738 **149**	5549 **142**
12	437 **226**	1264 **224**	2113 **221**	2956 **216**	3792 **210**	4191 **206.8**	4620 **203**	5433 **195**
15	344 **283**	1164 **281**	2003 **277**	2835 **272**	3668 **265**	4062 **261**	4498 **257**	5314 **248**
20	189 **343**	1013 **340**	1833 **333**	2633 **325**	3461 **319**	3876 **315**	4295 **310**	5116 **300**
25		613 **468**	1397 **460**	2100 **452**	2903 **443**	3302 **438**	3750 **433**	4542 **422**

TORQUE (LB IN) 3750
SPEED (RPM) 433

195 cc / rev

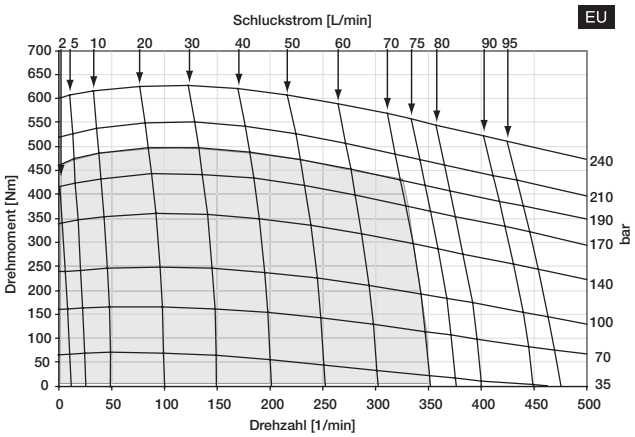

Cont. Int.

Intermittent operation rating applies to 10% of every minute.

Fonctionnement interm. 10% max. de chaque minute d`utilisation.

Performance data based on testing using 10W40 oil with a viscosity of 200 SUS at 54° C (130° F.). Performance data is typical. Actual data may vary slightly from one production motor to another.

Les donnees sur les performances sont basees sur des tests utilisant de l'huile 10W40 d'une viscosite de 200 SUS a 54°C (130°F). Ces donnees correspondent a des situations typiques. Les donnees reelles peuvent varier legerement d'un moteur de production a l'autre.

Intermittierende Werte maximal 10% von jeder Betriebsminute.

Capacidad de funcionamiento intermitente valida para 10% por cada minuto.

Leistungsdaten sind gemessen mit SAE 10W40 bei einer Viskositaet von 43,1 Cst bei 54ºC. Geringfuegige Abweichungen von den Katalogdaten sind moeglich.

Datos tecnicos obtenidos con aceite 10W40 de 200 SUS de viscosidad a 54°C (130°F). Los datos proporcionados son valores tipcos. Los valores exactos reales podrian tener una pequena variacion entre distintos motores.

TL 0240

14.5 cu in / rev

PRESSURE (PSID)

Flow (GPM)	500	1000	1500	2000	2500	2750	3000	3500
.5	705 **8**	1662 **8**	2641 **7**	3635 **6**	4620 **5**	5095 **5**	5585 **4**	6536 **3**
1	752 **16**	1740 **15**	2740 **14**	3746 **14**	4739 **13**	5200 **12**	5712 **11**	6661 **10**
2	772 **31**	1783 **30**	2799 **30**	3818 **29**	4830 **27**	5300 **26**	5823 **25**	6793 **23**
3	769 **47**	1784 **46**	2812 **45**	3844 **44**	4863 **42**	5362 **41**	5857 **40**	6828 **37**
4	766 **62**	1797 **62**	2840 **61**	3887 **59**	4923 **57**	5384 **56**	5932 **55**	6910 **51**
5	751 **78**	1790 **77**	2842 **76**	3895 **75**	4933 **72**	5438 **71**	5951 **69**	6946 **66**
7	710 **109**	1758 **108**	2816 **107**	3875 **105**	4920 **102**	5425 **101**	5947 **99**	6958 **95**
9	649 **141**	1697 **139**	2762 **138**	3826 **136**	4875 **132**	5387 **130**	5908 **128**	6922 **124**
12	553 **188**	1583 **186**	2633 **184**	3675 **182**	4706 **178**	5219 **175**	5725 **172**	6734 **167**
15	438 **235**	1471 **233**	2499 **230**	3513 **227**	4520 **223**	4998 **220**	5526 **217**	6534 **211**
20	312 **282**	1350 **279**	2300 **276**	3305 **273**	4310 **267**	4732 **264**	5250 **261**	6200 **254**
25		1021 **388**	1837 **384**	2710 **380**	3735 **373**	4060 **370**	4500 **365**	5423 **354**

TORQUE (LB IN) 4500
SPEED (RPM) 365

238 cc / rev

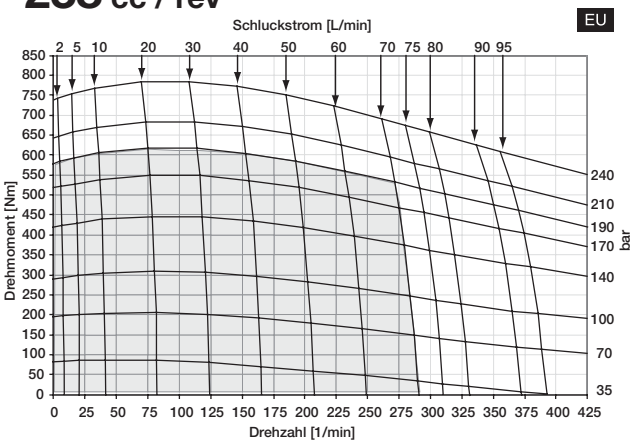

Cont. Int.

Intermittent operation rating applies to 10% of every minute.

Fonctionnement interm. 10% max. de chaque minute d`utilisation.

Performance data based on testing using 10W40 oil with a viscosity of 200 SUS at 54° C (130° F.). Performance data is typical. Actual data may vary slightly from one production motor to another.

Les donnees sur les performances sont basees sur des tests utilisant de l'huile 10W40 d'une viscosite de 200 SUS a 54°C (130°F). Ces donnees correspondent a des situations typiques. Les donnees reelles peuvent varier legerement d'un moteur de production a l'autre.

Intermittierende Werte maximal 10% von jeder Betriebsminute.

Capacidad de funcionamiento intermitente valida para 10% por cada minuto.

Leistungsdaten sind gemessen mit SAE 10W40 bei einer Viskositaet von 43,1 Cst bei 54ºC. Geringfuegige Abweichungen von den Katalogdaten sind moeglich.

Datos tecnicos obtenidos con aceite 10W40 de 200 SUS de viscosidad a 54°C (130°F). Los datos proporcionados son valores tipcos. Los valores exactos reales podrian tener una pequena variacion entre distintos motores.

TL 0280

17.1 cu in / rev

PRESSURE (PSID)

Flow (GPM)	500	1000	1500	2000	2500	2750	3000	3500
.5	887 **7**	2008 **6**	3147 **5**	4299 **4**	5458 **3**	6022 **2**	6599 **2**	7724 **0**
1	947 **13**	2093 **13**	3262 **12**	4424 **11**	5582 **10**	6144 **9**	6715 **8**	7812 **6**
2	982 **27**	2164 **26**	3361 **25**	4561 **24**	5745 **22**	6315 **21**	6902 **19**	8033 **15**
3	982 **40**	2167 **39**	3366 **39**	4570 **37**	5757 **36**	6356 **34**	6943 **32**	8070 **28**
4	984 **53**	2184 **52**	3397 **51**	4612 **50**	5820 **48**	6435 **46**	6985 **45**	8147 **40**
5	975 **66**	2185 **65**	3409 **64**	4634 **62**	5841 **60**	6417 **58**	7031 **56**	8201 **52**
7	931 **93**	2149 **92**	3381 **90**	4614 **88**	5829 **85**	6420 **83**	7029 **81**	8200 **76**
9	865 **119**	2083 **118**	3319 **117**	4556 **114**	5780 **110**	6396 **108**	6992 **106**	8193 **101**
12	746 **159**	1956 **158**	3190 **156**	4428 **153**	5661 **149**	6270 **147**	6885 **143**	8089 **137**
15	581 **199**	1800 **198**	3025 **196**	4255 **192**	5494 **187**	6128 **184**	6721 **181**	7912 **174**
20	415 **239**	1650 **238**	2850 **235**	4120 **230**	5350 **224**	5995 **221**	6570 **217**	7750 **209**
25	50 **332**	1240 **330**	2450 **327**	3700 **320**	5000 **312**	5650 **307**	6170 **302**	7340 **290**

TORQUE (LB IN) 6170
SPEED (RPM) 302

280 cc / rev

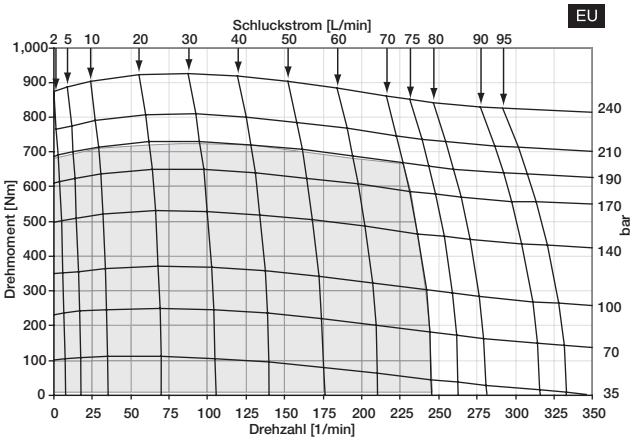

Cont. Int.

Intermittent operation rating applies to 10% of every minute.

Fonctionnement interm. 10% max. de chaque minute d`utilisation.

Performance data based on testing using 10W40 oil with a viscosity of 200 SUS at 54° C (130° F.). Performance data is typical. Actual data may vary slightly from one production motor to another.

Les donnees sur les performances sont basees sur des tests utilisant de l'huile 10W40 d'une viscosite de 200 SUS a 54°C (130°F). Ces donnees correspondent a des situations typiques. Les donnees reelles peuvent varier legerement d'un moteur de production a l'autre.

Intermittierende Werte maximal 10% von jeder Betriebsminute.

Capacidad de funcionamiento intermitente valida para 10% por cada minuto.

Leistungsdaten sind gemessen mit SAE 10W40 bei einer Viskositaet von 43,1 Cst bei 54ºC. Geringfuegige Abweichungen von den Katalogdaten sind moeglich.

Datos tecnicos obtenidos con aceite 10W40 de 200 SUS de viscosidad a 54°C (130°F). Los datos proporcionados son valores tipcos. Los valores exactos reales podrian tener una pequena variacion entre distintos motores.

TL 0310

18.9 cu in / rev

310 cc / rev

EU

PRESSURE (PSID)

Flow (GPM)	500	1000	1500	2000	2500	2750	3000	3500
.5	1031 **6**	2296 **5**	3579 **5**	4875 **4**	6178 **3**	6814 **2**	7463 **2**	8732 **0**
1	1091 **12**	2381 **11**	3694 **11**	5000 **10**	6302 **9**	6936 **8**	7579 **7**	8820 **5**
2	1126 **24**	2452 **24**	3793 **23**	5137 **22**	6465 **20**	7107 **19**	7766 **17**	9041 **14**
3	1126 **36**	2455 **36**	3798 **35**	5146 **34**	6477 **32**	7148 **31**	7807 **29**	9078 **25**
4	1128 **48**	2472 **47**	3829 **46**	5188 **45**	6540 **43**	7227 **42**	7849 **40**	9155 **36**
5	1119 **60**	2473 **59**	3841 **58**	5210 **56**	6561 **54**	7209 **52**	7895 **51**	9209 **47**
7	1075 **84**	2437 **83**	3813 **81**	5190 **80**	6549 **77**	7212 **75**	7893 **73**	9208 **69**
9	1009 **108**	2371 **107**	3751 **106**	5132 **103**	6500 **99**	7188 **98**	7856 **96**	9201 **91**
12	890 **144**	2244 **143**	3622 **141**	5004 **138**	6381 **135**	7062 **132**	7749 **129**	9097 **124**
15	725 **180**	2088 **179**	3457 **177**	4831 **174**	6214 **169**	6920 **166**	7585 **164**	8920 **157**
20	559 **216**	1938 **215**	3282 **213**	4696 **208**	6070 **203**	6787 **200**	7434 **196**	8758 **189**
25	194 **300**	1528 **298**	2882 **295**	4276 **289**	5720 **282**	6442 **277**	7034 **273**	8348 **262**

TORQUE (LB IN) 7034
SPEED (RPM) 273

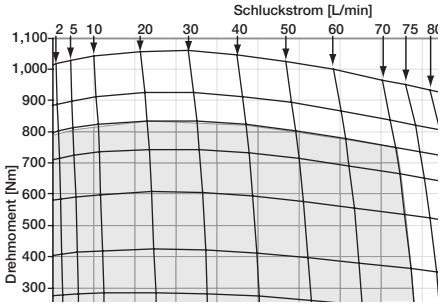

Cont. Int.

Intermittent operation rating applies to 10% of every minute.

Fonctionnement interm. 10% max. de chaque minute d`utilisation.

Performance data based on testing using 10W40 oil with a viscosity of 200 SUS at 54° C (130° F.). Performance data is typical. Actual data may vary slightly from one production motor to another.

Les donnees sur les performances sont basees sur des tests utilisant de l'huile 10W40 d'une viscosite de 200 SUS a 54°C (130°F). Ces donnees correspondent a des situations typiques. Les donnees reelles peuvent varier legerement d'un moteur de production a l'autre.

Intermittierende Werte maximal 10% von jeder Betriebsminute.

Capacidad de funcionamiento intermitente valida para 10% por cada minuto.

Leistungsdaten sind gemessen mit SAE 10W40 bei einer Viskositaet von 43,1 Cst bei 54ºC. Geringfuegige Abweichungen von den Katalogdaten sind moeglich.

Datos tecnicos obtenidos con aceite 10W40 de 200 SUS de viscosidad a 54°C (130°F). Los datos proporcionados son valores tipcos. Los valores exactos reales podrian tener una pequena variacion entre distintos motores.

TL 0360

22.2 cu in / rev

PRESSURE (PSID)

Flow (GPM)	500	1000	1500	2000	2500	2750	3000	3250
.5	1294 **5**	2821 **5**	4367 **4**	5926 **3**	7491 **2**	8259 **2**	9039 **1**	9810 **1**
1	1354 **10**	2906 **10**	4482 **9**	6051 **8**	7615 **8**	8381 **7**	9155 **6**	9947 **6**
2	1389 **20**	2977 **20**	4581 **19**	6188 **18**	7778 **17**	8552 **16**	9342 **15**	10152 **14**
3	1389 **31**	2980 **30**	4586 **30**	6197 **29**	7790 **27**	8593 **26**	9383 **25**	10190 **24**
4	1391 **41**	2997 **40**	4617 **39**	6239 **38**	7853 **37**	8672 **36**	9425 **34**	10262 **33**
5	1382 **51**	2998 **50**	4629 **49**	6261 **48**	7874 **46**	8654 **45**	9471 **43**	10288 **42**
7	1338 **72**	2962 **71**	4601 **69**	6241 **68**	7862 **65**	8657 **64**	9469 **62**	10293 **61**
9	1272 **92**	2896 **91**	4539 **90**	6183 **88**	7813 **85**	8633 **83**	9432 **82**	10261 **79**
12	1153 **122**	2769 **122**	4410 **120**	6055 **118**	7694 **115**	8507 **113**	9325 **110**	10144 **108**
15	988 **153**	2613 **152**	4245 **151**	5882 **148**	7527 **144**	8365 **142**	9161 **139**	9985 **136**
20	822 **184**	2463 **183**	4070 **181**	5747 **177**	7383 **173**	8232 **170**	9010 **167**	9847 **164**
25	457 **255**	2053 **254**	3670 **251**	5327 **246**	7033 **240**	7887 **236**	8610 **232**	9472 **227**

TORQUE (LB IN) 8610
SPEED (RPM) 232

364 cc / rev

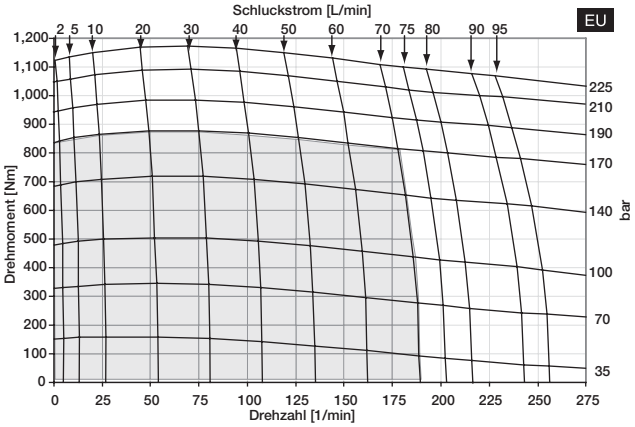

Cont. Int.

Intermittent operation rating applies to 10% of every minute.

Fonctionnement interm. 10% max. de chaque minute d`utilisation.

Performance data based on testing using 10W40 oil with a viscosity of 200 SUS at 54° C (130° F.). Performance data is typical. Actual data may vary slightly from one production motor to another.

Les donnees sur les performances sont basees sur des tests utilisant de l'huile 10W40 d'une viscosite de 200 SUS a 54°C (130°F). Ces donnees correspondent a des situations typiques. Les donnees reelles peuvent varier legerement d'un moteur de production a l'autre.

Intermittierende Werte maximal 10% von jeder Betriebsminute.

Capacidad de funcionamiento intermitente valida para 10% por cada minuto.

Leistungsdaten sind gemessen mit SAE 10W40 bei einer Viskositaet von 43,1 Cst bei 54ºC. Geringfuegige Abweichungen von den Katalogdaten sind moeglich.

Datos tecnicos obtenidos con aceite 10W40 de 200 SUS de viscosidad a 54°C (130°F). Los datos proporcionados son valores tipcos. Los valores exactos reales podrian tener una pequena variacion entre distintos motores.

Wheel Mount / Radnabengehäuse
Monture à roue/ Montaje de rueda

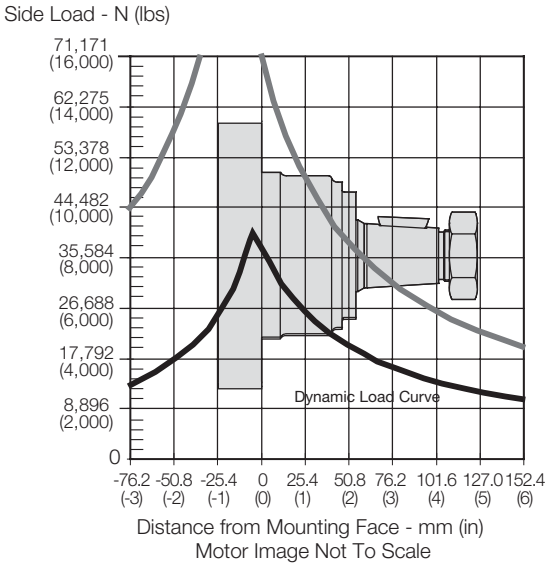

The dynamic side load curve is based on uni-directional steady state loads for L_{10} bearing life at 3 x 10^6 revolutions.
Die zulässige auslegbare radiale Wellenbelastungskurve ist unter ruhenden, einseitig statisch gerichteten Lastverhältnissen auf eine L_{10} Lebensdauer mit 3 x 10^6 Umdrehungen kalkuliert.
La courbe de charge latérale permise se base sur des charges unidirectionnelles en régime permanent pour le roulement L_{10} à 3 x 10^6 révolutions.
La curva de valores admisibles de carga lateral está basada en cargas constantes para cojinetes L_{10} a 3 x 10^6 revoluciones.

The maximum load curve is defined by bearing static load capacity. This curve should not be exceeded at any time including shock loads.
Die maximale radiale Wellenbelastungskurve ist definiert als maximale statische Last ohne Drehzahl. Sie gilt als Grenze und sollte keinesfalls überschritten werden.
La courbe de charge maximale est définie par la capacité de charge statique portante. Cette courbe ne devrait être dépassée en aucun moment y compris pour les charges par à-coups.
La curva de carga máxima queda definida por la capacidad de carga estática del cojinete. No se deben superar los valores de esta curva, ni siquiera con cargas provisorias de impacto.

Equation to Calculate the Expected Radial Bearing Life
Gleichung zur Ermittlung der Lagerlebensdauer

Equation to calculate the dynamic bearing life for a given load:
Bestimmung der erlaubten radialen Wellenbelastung mit vorgegebener Last

Use F_a, F_b and S in equation to determine hours of L_{10} bearing life.
Die Lebensdauer in Stunden ergibt sich durch einsetzen von F_a, F_b, und S in die nachstehende Formel.

$$L = \frac{3 \times 10^6}{60 \times S} \left\{ \frac{F_a}{F_b} \right\}^{3.33}$$

Where / Mit:

S = Shaft Speed RPM / Abtriebswellendrehzahl in min^{-1}
L = Life In Hours / Lebensdauer in Stunden
F_a = Dynamic side load defined by above curve at a distance from mounting flange. / Erlaubte radiale Wellenbelastung als Function der Laenge
F_b = Application side load. / Anwendungsseitige Wellenbelastung

Code: L US

Wheel, Front Brake Nose

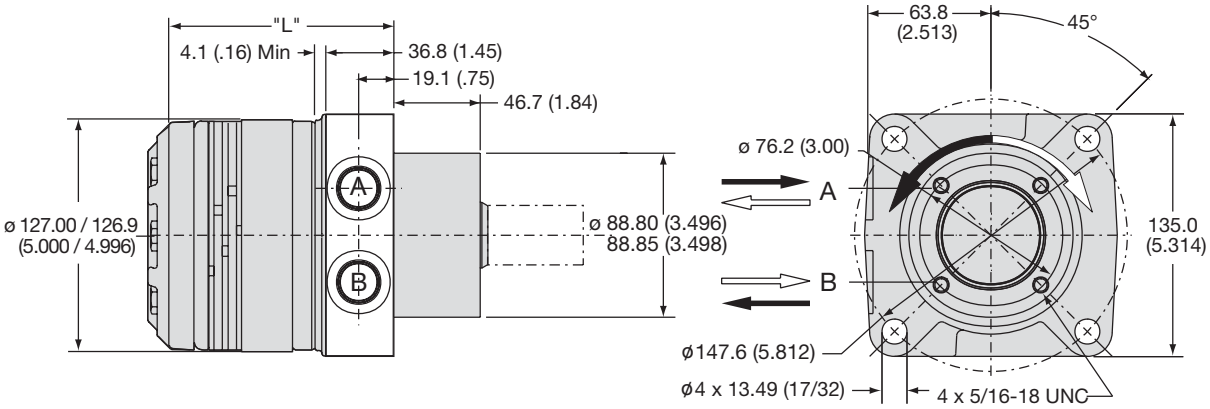

Code L disp.	0140	0170	0195	0240	0280	0310	0360
Weight/Gewicht kg	**10.9**	**11.1**	**11.4**	**11.8**	**12.2**	**12.4**	**12.9**
Length "L" mm	**124**	**124**	**124**	**127**	**132**	**135**	**143**

Code: U US

Wheel, Standard

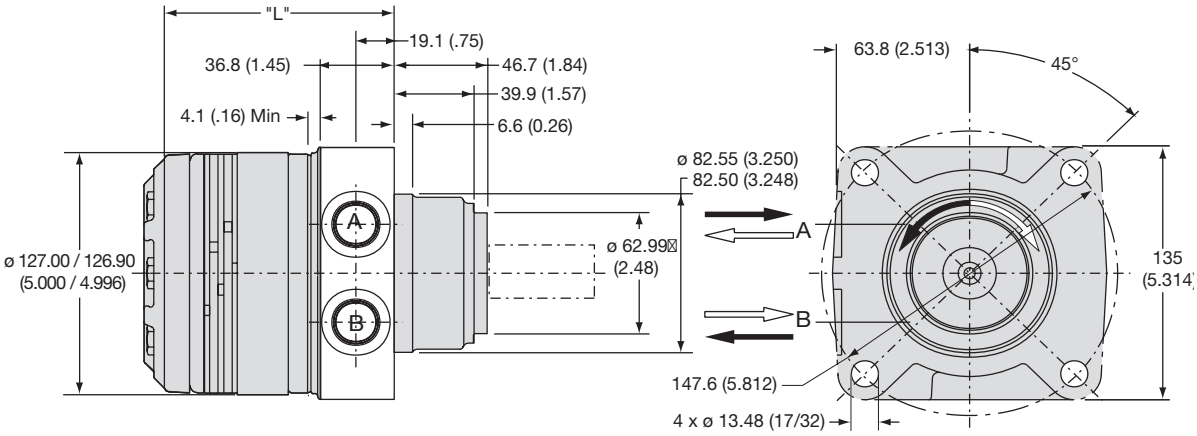

Code U disp.	0140	0170	0195	0240	0280	0310	0360
Weight/Gewicht kg	**10.9**	**11.1**	**11.4**	**11.8**	**12.2**	**12.4**	**12.9**
Poids/Peso (lb)	(24.1)	(24.6)	(25.2)	(26.0)	(26.9)	(27.4)	(28.4)
Length "L" mm	**124**	**124**	**124**	**127**	**132**	**135**	**143**
"L" (in)	(4.83)	(4.83)	(4.83)	(4.99)	(5.16)	(5.30)	(5.58)

English equivalents for metric specifications are shown in ( ).

Code: S US

7/8-14 SAE O-Ring

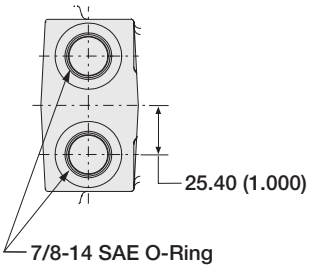

English equivalents for metric specifications are shown in ( ).

Code L & U

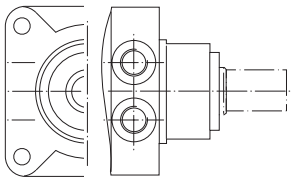

Code: 08 EU US

1 1/4" Tapered

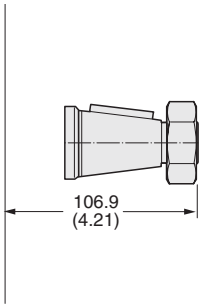

Code: 08 EU US

1 1/4" Tapered

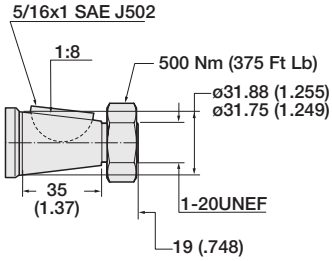

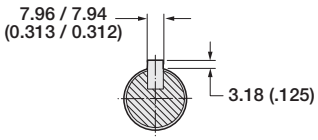

English equivalents for metric specifications are shown in ( ).

13 Displacements **13 Schluckvolumen** **13 Cylindrée** **13 Despazamientos**		(8.6 to 58.5 in³/rev) **141 . . . 959 cm³/rev**
	Cont.	**Int.**
Maximum Pressure **Eingangsdruck** **Pression entrée** **Presion Maxima**	(3000 psid) **. . . 207 bar**	(4000 psid) **. . . 276 bar**
Maximum Oil Flow **Schluckstrom** **Débit d'huile** **Caudal Maximo de Aceite**		(30 gpm) **. . . 114 lpm**
Maximum Speed **Drehzahl** **Vitesse de rotation** **Velocidad Maxima**		(660 rpm) **660 rpm**
	Cont.	**Int.**
Maximum Torque **MaxDrehmoment** **Couple** **Torque Maximo**	(9,239 lb in) **1044 Nm**	(12,636 lb in) **1428 Nm**
Maximum Side Load at Key **Seitenlast** **Charges latèrales** **Carga Maxima Lateral**		(3597 lb) **. . . 16000 N**

Exceptional Strength and Durability in a High Performance Motor

The heart of Parker's TG Series powertrain, the torque link, is an extra heavy duty part that includes patented 60:40 spline geometry. Rugged construction throughout allows the transmission of over 13,000 lb-in of torque. The entire powertrain is continually washed in cool, high flow fluid to assure long life. Roller vanes and sealed commutator maintain high efficiency and provide smooth low speed performance.

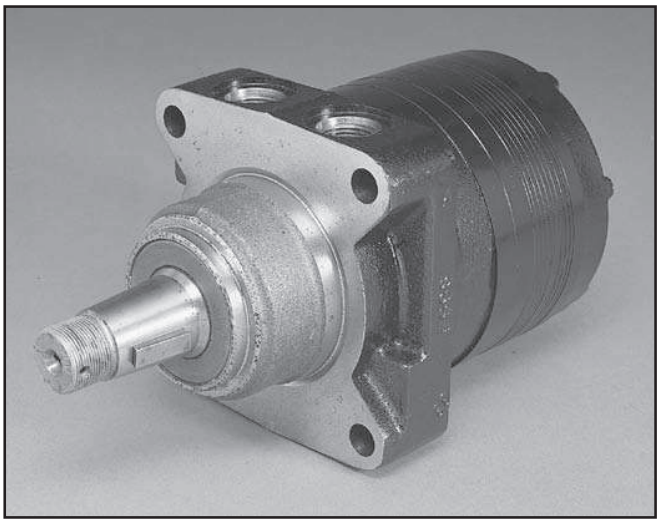

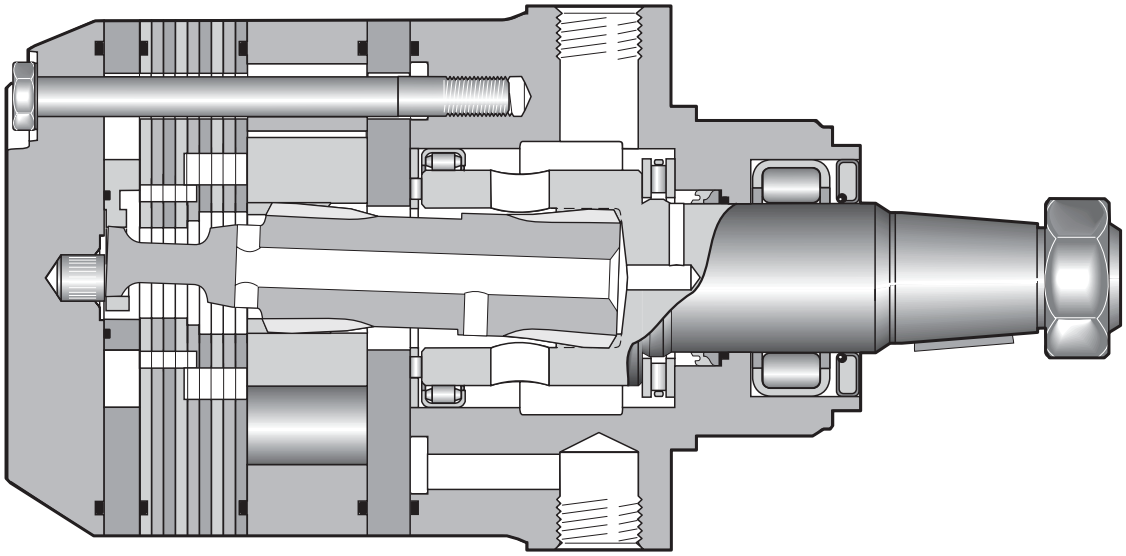

TG

Series

XXXX

Displacement
Schluckvolumen
Cylindrée
Desplazamiento

Code	cm³/tr cm³/giro cm³/U	in³/rev
0140	141 /	8.6
0170	169 /	10.3
0195	195 /	11.9
0240	238 /	14.5
0280	280 /	17.1
0310	310 /	18.9
0335	337 /	20.6
0405	405 /	24.7
0475	477 /	29.1
0530	528 /	32.3
0625	623 /	38.0
0785	786 /	48.0
0960	959 /	58.5

XX

Mounting
Gehäuse
Carter
Montaje

Code	Mounting
A	SAE "A" 2 Bolt
B	SAE "B" 2 Bolt
L	Wheel, Front Brake
M	Magneto
U	Wheel, Standard
W*	Wheel, Optional
D*	Large Wheel Mount
V*	SAE "A" 4 Bolt

*Requires rear porting

XX

Ports
Anschluß
Plan de raccordement
Lumbreras

Code	Ports
A	7/8-14 SAE O-Ring; Rear Axial
B	7/8-14 SAE O-Ring; Rear Radial
E	Manifold; Rear Radial
H	ISO 6149 M22 x 1.5
M*	5/16-18 UNC Manifold
S	7/8-14 SAE

*Not available on L, U or W mounting.

* Requires rear porting.
Nur Endanschluss moglich
Exige des orifices en arriere
Necesita lumbrera posterior

* Abtriebswelle	Ø 25mm	Max. Moment cont./int.	450/550 Nm
Coupling shaft	Ø 1 inch	Max. torque cont./int.	
Arbre	6B SAE	Couple maxi cont./int.	
Eje de acople		Coppia max cont./int.	

XX

Shaft
Welle
Arbre
Eje

Code	Shaft
01*	1" 6B Spline
02*	1" Keyed
03	1 1/4" Keyed
04	10B Spline
05	1 1/4" 14 Tooth Spline
06	19 Tooth Spline
07	15 Tooth Spline
08	1 1/4" Tapered
19	1 3/8" J501 Taper
20	1 3/8" Keyed

0

Rotation
Drehrichtung
Direction de rotation
Rotacion

Code	Rotation
0	Standard B A
1	Reverse Timed Manifold B A

Code	Rear Rotation
0	Standard
1	Reverse Timed Manifold

Rotation viewed from shaft end.

XXXX

Options
Opciones

Code	Options
AAAA	Black Paint
AAAB	No Paint
AAAC	Double Paint
AAAF***	Castle Nut, Black Paint
AABP***	Castle Nut, No Paint
AAAG	Viton Seals, Black Paint
AAAH	Viton Seals, No Paint
AAAJ	Vespel Commutator Seal, Black Paint
AAFG	Vespel Commutator Seal, No Paint
AAAT*	Bidirectional Shuttle (11:00**), Black Paint
AAFX*	Bidirectional Shuttle (11:00**), No Paint
AAAU*	Bidirectional Shuttle (11:00**), Castle Nut, Black Paint
AAGF*	Bidirectional Shuttle (11:00**), Castle Nut, No Paint
AABJ****	Free Running Rotorset, Black Paint
AABK****	Free Running Rotorset, No Paint
AABL****	Free Running Rotorset, No Commutator Seal, Black Paint
AABM****	Free Running Rotorset, No Commutator Seal, No Paint

* Not available with A, B or E porting
** Shuttle port position as viewed from shaft end of motor
*** Available only with shaft codes 08 & 19
**** Not available on 0625, 0785 or 0960 displacement codes

For other available options, see pages 257–258.

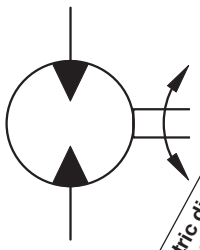

Motor Series TG	Geometric displacement / Geom. Schluckvolumen / Cylindrée / Cilindrata	Max. speed @ Max. intermittent flow / Max. Drehzahl Intermittierender Betrieb: / Vitesse de rotation maxi / Velocidad maxima a caudal intermitente maximo	Max. oil flow / Max. Schluckstrom / Débit d'huile maxi / Portata max		Max. differential pressure / Max. Druckgefälle / Chute de pression maxi / Presion diferencial maxima		Max. supply pressure / Max. Eingangsdruck / Pression maxi entrée / Presion maxima de alimentacion		Max. torque / Max. Drehmoment / Couple maxi / Torque Maximo		Max. performance / Max. Leistungabgabe / Puissance de sortie maxi / Potenza meccanica max		Min. starting torque / Min. Anlaufmoment / Couple min. fourni au dé manrage / Torque minimo de arranque	
	cm³/rev in³/rev	rev/min	***cont / int**** **l/min** g/min		***cont / int**** **bar** psid		***max*** **bar** psig	***cont / int**** **Nm** lb-in		***max*** **KW** HP	***cont / int**** **Nm** lb-in	
TG 0140	**141** 8.6	660	**76** 20	**95** 25	**207** 3000	**276** 4000	**300** 4350	**390** 3455	**530** 4692	**33** 45	**315** 2791	**418** 3706
TG 0170	**169** 10.3	554	**76** 20	**95** 25	**207** 3000	**276** 4000	**300** 4350	**476** 4216	**646** 5714	**33** 45	**376** 3331	**505** 4469
TG 0195	**195** 11.9	477	**76** 20	**95** 25	**207** 3000	**276** 4000	**300** 4350	**556** 4919	**753** 6663	**33** 45	**451** 3989	**611** 5408
TG 0240	**238** 14.5	393	**76** 20	**95** 25	**207** 3000	**276** 4000	**300** 4350	**677** 5991	**913** 8081	**32** 44	**582** 5152	**776** 6865
TG 0280	**280** 17.1	334	**76** 20	**95** 25	**207** 3000	**276** 4000	**300** 4350	**796** 7044	**1073** 9499	**31** 42	**675** 5972	**870** 7699
TG 0310	**310** 18.9	303	**76** 20	**95** 25	**207** 3000	**276** 4000	**300** 4350	**924** 8184	**1229** 10817	**31** 41	**778** 6882	**1005** 8893
TG 0335	**337** 20.6	277	**76** 20	**95** 25	**207** 3000	**276** 4000	**300** 4350	**964** 8533	**1297** 11479	**30** 41	**843** 7458	**1117** 9889
TG 0405	**405** 24.7	232	**76** 20	**95** 25	**172** 2500	**241** 3500	**300** 4350	**942** 8336	**1342** 11877	**27** 37	**791** 7002	**1145** 10133
TG 0475	**477** 29.1	237	**76** 20	**114** 30	**138** 2000	**207** 3000	**300** 4350	**887** 7853	**1372** 12145	**28** 38	**740** 6549	**1120** 9909
TG 0530	**528** 32.3	213	**76** 20	**114** 30	**138** 2000	**172** 2500	**300** 4350	**983** 8701	**1253** 11086	**23** 31	**874** 7737	**1091** 9657
TG 0625	**623** 38.0	182	**76** 20	**114** 30	**121** 1750	**155** 2250	**300** 4350	**986** 8727	**1291** 11424	**20** 27	**895** 7924	**1165** 10312
TG 0785	**786** 48.0	143	**76** 20	**114** 30	**103** 1500	**138** 2000	**300** 4350	**1044** 9239	**1428** 12636	**17** 23	**991** 8772	**1341** 11876
TG 0960	**959** 58.5	118	**76** 20	**114** 30	**69** 1000	**103** 1500	**300** 4350	**773** 6843	**1268** 11227	**12** 16	**763** 6752	**1177** 10419

Performance data based on testing using 10W40 oil with a viscosity of 200 SUS at 54° C (130° F.). Performance data is typical. Actual data may vary slightly from one production motor to another.

Les donnees sur les performances sont basees sur des tests utilisant de l'huile 10W40 d'une viscosite de 200 SUS a 54°C (130°F). Ces donnees correspondent a des situations typiques. Les donnees reelles peuvent varier legerement d'un moteur de production a l'autre.

Leistungsdaten sind gemessen mit SAE 10W40 bei einer Viskositaet von 43,1 Cst bei 54°C. Geringfuegige Abweichungen von den Katalogdaten sind moeglich.

Datos tecnicos obtenidos con aceite 10W40 de 200 SUS de viscosidad a 54°C (130°F). Los datos proporcionados son valores tipcos. Los valores exactos reales podrian tener una pequena variacion entre distintos motores.

* Intermittent operation rating applies to 10% of every minute.
Intermittierende Werte maximal 10% von jeder Betriebsminute.
Fonctionnement interm. 10% max. de chaque minute d`utilisation.
Capacidad de funcionamiento intermitente valida para 10% por cada minuto.

TG 0140

8.6 cu in / rev

PRESSURE (PSID)

Flow (GPM)	500	1000	1500	2000	2500	3000	3500	4000
.5	519 **9**	1060 **4**						
1	540 **22**	1090 **17**	1635 **11**	2180 **6**				
2	569 **49**	1156 **43**	1730 **36**	2286 **30**	2827 **23**	3368 **19**	3899 **12**	4447 **12**
3	565 **75**	1159 **69**	1744 **62**	2321 **55**	2899 **47**	3477 **40**	4048 **33**	4608 **29**
4	564 **102**	1170 **94**	1768 **87**	2358 **80**	2943 **72**	3517 **64**	4082 **57**	4644 **52**
5	556 **128**	1170 **120**	1776 **112**	2375 **105**	2968 **97**	3556 **89**	4135 **81**	4701 **76**
7	540 **182**	1160 **172**	1779 **164**	2390 **155**	2994 **146**	3592 **138**	4181 **130**	4763 **123**
9	515 **235**	1143 **225**	1768 **215**	2385 **206**	2996 **196**	3601 **187**	4199 **179**	4794 **171**
12	471 **315**	1096 **303**	1729 **292**	2356 **281**	2974 **271**	3587 **261**	4193 **252**	4794 **243**
15	418 **395**	1042 **381**	1673 **368**	2307 **357**	2933 **346**	3549 **336**	4163 **325**	4771 **314**
20	299 **528**	931 **512**	1565 **497**	2198 **484**	2825 **472**	3455 **459**	4078 **447**	4692 **435**
25	173 **660**	794 **643**	1426 **626**	2059 **612**	2695 **598**	3332 **583**	3961 **569**	4579 **555**

TORQUE (LB IN) 3961
SPEED (RPM) 569

141 cc / rev

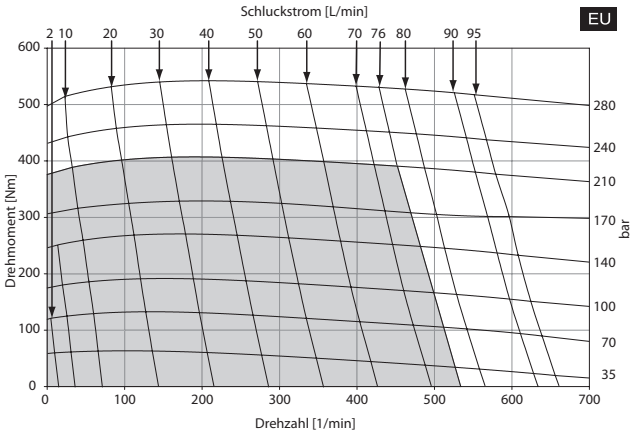

Cont. Int.

Intermittent operation rating applies to 10% of every minute.

Fonctionnement interm. 10% max. de chaque minute d`utilisation.

Performance data based on testing using 10W40 oil with a viscosity of 200 SUS at 54° C (130° F.). Performance data is typical. Actual data may vary slightly from one production motor to another.

Les donnees sur les performances sont basees sur des tests utilisant de l'huile 10W40 d'une viscosite de 200 SUS a 54°C (130°F). Ces donnees correspondent a des situations typiques. Les donnees reelles peuvent varier legerement d'un moteur de production a l'autre.

Intermittierende Werte maximal 10% von jeder Betriebsminute.

Capacidad de funcionamiento intermitente valida para 10% por cada minuto.

Leistungsdaten sind gemessen mit SAE 10W40 bei einer Viskositaet von 43,1 Cst bei 54ºC. Geringfuegige Abweichungen von den Katalogdaten sind moeglich.

Datos tecnicos obtenidos con aceite 10W40 de 200 SUS de viscosidad a 54°C (130°F). Los datos proporcionados son valores tipcos. Los valores exactos reales podrian tener una pequena variacion entre distintos motores.

TG 0170

10.3 cu in / rev

PRESSURE (PSID)

Flow (GPM)	500	1000	1500	2000	2500	3000	3500	4000
.5	620 **9**	1284 **7**	1945 **5**	2613 **4**	3293 **3**	3983 **2**		
1	652 **20**	1337 **18**	2006 **16**	2683 **14**	3375 **12**	4063 **11**	4744 **8**	5402 **8**
2	678 **42**	1390 **40**	2105 **37**	2822 **35**	3535 **32**	4226 **30**	4909 **27**	5587 **25**
3	678 **64**	1397 **61**	2117 **58**	2836 **56**	3554 **53**	4263 **50**	4963 **46**	5652 **44**
4	679 **86**	1409 **83**	2142 **80**	2872 **77**	3596 **74**	4310 **71**	5021 **67**	5716 **64**
5	675 **108**	1413 **104**	2150 **101**	2885 **98**	3616 **94**	4339 **91**	5057 **87**	5761 **83**
7	661 **153**	1405 **148**	2152 **143**	2900 **140**	3642 **136**	4374 **132**	5101 **127**	5818 **123**
9	632 **197**	1385 **191**	2140 **186**	2891 **181**	3638 **177**	4380 **173**	5114 **168**	5838 **163**
12	583 **263**	1334 **256**	2096 **250**	2860 **244**	3617 **239**	4362 **234**	5101 **228**	5823 **223**
15	524 **330**	1275 **322**	2035 **314**	2804 **308**	3572 **302**	4327 **296**	5070 **289**	5801 **283**
20	382 **442**	1143 **432**	1908 **422**	2683 **413**	3455 **406**	4216 **399**	4972 **391**	5714 **383**
25	239 **554**	983 **543**	1747 **531**	2523 **520**	3299 **511**	4071 **501**	4839 **492**	5591 **483**

TORQUE (LB IN) 4839
SPEED (RPM) 492

169 cc / rev

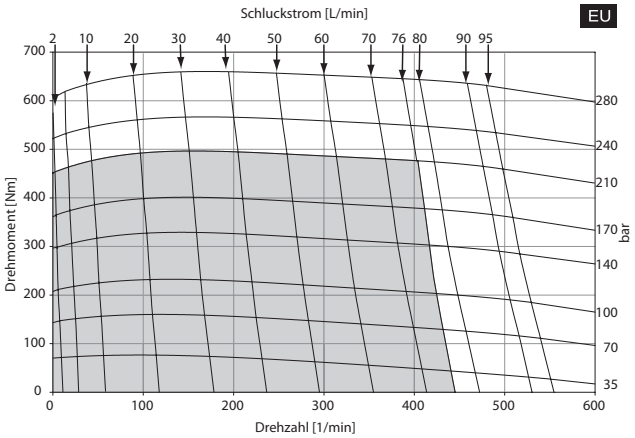

Cont. Int.

Intermittent operation rating applies to 10% of every minute.

Fonctionnement interm. 10% max. de chaque minute d`utilisation.

Performance data based on testing using 10W40 oil with a viscosity of 200 SUS at 54° C (130° F.). Performance data is typical. Actual data may vary slightly from one production motor to another.

Les donnees sur les performances sont basees sur des tests utilisant de l'huile 10W40 d'une viscosite de 200 SUS a 54°C (130°F). Ces donnees correspondent a des situations typiques. Les donnees reelles peuvent varier legerement d'un moteur de production a l'autre.

Intermittierende Werte maximal 10% von jeder Betriebsminute.

Capacidad de funcionamiento intermitente valida para 10% por cada minuto.

Leistungsdaten sind gemessen mit SAE 10W40 bei einer Viskositaet von 43,1 Cst bei 54ºC. Geringfuegige Abweichungen von den Katalogdaten sind moeglich.

Datos tecnicos obtenidos con aceite 10W40 de 200 SUS de viscosidad a 54°C (130°F). Los datos proporcionados son valores tipcos. Los valores exactos reales podrian tener una pequena variacion entre distintos motores.

TG 0195

11.9 cu in / rev

PRESSURE (PSID)

Flow (GPM)	500	1000	1500	2000	2500	3000	3500	4000
.5	733 **7**	1503 **3**						
1	761 **16**	1546 **13**	2326 **8**	3104 **3**				
2	799 **35**	1638 **32**	2465 **27**	3270 **21**	4046 **16**	4813 **11**	5589 **7**	6375 **6**
3	794 **55**	1639 **50**	2476 **45**	3303 **39**	4132 **34**	4970 **28**	5792 **23**	6595 **19**
4	794 **74**	1654 **69**	2509 **64**	3356 **58**	4196 **52**	5023 **46**	5830 **40**	6635 **35**
5	783 **93**	1653 **88**	2517 **83**	3375 **76**	4224 **70**	5065 **64**	5895 **58**	6710 **52**
7	762 **131**	1637 **126**	2514 **120**	3384 **113**	4245 **106**	5098 **99**	5940 **92**	6772 **86**
9	731 **170**	1616 **164**	2499 **157**	3373 **150**	4239 **142**	5093 **135**	5936 **127**	6774 **120**
12	677 **228**	1562 **221**	2455 **213**	3343 **205**	4217 **196**	5081 **188**	5934 **179**	6776 **172**
15	613 **285**	1498 **278**	2389 **269**	3283 **260**	4169 **251**	5040 **242**	5907 **232**	6765 **233**
20	448 **381**	1350 **373**	2245 **363**	3141 **353**	4031 **342**	4919 **331**	5798 **321**	6663 **310**
25	334 **477**	1158 **468**	2044 **457**	2941 **445**	3837 **433**	4729 **421**	5612 **409**	6500 **397**

TORQUE (LB IN) 5612
SPEED (RPM) 409

195 cc / rev

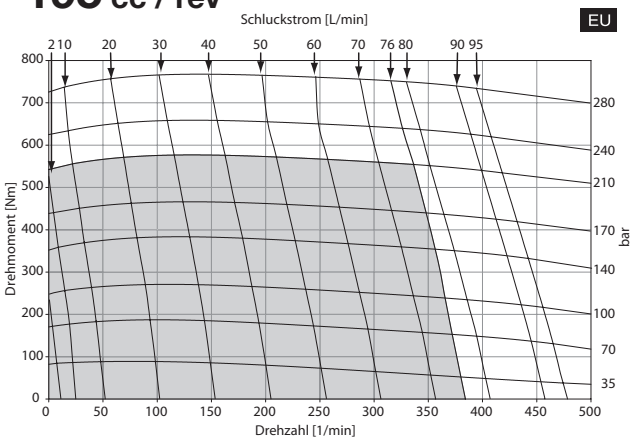

Cont. Int.

Intermittent operation rating applies to 10% of every minute.

Fonctionnement interm. 10% max. de chaque minute d`utilisation.

Performance data based on testing using 10W40 oil with a viscosity of 200 SUS at 54° C (130° F.). Performance data is typical. Actual data may vary slightly from one production motor to another.

Les donnees sur les performances sont basees sur des tests utilisant de l'huile 10W40 d'une viscosite de 200 SUS a 54°C (130°F). Ces donnees correspondent a des situations typiques. Les donnees reelles peuvent varier legerement d'un moteur de production a l'autre.

Intermittierende Werte maximal 10% von jeder Betriebsminute.

Capacidad de funcionamiento intermitente valida para 10% por cada minuto.

Leistungsdaten sind gemessen mit SAE 10W40 bei einer Viskositaet von 43,1 Cst bei 54ºC. Geringfuegige Abweichungen von den Katalogdaten sind moeglich.

Datos tecnicos obtenidos con aceite 10W40 de 200 SUS de viscosidad a 54°C (130°F). Los datos proporcionados son valores tipcos. Los valores exactos reales podrian tener una pequena variacion entre distintos motores.

TG 0240

14.5 cu in / rev

PRESSURE (PSID)

	500	1000	1500	2000	2500	3000	3500	4000
.5	932 **6**	1907 **4**	2894 **2**					
1	960 **14**	1954 **12**	2950 **9**	3943 **6**	4939 **3**	5930 **2**		
2	988 **30**	2031 **27**	3065 **24**	4090 **20**	5107 **17**	6100 **14**	7068 **11**	8037 **9**
3	983 **45**	2029 **42**	3071 **39**	4101 **35**	5128 **31**	6161 **27**	7182 **23**	8184 **20**
4	978 **61**	2037 **58**	3090 **54**	4136 **49**	5176 **45**	6207 **42**	7230 **37**	8234 **33**
5	962 **77**	2030 **73**	3092 **69**	4144 **64**	5190 **60**	6231 **56**	7259 **51**	8271 **47**
7	933 **108**	2005 **104**	3078 **99**	4141 **94**	5194 **89**	6239 **84**	7275 **78**	8298 **73**
9	890 **140**	1972 **135**	3048 **129**	4112 **123**	5169 **117**	6213 **112**	7245 **106**	8271 **100**
12	832 **187**	1912 **181**	2996 **175**	4071 **167**	5125 **161**	6163 **154**	7195 **147**	8224 **140**
15	753 **235**	1832 **228**	2921 **220**	4009 **212**	5081 **204**	6137 **196**	7182 **188**	8212 **180**
20	559 **314**	1654 **306**	2744 **297**	3834 **287**	4917 **278**	5991 **268**	7045 **258**	8081 **248**
25	524 **393**	1427 **384**	2507 **373**	3595 **363**	4690 **352**	5780 **340**	6853 **328**	7913 **317**

Flow (GPM)

238 cc / rev

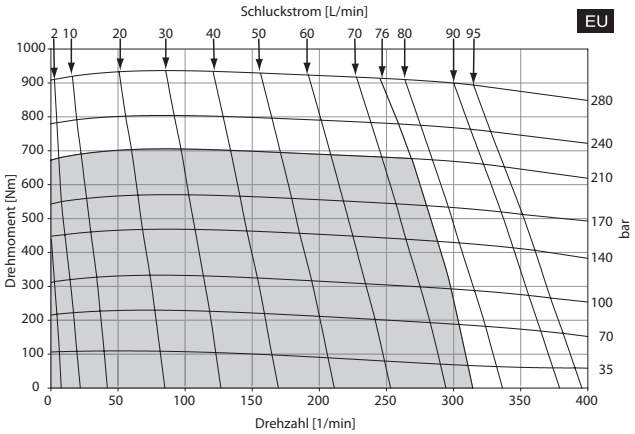

Cont. Int.

Intermittent operation rating applies to 10% of every minute.

Fonctionnement interm. 10% max. de chaque minute d`utilisation.

Performance data based on testing using 10W40 oil with a viscosity of 200 SUS at 54° C (130° F.). Performance data is typical. Actual data may vary slightly from one production motor to another.

Les donnees sur les performances sont basees sur des tests utilisant de l'huile 10W40 d'une viscosite de 200 SUS a 54°C (130°F). Ces donnees correspondent a des situations typiques. Les donnees reelles peuvent varier legerement d'un moteur de production a l'autre.

Intermittierende Werte maximal 10% von jeder Betriebsminute.

Capacidad de funcionamiento intermitente valida para 10% por cada minuto.

Leistungsdaten sind gemessen mit SAE 10W40 bei einer Viskositaet von 43,1 Cst bei 54ºC. Geringfuegige Abweichungen von den Katalogdaten sind moeglich.

Datos tecnicos obtenidos con aceite 10W40 de 200 SUS de viscosidad a 54°C (130°F). Los datos proporcionados son valores tipcos. Los valores exactos reales podrian tener una pequena variacion entre distintos motores.

TG 0280

17.1 cu in / rev

PRESSURE (PSID)

Flow (GPM)	500	1000	1500	2000	2500	3000	3500	4000
.5	1056 **5**	2177 **4**	3323 **2**	4512 **1**				
1	1087 **12**	2223 **10**	3378 **8**	4552 **6**	5734 **5**	6930 **3**	8135 **3**	9350 **2**
2	1124 **25**	2313 **23**	3513 **21**	4700 **18**	5880 **16**	7060 **14**	8239 **12**	9400 **11**
3	1124 **39**	2323 **36**	3532 **34**	4740 **31**	5940 **28**	7143 **25**	8346 **22**	9536 **19**
4	1126 **52**	2346 **49**	3568 **47**	4786 **43**	6004 **40**	7214 **37**	8415 **33**	9596 **30**
5	1115 **65**	2350 **62**	3582 **59**	4816 **56**	6044 **52**	7256 **49**	8457 **45**	9641 **41**
7	1091 **92**	2338 **88**	3586 **85**	4832 **80**	6072 **76**	7301 **72**	8515 **67**	9706 **63**
9	1046 **118**	2309 **114**	3564 **110**	4811 **105**	6051 **101**	7280 **96**	8499 **90**	9707 **85**
12	981 **159**	2242 **154**	3506 **148**	4757 **143**	5992 **137**	7221 **132**	8444 **125**	9652 **118**
15	898 **199**	2164 **193**	3437 **186**	4702 **180**	5951 **174**	7187 **168**	8416 **160**	9625 **152**
20	691 **266**	1976 **258**	3255 **250**	4529 **243**	5795 **235**	7044 **227**	8275 **218**	9499 **209**
25	703 **334**	1726 **324**	2987 **314**	4260 **305**	5540 **296**	6815 **286**	8071 **276**	9311 **267**

TORQUE (LB IN) 8071
SPEED (RPM) 276

280 cc / rev

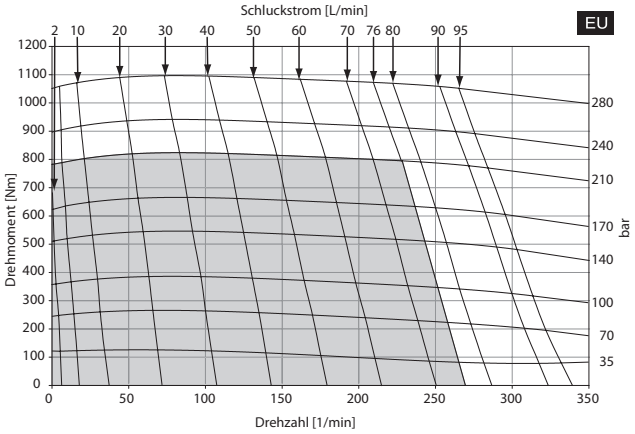

Cont. Int.

Intermittent operation rating applies to 10% of every minute.

Fonctionnement interm. 10% max. de chaque minute d`utilisation.

Performance data based on testing using 10W40 oil with a viscosity of 200 SUS at 54° C (130° F.). Performance data is typical. Actual data may vary slightly from one production motor to another.

Les donnees sur les performances sont basees sur des tests utilisant de l'huile 10W40 d'une viscosite de 200 SUS a 54°C (130°F). Ces donnees correspondent a des situations typiques. Les donnees reelles peuvent varier legerement d'un moteur de production a l'autre.

Intermittierende Werte maximal 10% von jeder Betriebsminute.

Capacidad de funcionamiento intermitente valida para 10% por cada minuto.

Leistungsdaten sind gemessen mit SAE 10W40 bei einer Viskositaet von 43,1 Cst bei 54ºC. Geringfuegige Abweichungen von den Katalogdaten sind moeglich.

Datos tecnicos obtenidos con aceite 10W40 de 200 SUS de viscosidad a 54°C (130°F). Los datos proporcionados son valores tipcos. Los valores exactos reales podrian tener una pequena variacion entre distintos motores.

012 TG.indd, js

Parker Hannifin Corporation
Hydraulic Pump/Motor Division
Greeneville, Tennessee, USA

TG 0310

18.9 cu in / rev

PRESSURE (PSID)

Flow (GPM)	500	1000	1500	2000	2500	3000	3500	4000
.5	1188 **4**	2464 **3**	3766 **2**	5102 **1**				
1	1220 **11**	2508 **9**	3812 **7**	5145 **5**	6477 **4**	7822 **2**	9181 **2**	10530 **1**
2	1259 **23**	2598 **21**	3950 **19**	5298 **17**	6642 **14**	7972 **13**	9282 **10**	10574 **9**
3	1257 **35**	2606 **33**	3889 **30**	5332 **28**	6688 **25**	8044 **22**	9392 **19**	10693 **16**
4	1259 **47**	2628 **44**	4003 **42**	5377 **39**	6749 **36**	8114 **33**	9461 **29**	10780 **26**
5	1247 **59**	2629 **56**	4252 **52**	5401 **50**	6782 **47**	8149 **42**	9499 **39**	10823 **35**
7	1218 **84**	2614 **80**	4013 **76**	5413 **72**	6806 **68**	8184 **64**	9543 **60**	10874 **56**
9	1167 **107**	2574 **103**	3983 **99**	5386 **94**	6780 **90**	8162 **85**	9529 **80**	10877 **75**
12	1089 **143**	2493 **139**	3904 **133**	5308 **128**	6696 **122**	8075 **117**	9443 **110**	10793 **102**
15	995 **180**	2400 **173**	3817 **167**	5225 **160**	6621 **154**	8003 **148**	9371 **140**	10718 **131**
20	769 **241**	2194 **234**	3618 **225**	5043 **218**	6462 **210**	7863 **203**	9238 **194**	10588 **183**
25	626 **303**	1955 **294**	3359 **284**	4771 **274**	6251 **265**	7608 **256**	8998 **246**	10360 **236**

TORQUE (LB IN) 7608
SPEED (RPM) 256

310 cc / rev

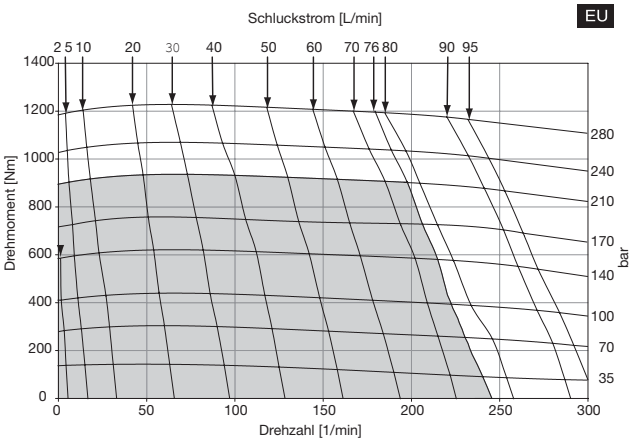

Cont. Int.

Intermittent operation rating applies to 10% of every minute.

Fonctionnement interm. 10% max. de chaque minute d`utilisation.

Performance data based on testing using 10W40 oil with a viscosity of 200 SUS at 54° C (130° F.). Performance data is typical. Actual data may vary slightly from one production motor to another.

Les donnees sur les performances sont basees sur des tests utilisant de l'huile 10W40 d'une viscosite de 200 SUS a 54°C (130°F). Ces donnees correspondent a des situations typiques. Les donnees reelles peuvent varier legerement d'un moteur de production a l'autre.

Intermittierende Werte maximal 10% von jeder Betriebsminute.

Capacidad de funcionamiento intermitente valida para 10% por cada minuto.

Leistungsdaten sind gemessen mit SAE 10W40 bei einer Viskositaet von 43,1 Cst bei 54ºC. Geringfuegige Abweichungen von den Katalogdaten sind moeglich.

Datos tecnicos obtenidos con aceite 10W40 de 200 SUS de viscosidad a 54°C (130°F). Los datos proporcionados son valores tipcos. Los valores exactos reales podrian tener una pequena variacion entre distintos motores.

TG 0335

20.6 cu in / rev

PRESSURE (PSID)

Flow (GPM)	500	1000	1500	2000	2500	3000	3500	4000
.5	1297 **4**	2699 **3**	4128 **1**	5584 **1**				
1	1329 **10**	2741 **8**	4176 **7**	5630 **5**	7084 **4**	8551 **2**	10036 **2**	11496 **1**
2	1369 **21**	2832 **19**	4308 **17**	5787 **15**	7265 **13**	8718 **11**	10136 **9**	11534 **8**
3	1366 **32**	2838 **30**	4326 **27**	5817 **25**	7301 **22**	8781 **20**	10248 **17**	11685 **14**
4	1368 **43**	2858 **40**	4358 **38**	5861 **35**	7358 **32**	8850 **29**	10317 **25**	11748 **22**
5	1355 **54**	2858 **51**	4368 **48**	5880 **45**	7386 **42**	8880 **38**	10352 **34**	11791 **30**
7	1323 **76**	2840 **73**	4363 **69**	5888 **65**	7407 **61**	8908 **57**	10384 **53**	11829 **47**
9	1266 **98**	2791 **94**	4326 **90**	5856 **85**	7376 **81**	8884 **76**	10372 **71**	11834 **64**
12	1177 **131**	2698 **127**	4230 **121**	5759 **116**	7273 **110**	8773 **105**	10261 **98**	11726 **90**
15	1075 **165**	2594 **159**	4127 **153**	5654 **146**	7170 **140**	8670 **134**	10153 **126**	11613 **116**
20	833 **221**	2372 **214**	3915 **205**	5463 **197**	7008 **189**	8533 **182**	10026 **173**	11479 **161**
25	678 **277**	2142 **269**	3663 **259**	5189 **248**	6726 **239**	8257 **230**	9757 **219**	11219 **209**

TORQUE (LB IN) 8257
SPEED (RPM) 230

337 cc / rev

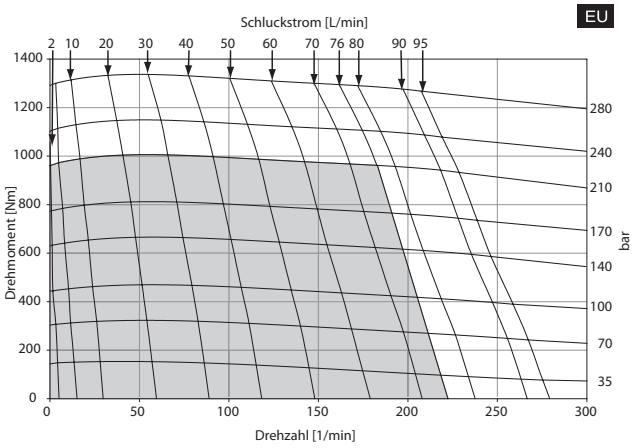

Cont. Int.

Intermittent operation rating applies to 10% of every minute.

Fonctionnement interm. 10% max. de chaque minute d`utilisation.

Performance data based on testing using 10W40 oil with a viscosity of 200 SUS at 54° C (130° F.). Performance data is typical. Actual data may vary slightly from one production motor to another.

Les donnees sur les performances sont basees sur des tests utilisant de l'huile 10W40 d'une viscosite de 200 SUS a 54°C (130°F). Ces donnees correspondent a des situations typiques. Les donnees reelles peuvent varier legerement d'un moteur de production a l'autre.

Intermittierende Werte maximal 10% von jeder Betriebsminute.

Capacidad de funcionamiento intermitente valida para 10% por cada minuto.

Leistungsdaten sind gemessen mit SAE 10W40 bei einer Viskositaet von 43,1 Cst bei 54ºC. Geringfuegige Abweichungen von den Katalogdaten sind moeglich.

Datos tecnicos obtenidos con aceite 10W40 de 200 SUS de viscosidad a 54°C (130°F). Los datos proporcionados son valores tipcos. Los valores exactos reales podrian tener una pequena variacion entre distintos motores.

TG 0405

24.7 cu in / rev

PRESSURE (PSID)

Flow (GPM)	500	1000	1500	2000	2500	3000	3500
.5	1544 **4**	3178 **3**	4840 **2**	6515 **1**	8185 **1**		
1	1593 **8**	3256 **7**	4928 **6**	6607 **6**	8303 **5**	9987 **4**	11652 **3**
2	1636 **17**	3351 **16**	5084 **15**	6817 **14**	8550 **13**	10272 **12**	11978 **11**
3	1637 **27**	3365 **25**	5106 **23**	6847 **22**	8588 **21**	10314 **19**	12031 **18**
4	1645 **36**	3394 **34**	5159 **32**	6920 **30**	8668 **29**	10402 **27**	12130 **26**
5	1640 **45**	3408 **43**	5201 **41**	6983 **39**	8733 **37**	10466 **35**	12194 **33**
7	1606 **64**	3396 **61**	5211 **59**	7003 **56**	8772 **54**	10527 **51**	12271 **49**
9	1551 **82**	3350 **80**	5176 **77**	6981 **73**	8763 **70**	10519 **67**	12269 **64**
12	1428 **110**	3238 **107**	5075 **103**	6888 **99**	8670 **95**	10424 **91**	12172 **88**
15	1310 **138**	3112 **135**	4948 **130**	6759 **125**	8545 **120**	10306 **115**	12060 **111**
20	1136 **185**	2862 **181**	4692 **175**	6518 **168**	8336 **162**	10122 **156**	11877 **151**
25			4492 **219**	6303 **212**	8084 **204**	9848 **197**	11585 **190**

TORQUE (LB IN) 9848
SPEED (RPM) 197

405 cc / rev

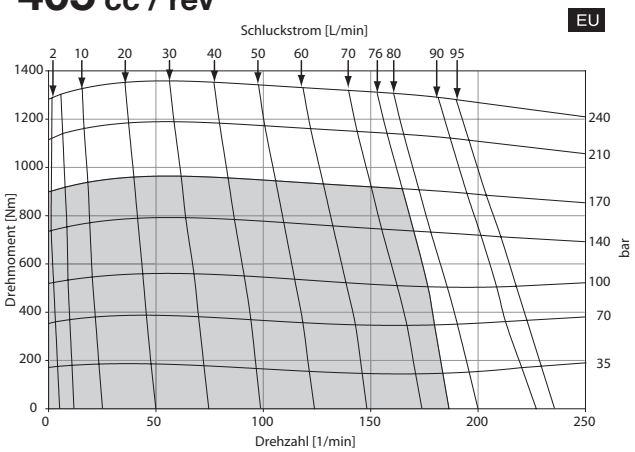

Cont. Int.

Intermittent operation rating applies to 10% of every minute.

Fonctionnement interm. 10% max. de chaque minute d`utilisation.

Performance data based on testing using 10W40 oil with a viscosity of 200 SUS at 54° C (130° F.). Performance data is typical. Actual data may vary slightly from one production motor to another.

Les donnees sur les performances sont basees sur des tests utilisant de l'huile 10W40 d'une viscosite de 200 SUS a 54°C (130°F). Ces donnees correspondent a des situations typiques. Les donnees reelles peuvent varier legerement d'un moteur de production a l'autre.

Intermittierende Werte maximal 10% von jeder Betriebsminute.

Capacidad de funcionamiento intermitente valida para 10% por cada minuto.

Leistungsdaten sind gemessen mit SAE 10W40 bei einer Viskositaet von 43,1 Cst bei 54ºC. Geringfuegige Abweichungen von den Katalogdaten sind moeglich.

Datos tecnicos obtenidos con aceite 10W40 de 200 SUS de viscosidad a 54°C (130°F). Los datos proporcionados son valores tipcos. Los valores exactos reales podrian tener una pequena variacion entre distintos motores.

TG 0475

29.1 cu in / rev

PRESSURE (PSID)

Flow (GPM)	500	1000	1500	2000	2500	3000
.5	1768 **3**	3732 **3**	5733 **2**	7744 **1**	9762 **1**	
1	1868 **7**	3878 **7**	5879 **6**	7851 **5**	9838 **4**	11830 **3**
2	1964 **15**	4055 **14**	6180 **14**	8237 **12**	10241 **10**	12136 **8**
3	1972 **23**	4074 **22**	6208 **21**	8321 **19**	10379 **17**	12355 **13**
4	2005 **31**	4135 **30**	6287 **29**	8382 **27**	10463 **24**	12496 **20**
5	2004 **39**	4129 **38**	6304 **37**	8428 **34**	10514 **31**	12544 **26**
7	1990 **55**	4133 **54**	6308 **52**	8445 **50**	10555 **45**	12602 **40**
9	1924 **70**	4104 **69**	6285 **68**	8430 **65**	10528 **60**	12608 **54**
12	1775 **94**	3974 **93**	6157 **91**	8328 **87**	10446 **82**	12528 **75**
15	1619 **118**	3784 **116**	5990 **114**	8188 **110**	10311 **104**	12372 **96**
20	1314 **157**	3373 **156**	5629 **153**	7853 **149**	10038 **141**	12145 **132**
25	1141 **197**	3029 **196**	5220 **193**	7427 **189**	9629 **182**	11757 **174**
30	606 **237**	2505 **236**	4649 **233**	6766 **230**	8878 **224**	10989 **219**

TORQUE (LB IN) 6766
SPEED (RPM) 230

477 cc / rev

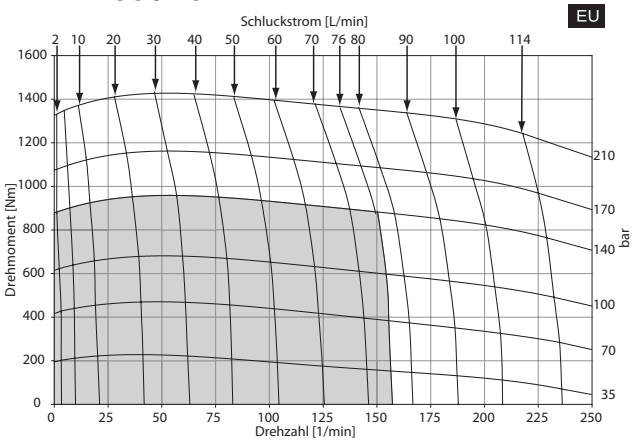

Cont. Int.

Intermittent operation rating applies to 10% of every minute.

Fonctionnement interm. 10% max. de chaque minute d`utilisation.

Performance data based on testing using 10W40 oil with a viscosity of 200 SUS at 54° C (130° F.). Performance data is typical. Actual data may vary slightly from one production motor to another.

Les donnees sur les performances sont basees sur des tests utilisant de l'huile 10W40 d'une viscosite de 200 SUS a 54°C (130°F). Ces donnees correspondent a des situations typiques. Les donnees reelles peuvent varier legerement d'un moteur de production a l'autre.

Intermittierende Werte maximal 10% von jeder Betriebsminute.

Capacidad de funcionamiento intermitente valida para 10% por cada minuto.

Leistungsdaten sind gemessen mit SAE 10W40 bei einer Viskositaet von 43,1 Cst bei 54ºC. Geringfuegige Abweichungen von den Katalogdaten sind moeglich.

Datos tecnicos obtenidos con aceite 10W40 de 200 SUS de viscosidad a 54°C (130°F). Los datos proporcionados son valores tipcos. Los valores exactos reales podrian tener una pequena variacion entre distintos motores.

TG 0530

32.2 cu in / rev

PRESSURE (PSID)

Flow (GPM)	500	1000	1500	2000	2500
.5	2080 **3**	4256 **3**	6479 **2**	8726 **2**	11012 **1**
1	2158 **7**	4372 **6**	6592 **6**	8779 **5**	10994 **4**
2	2246 **14**	4567 **13**	6869 **12**	9126 **11**	11376 **9**
3	2242 **21**	4578 **20**	6916 **19**	9237 **17**	11500 **14**
4	2253 **28**	4625 **27**	6977 **25**	9296 **23**	11586 **20**
5	2235 **35**	4629 **34**	7002 **32**	9333 **29**	11626 **26**
7	2182 **49**	4599 **48**	7006 **46**	9362 **42**	11659 **38**
9	2095 **63**	4535 **62**	6960 **59**	9330 **55**	11650 **50**
12	1943 **85**	4390 **83**	6825 **80**	9217 **75**	11549 **69**
15	1753 **106**	4199 **104**	6638 **100**	9052 **95**	11408 **87**
20	1327 **141**	3783 **139**	6262 **135**	8701 **129**	11086 **120**
25	1011 **177**	3300 **175**	5751 **171**	8210 **165**	10639 **158**
30	269 **213**	2698 **211**	5083 **208**	7415 **203**	9814 **197**

TORQUE (LB IN) 9814
SPEED (RPM) 197

528 cc / rev

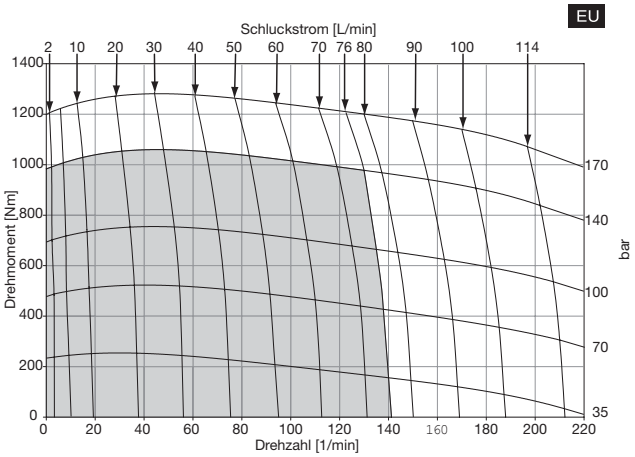

Cont. Int.

Intermittent operation rating applies to 10% of every minute.

Fonctionnement interm. 10% max. de chaque minute d`utilisation.

Performance data based on testing using 10W40 oil with a viscosity of 200 SUS at 54° C (130° F.). Performance data is typical. Actual data may vary slightly from one production motor to another.

Les donnees sur les performances sont basees sur des tests utilisant de l'huile 10W40 d'une viscosite de 200 SUS a 54°C (130°F). Ces donnees correspondent a des situations typiques. Les donnees reelles peuvent varier legerement d'un moteur de production a l'autre.

Intermittierende Werte maximal 10% von jeder Betriebsminute.

Capacidad de funcionamiento intermitente valida para 10% por cada minuto.

Leistungsdaten sind gemessen mit SAE 10W40 bei einer Viskositaet von 43,1 Cst bei 54ºC. Geringfuegige Abweichungen von den Katalogdaten sind moeglich.

Datos tecnicos obtenidos con aceite 10W40 de 200 SUS de viscosidad a 54°C (130°F). Los datos proporcionados son valores tipcos. Los valores exactos reales podrian tener una pequena variacion entre distintos motores.

TG 0625

38.0 cu in / rev

PRESSURE (PSID)

Flow (GPM)	500	1000	1500	1750	2250
.5	1939 **2**	4593 **1**			
1	2087 **5**	4665 **3**	7283 **2**	8680 **2**	11579 **1**
2	2338 **11**	4991 **9**	7590 **8**	8853 **7**	11458 **5**
3	2386 **17**	5101 **15**	7753 **13**	9055 **12**	11689 **9**
4	2457 **23**	5202 **21**	7872 **19**	9174 **17**	11769 **14**
5	2479 **29**	5246 **27**	7943 **25**	9242 **23**	11821 **18**
7	2464 **41**	5273 **39**	7995 **36**	9306 **34**	11859 **28**
9	2401 **53**	5223 **51**	7993 **48**	9337 **45**	11935 **39**
12	2254 **71**	5092 **69**	7886 **65**	9239 **62**	11900 **54**
15	2052 **89**	4901 **87**	7721 **83**	9086 **80**	11763 **70**
20	1600 **120**	4490 **117**	7334 **112**	8725 **109**	11424 **98**
25	1063 **151**	3933 **148**	6818 **144**	8235 **140**	11021 **131**
30	359 **182**	3250 **180**	6074 **176**	7443 **172**	10179 **165**

TORQUE (LB IN) 7443
SPEED (RPM) 172

623 cc / rev

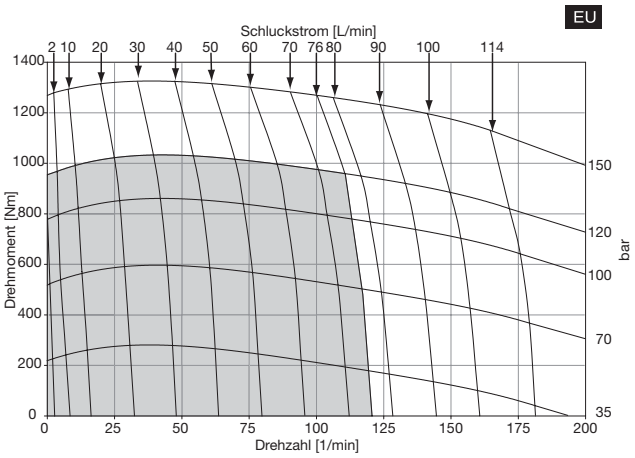

Cont. Int.

Intermittent operation rating applies to 10% of every minute.

Fonctionnement interm. 10% max. de chaque minute d`utilisation.

Performance data based on testing using 10W40 oil with a viscosity of 200 SUS at 54° C (130° F.). Performance data is typical. Actual data may vary slightly from one production motor to another.

Les donnees sur les performances sont basees sur des tests utilisant de l'huile 10W40 d'une viscosite de 200 SUS a 54°C (130°F). Ces donnees correspondent a des situations typiques. Les donnees reelles peuvent varier legerement d'un moteur de production a l'autre.

Intermittierende Werte maximal 10% von jeder Betriebsminute.

Capacidad de funcionamiento intermitente valida para 10% por cada minuto.

Leistungsdaten sind gemessen mit SAE 10W40 bei einer Viskositaet von 43,1 Cst bei 54ºC. Geringfuegige Abweichungen von den Katalogdaten sind moeglich.

Datos tecnicos obtenidos con aceite 10W40 de 200 SUS de viscosidad a 54°C (130°F). Los datos proporcionados son valores tipcos. Los valores exactos reales podrian tener una pequena variacion entre distintos motores.

TG 0785

48.0 cu in / rev

PRESSURE (PSID)

Flow (GPM)	500	1000	1500	2000
.5	2910 **2**	6153 **2**	9607 **1**	12950 **1**
1	3011 **4**	6296 **4**	9670 **3**	12919 **3**
2	3217 **9**	6536 **8**	9935 **7**	13060 **6**
3	3220 **14**	6613 **13**	9977 **11**	13079 **9**
4	3265 **19**	6679 **17**	10021 **15**	13078 **13**
5	3263 **23**	6703 **22**	10047 **19**	13103 **16**
7	3218 **33**	6722 **31**	10068 **28**	13062 **24**
9	3107 **43**	6664 **41**	10108 **36**	13185 **31**
12	2892 **57**	6489 **55**	9959 **49**	13082 **42**
15	2643 **71**	6238 **69**	9733 **62**	12938 **54**
20	2044 **95**	5673 **92**	9239 **85**	12636 **75**
25	2313 **119**	4976 **117**	8571 **110**	12073 **101**
30	496 **143**	4104 **141**	7582 **137**	11024 **130**

TORQUE (LB IN) 11024
SPEED (RPM) 130

786 cc / rev

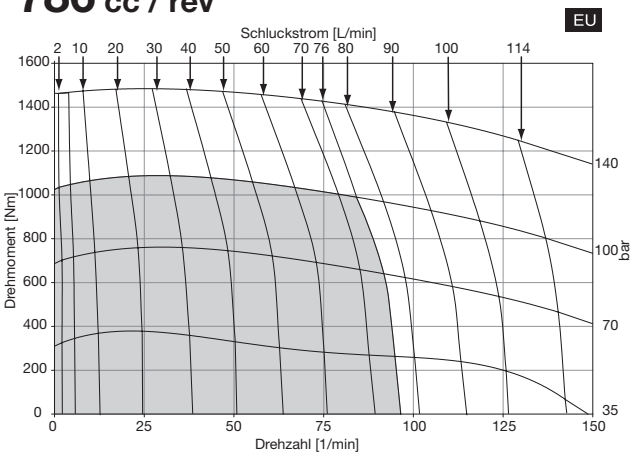

Cont. Int.

Intermittent operation rating applies to 10% of every minute.

Fonctionnement interm. 10% max. de chaque minute d`utilisation.

Performance data based on testing using 10W40 oil with a viscosity of 200 SUS at 54° C (130° F.). Performance data is typical. Actual data may vary slightly from one production motor to another.

Les donnees sur les performances sont basees sur des tests utilisant de l'huile 10W40 d'une viscosite de 200 SUS a 54°C (130°F). Ces donnees correspondent a des situations typiques. Les donnees reelles peuvent varier legerement d'un moteur de production a l'autre.

Intermittierende Werte maximal 10% von jeder Betriebsminute.

Capacidad de funcionamiento intermitente valida para 10% por cada minuto.

Leistungsdaten sind gemessen mit SAE 10W40 bei einer Viskositaet von 43,1 Cst bei 54ºC. Geringfuegige Abweichungen von den Katalogdaten sind moeglich.

Datos tecnicos obtenidos con aceite 10W40 de 200 SUS de viscosidad a 54°C (130°F). Los datos proporcionados son valores tipcos. Los valores exactos reales podrian tener una pequena variacion entre distintos motores.

TG 0960

58.5 cu in / rev

PRESSURE (PSID)

Flow (GPM)	500	1000	1500
.5	3692 **2**	7712 **1**	11750 **1**
1	3788 **3**	7858 **3**	11895 **3**
2	3900 **7**	8045 **7**	12058 **6**
3	3905 **11**	8078 **11**	12135 **10**
4	3939 **15**	8155 **14**	12210 **13**
5	3923 **19**	8173 **18**	12238 **17**
7	3860 **27**	8160 **26**	12262 **24**
9	3733 **35**	8074 **34**	12224 **31**
12	3475 **47**	7848 **45**	12062 **42**
15	3149 **58**	7545 **57**	11823 **53**
20	2437 **78**	6843 **76**	11227 **72**
25	2969 **98**	5990 **96**	10360 **92**
30	603 **118**	4919 **117**	9170 **113**

TORQUE (LB IN) 9170
SPEED (RPM) 113

959 cc / rev

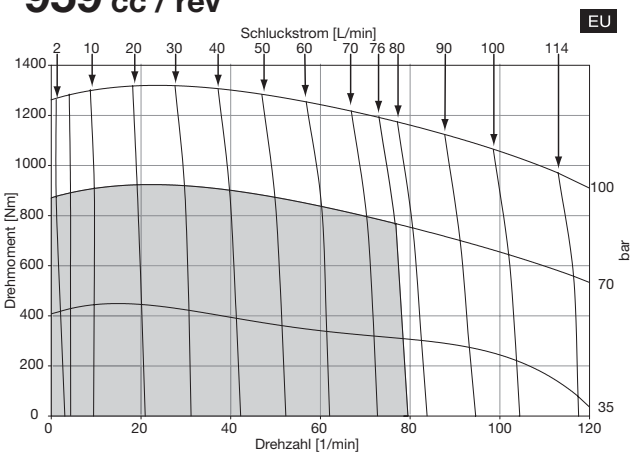

Cont. Int.

Intermittent operation rating applies to 10% of every minute.

Fonctionnement interm. 10% max. de chaque minute d`utilisation.

Performance data based on testing using 10W40 oil with a viscosity of 200 SUS at 54° C (130° F.). Performance data is typical. Actual data may vary slightly from one production motor to another.

Les donnees sur les performances sont basees sur des tests utilisant de l'huile 10W40 d'une viscosite de 200 SUS a 54°C (130°F). Ces donnees correspondent a des situations typiques. Les donnees reelles peuvent varier legerement d'un moteur de production a l'autre.

Intermittierende Werte maximal 10% von jeder Betriebsminute.

Capacidad de funcionamiento intermitente valida para 10% por cada minuto.

Leistungsdaten sind gemessen mit SAE 10W40 bei einer Viskositaet von 43,1 Cst bei 54ºC. Geringfuegige Abweichungen von den Katalogdaten sind moeglich.

Datos tecnicos obtenidos con aceite 10W40 de 200 SUS de viscosidad a 54°C (130°F). Los datos proporcionados son valores tipcos. Los valores exactos reales podrian tener una pequena variacion entre distintos motores.

Flange Mount / Standardgehäuse
Monture à bride(s) / Montaje de brida

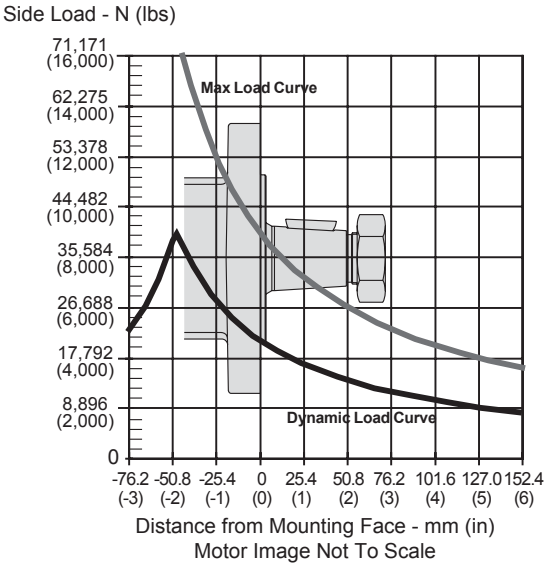

The dynamic side load curve is based on uni-directional steady state loads for L_{10} bearing life at 3 x 10^6 revolutions.
Die zulässige auslegbare radiale Wellenbelastungskurve ist unter ruhenden, einseitig statisch gerichteten Lastverhältnissen auf eine L_{10} Lebensdauer mit 3 x 10^6 Umdrehungen kalkuliert.
La courbe de charge latérale permise se base sur des charges unidirectionnelles en régime permanent pour le roulement L_{10} à 3 x 10^6 révolutions.
La curva de valores admisibles de carga lateral está basada en cargas constantes para cojinetes L_{10} a 3 x 10^6 revoluciones.

Wheel Mount / Radnabengehäuse
Monture à roue/ Montaje de rueda

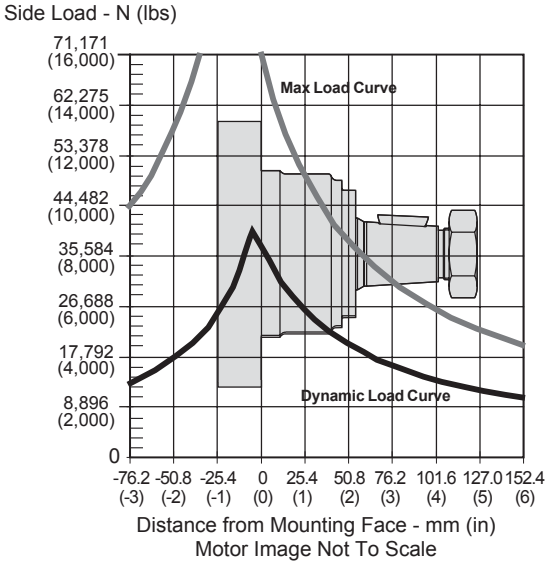

The maximum load curve is defined by bearing static load capacity. This curve should not be exceeded at any time including shock loads.
Die maximale radiale Wellenbelastungskurve ist definiert als maximale statische Last ohne Drehzahl. Sie gilt als Grenze und sollte keinesfalls überschritten werden.
La courbe de charge maximale est définie par la capacité de charge statique portante. Cette courbe ne devrait être dépassée en aucun moment y compris pour les charges par à-coups.
La curva de carga máxima queda definida por la capacidad de carga estática del cojinete. No se deben superar los valores de esta curva, ni siquiera con cargas provisorias de impacto.

Equation to Calculate the Expected Radial Bearing Life
Gleichung zur Ermittlung der Lagerlebensdauer

Equation to calculate the dynamic bearing life for a given load:
Bestimmung der erlaubten radialen Wellenbelastung mit vorgegebener Last

Use F_a, F_b and S in equation to determine hours of L_{10} bearing life.
Die Lebensdauer in Stunden ergibt sich durch einsetzen von F_a, F_b, und S in die nachstehende Formel.

$$L = \frac{3 \times 10^6}{60 \times S} \left\{ \frac{F_a}{F_b} \right\}^{3.33}$$

Where / Mit:

S = Shaft Speed RPM / Abtriebswellendrehzahl in min^{-1}
L = Life In Hours / Lebensdauer in Stunden
F_a = Dynamic side load defined by above curve at a distance from mounting flange. / Erlaubte radiale Wellenbelastung als Function der Laenge
F_b = Application side load. / Anwendungsseitige Wellenbelastung

Note: Calculations are based on L_{10} bearing life per ISO 281.
Auslegung basiert auf einer L_{10} Lenbendauer nach ISO 281.

Code: AM

SAE A 2-Bolt, 5/16-18 UNC Manifold

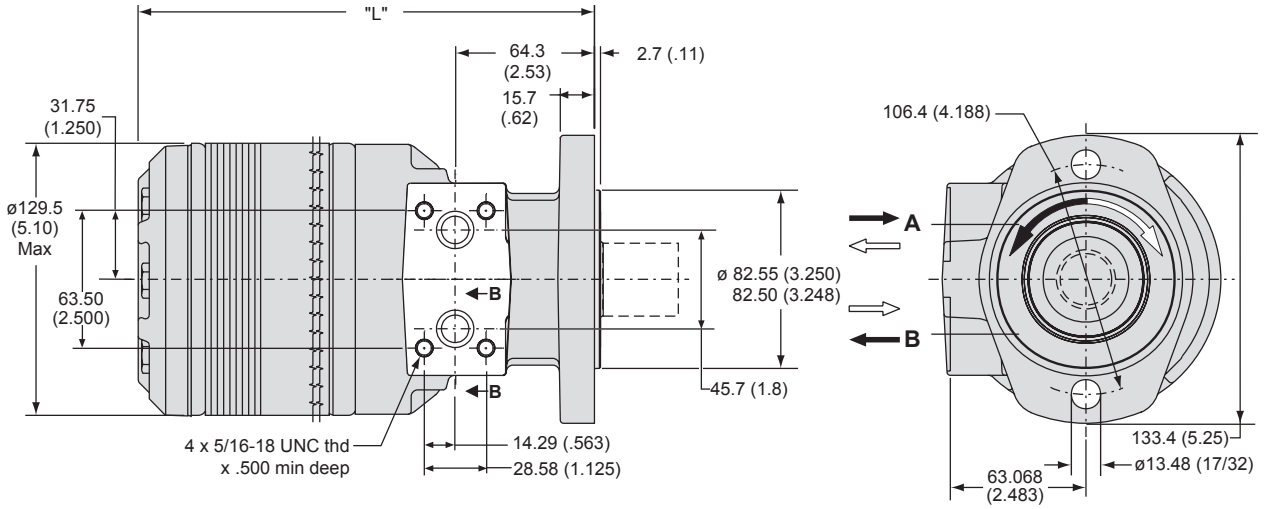

Code AM	disp.	0140	0170	0195	0240	0280	0310	0335	0405	0475	0530	0625	0785	0960
Weight/Gewicht	**kg**	**14.2**	**14.5**	**14.7**	**15.1**	**15.5**	**15.7**	**15.9**	**16.5**	**17.2**	**17.9**	**18.6**	**20.2**	**21.9**
Poids/Peso	(lb)	(31.4)	(32.0)	(32.5)	(33.3)	(34.2)	(34.7)	(35.1)	(36.4)	(37.9)	(39.5)	(41.1)	(44.5)	(48.3)
Length	**"L" mm**	**196**	**199**	**202**	**207**	**211**	**215**	**218**	**225**	**234**	**240**	**250**	**267**	**288**
	"L" (in)	(7.70)	(7.82)	(7.95)	(8.13)	(8.32)	(8.46)	(8.57)	(8.86)	(9.20)	(9.45)	(9.82)	(10.57)	(11.32)

Code: AS

SAE A 2-Bolt, 7/8-14 SAE

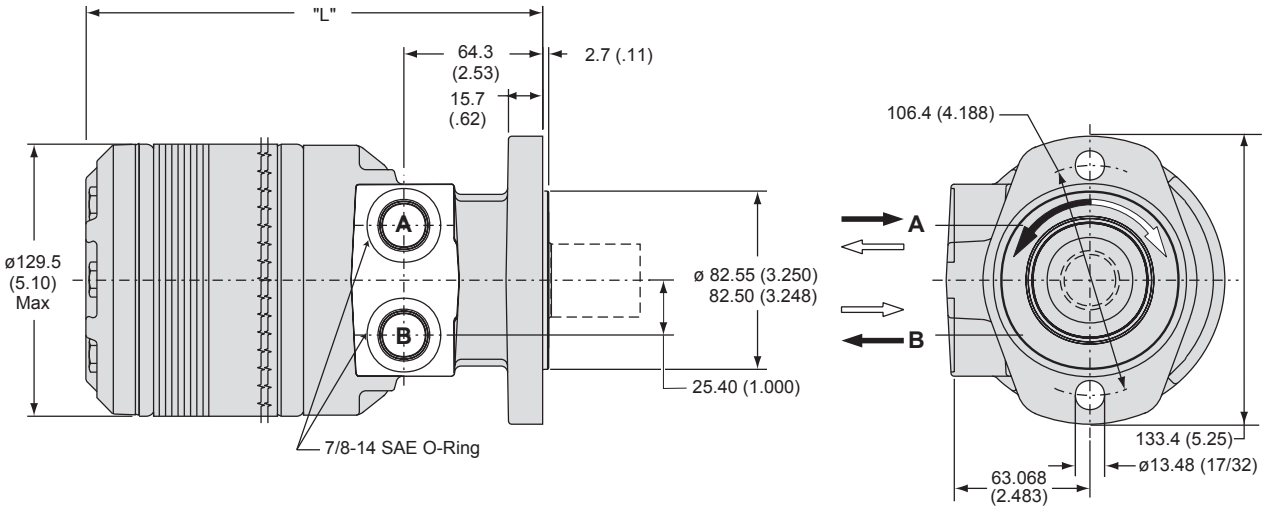

Code AS	disp.	0140	0170	0195	0240	0280	0310	0335	0405	0475	0530	0625	0785	0960
Weight/Gewicht	**kg**	**14.2**	**14.5**	**14.7**	**15.1**	**15.5**	**15.7**	**15.9**	**16.5**	**17.2**	**17.9**	**18.6**	**20.2**	**21.9**
Poids/Peso	(lb)	(31.4)	(32.0)	(32.5)	(33.3)	(34.2)	(34.7)	(35.1)	(36.4)	(37.9)	(39.5)	(41.1)	(44.5)	(48.3)
Length	**"L" mm**	**196**	**199**	**202**	**207**	**211**	**215**	**218**	**225**	**234**	**240**	**250**	**267**	**288**
	"L" (in)	(7.70)	(7.82)	(7.95)	(8.13)	(8.32)	(8.46)	(8.57)	(8.86)	(9.20)	(9.45)	(9.82)	(10.57)	(11.32)

English equivalents for metric specifications are shown in ( ).

Code: LS

Wheel, Front Brake Nose, 7/8-14 SAE

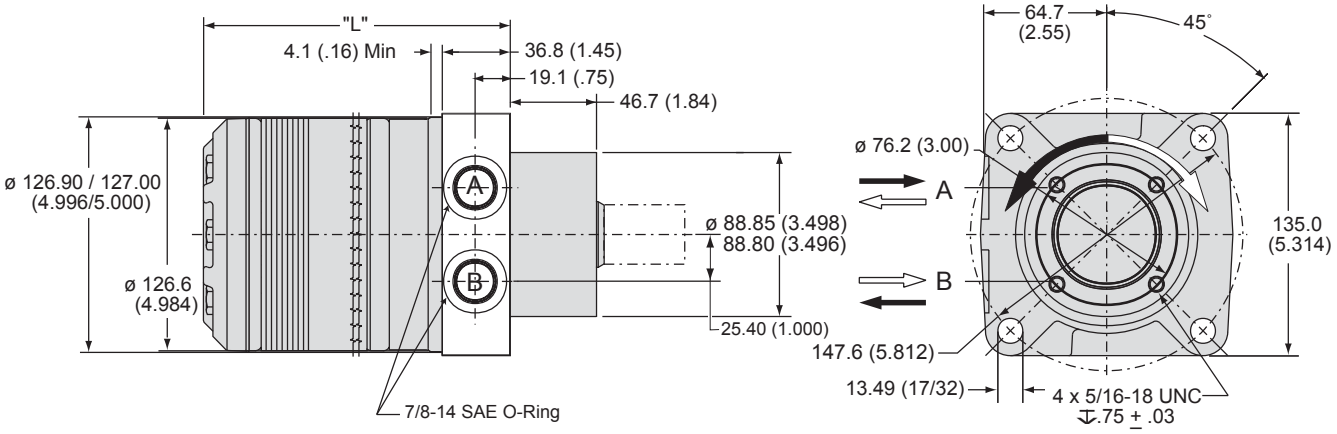

Code LS	disp.	0140	0170	0195	0240	0280	0310	0335	0405	0475	0530	0625	0785	0960
Weight/Gewicht	**kg**	**14.6**	**14.8**	**15.1**	**15.5**	**15.9**	**16.1**	**16.3**	**16.9**	**17.5**	**18.3**	**19.0**	**20.5**	**22.2**
Poids/Peso	(lb)	(32.2)	(37.7)	(33.3)	(34.1)	(35.0)	(35.5)	(35.8)	(37.2)	(38.6)	(40.3)	(41.8)	(45.3)	(49.0)
Length	**"L" mm**	**150**	**154**	**157**	**161**	**166**	**170**	**173**	**180**	**188**	**195**	**204**	**223**	**242**
	"L" (in)	(5.92)	(6.04)	(6.17)	(6.35)	(6.54)	(6.68)	(6.79)	(7.08)	(7.42)	(7.67)	(8.04)	(8.79)	(9.54)

Code: MS

Magneto, 7/8-14 SAE

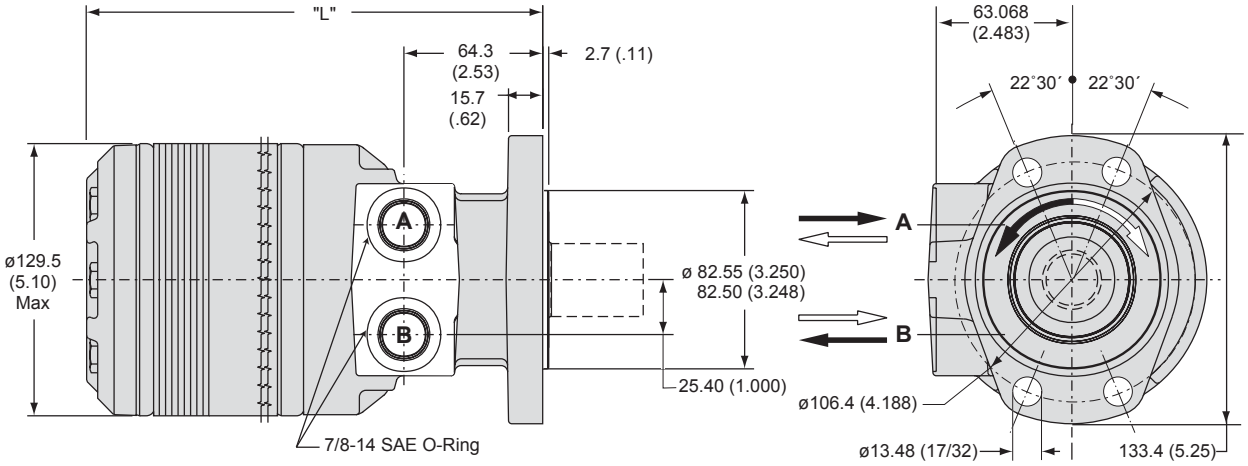

Code MS	disp.	0140	0170	0195	0240	0280	0310	0335	0405	0475	0530	0625	0785	0960
Weight/Gewicht	**kg**	**14.2**	**14.5**	**14.7**	**15.1**	**15.5**	**16.1**	**15.9**	**16.5**	**17.2**	**17.9**	**18.6**	**20.2**	**21.9**
Poids/Peso	(lb)	(31.4)	(32.0)	(32.5)	(33.3)	(34.2)	(35.5)	(35.1)	(36.4)	(37.9)	(39.5)	(41.1)	(44.5)	(48.3)
Length	**"L" mm**	**196**	**199**	**202**	**207**	**211**	**215**	**218**	**225**	**234**	**240**	**250**	**267**	**288**
	"L" (in)	(7.70)	(7.82)	(7.95)	(8.13)	(8.32)	(8.46)	(8.57)	(8.86)	(9.20)	(9.45)	(9.82)	(10.57)	(11.32)

English equivalents for metric specifications are shown in ( ).

012 TG.indd, js

Parker Hannifin Corporation
Hydraulic Pump/Motor Division
Greeneville, Tennessee, USA

Code: US

Wheel, Standard, 7/8-14 SAE

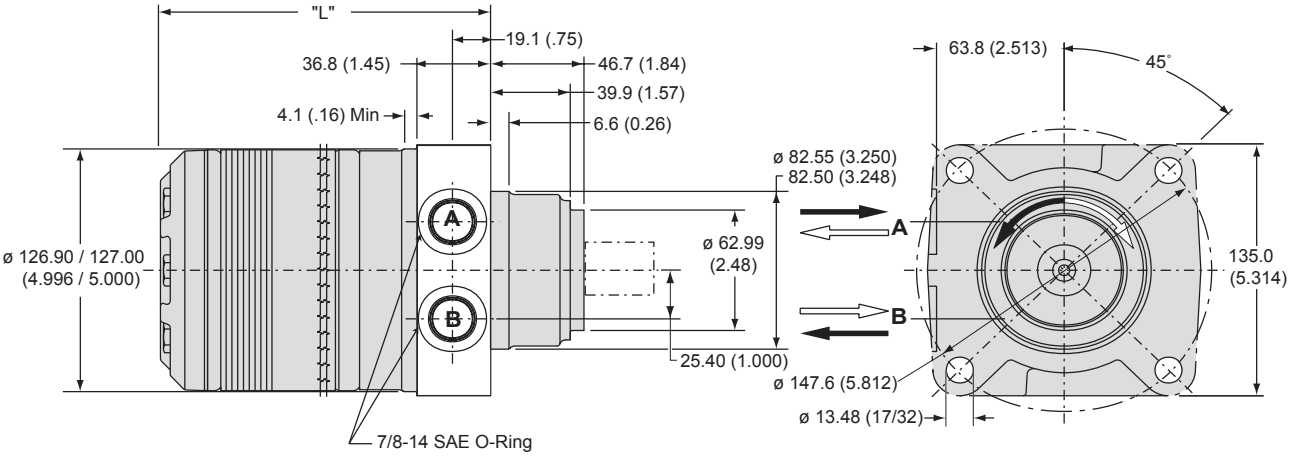

Code US	disp.	0140	0170	0195	0240	0280	0310	0335	0405	0475	0530	0625	0785	0960
Weight/Gewicht	**kg**	**14.6**	**14.8**	**15.1**	**15.5**	**15.9**	**16.1**	**16.3**	**16.9**	**17.5**	**18.3**	**19.0**	**20.5**	**22.2**
Poids/Peso	(lb)	(32.2)	(32.7)	(33.3)	(34.1)	(35.0)	(35.5)	(35.8)	(37.2)	(38.6)	(40.3)	(41.8)	(45.3)	(49.0)
Length	**"L" mm**	**150**	**154**	**157**	**161**	**166**	**170**	**173**	**180**	**188**	**195**	**204**	**223**	**242**
	"L" (in)	(5.92)	(6.04)	(6.17)	(6.35)	(6.54)	(6.68)	(6.79)	(7.08)	(7.42)	(7.67)	(8.04)	(8.79)	(9.54)

Code: WE

Wheel, Optional, Manifold Rear Port

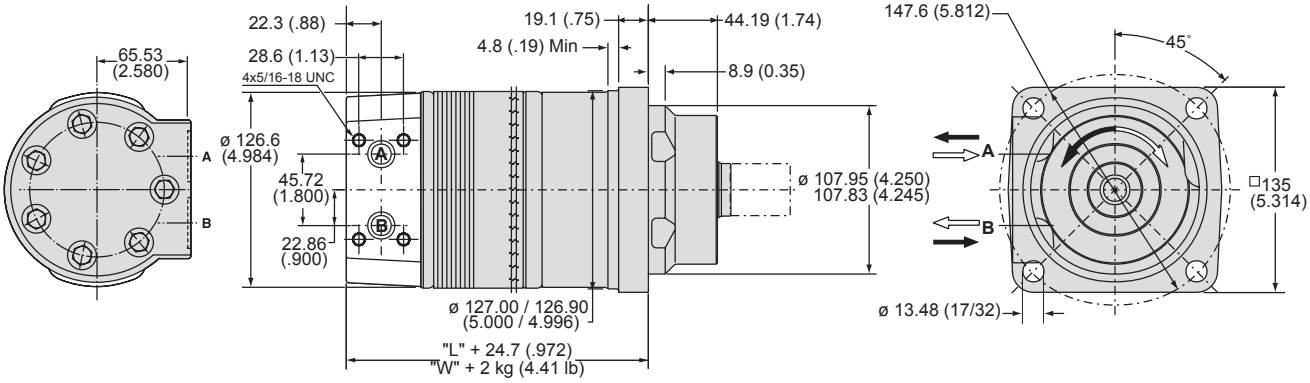

Code WE	disp.	0140	0170	0195	0240	0280	0310	0335	0405	0475	0530	0625	0785	0960
Weight/Gewicht	**kg**	**17.6**	**17.8**	**18.1**	**18.4**	**18.8**	**19.1**	**19.3**	**19.8**	**20.5**	**21.3**	**22.0**	**23.5**	**25.2**
Poids/Peso	(lb)	(38.7)	(39.3)	(39.8)	(40.6)	(41.5)	(42.0)	(42.4)	(43.7)	(45.2)	(46.8)	(48.4)	(51.8)	(55.6)
Length	**"L" mm**	**178**	**181**	**184**	**189**	**193**	**197**	**200**	**207**	**216**	**222**	**232**	**251**	**270**
	"L" (in)	(6.99)	(7.11)	(7.24)	(7.43)	(7.61)	(7.75)	(7.86)	(8.15)	(8.49)	(8.74)	(9.12)	(9.87)	(10.62)

English equivalents for metric specifications are shown in ( ).

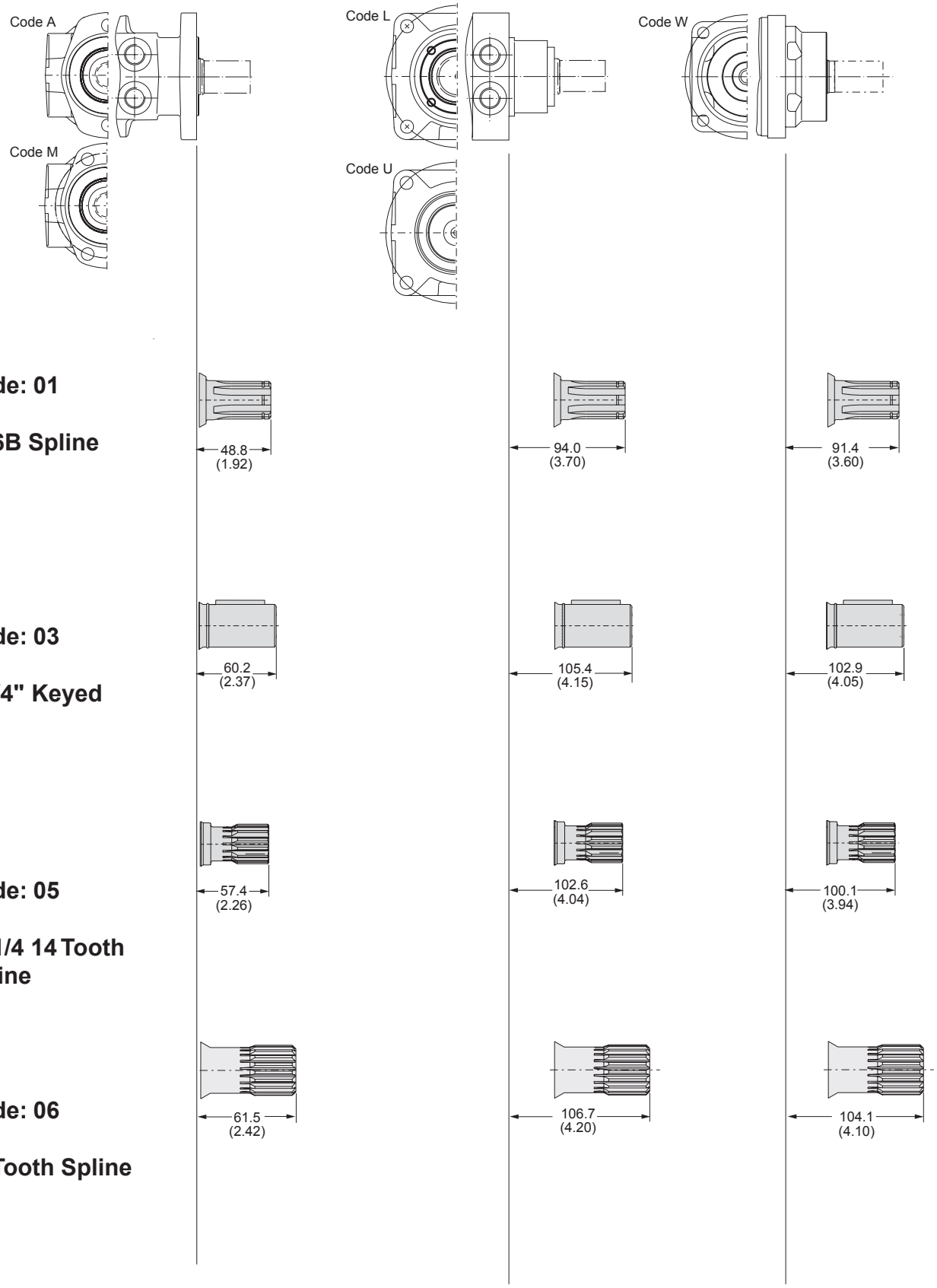

Code: 01

1" 6B Spline

Code: 03

1 1/4" Keyed

Code: 05

1" 1/4 14 Tooth Spline

Code: 06

19 Tooth Spline

English equivalents for metric specifications are shown in ( ).

Code: 01

1" 6B Spline

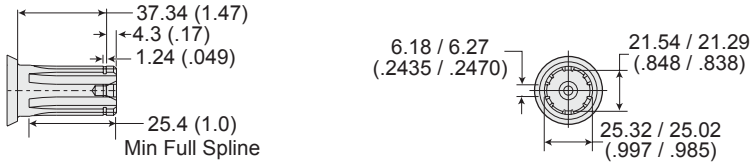

Code: 03

1 1/4" Keyed

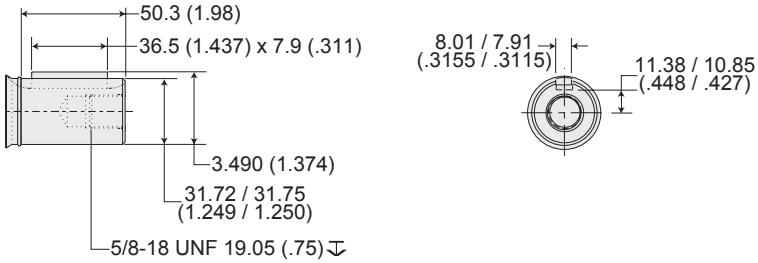

Code: 05

1" 1/4 14 Tooth Spline

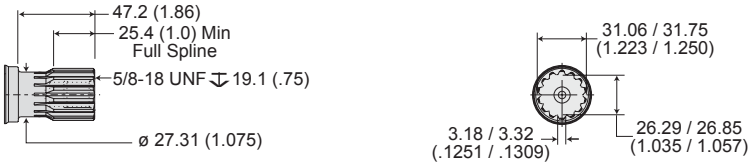

Code: 06

19 Tooth Spline

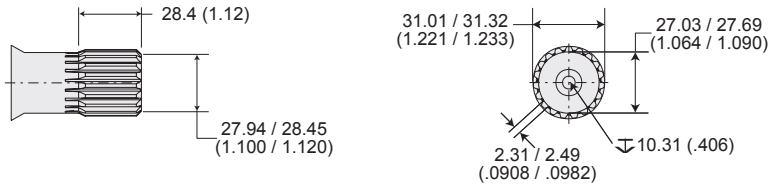

English equivalents for metric specifications are shown in ( ).

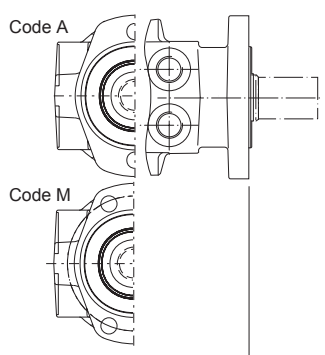

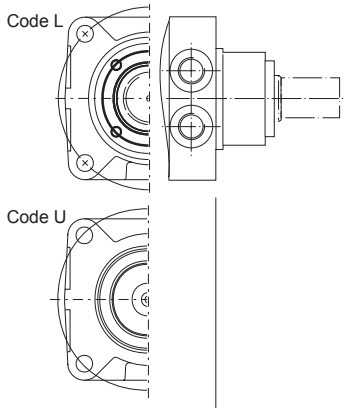

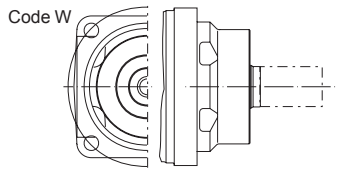

Code: 08

1 1/4" Tapered

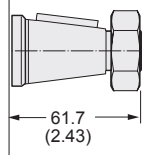

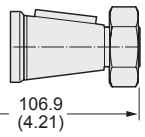

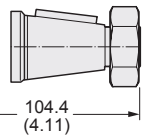

Code: 19

1 3/8" J501 Taper

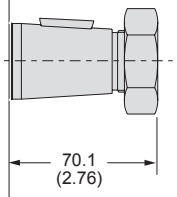

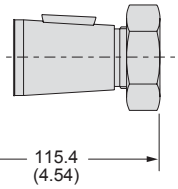

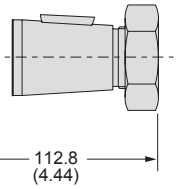

English equivalents for metric specifications are shown in ( ).

Code: 08

1 1/4" Tapered

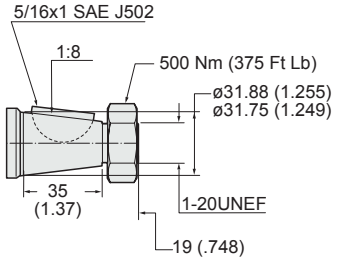

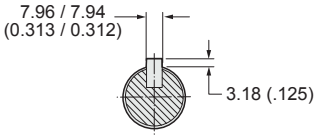

Code: 19

1 3/8" J501 Taper

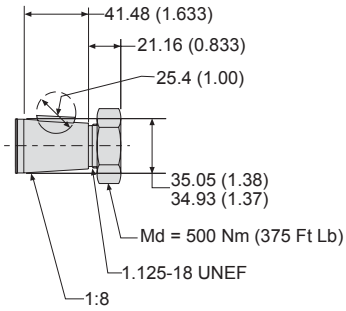

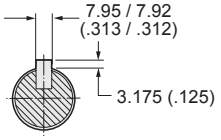

English equivalents for metric specifications are shown in ( ).

13 Displacements **13 Schluckvolumen** **13 Cylindrée** **13 Despazamientos**		(8.6 to 58.5 in³/rev) **140 . . . 959 cm³/rev**
	Cont.	**Int.**
Maximum Pressure **Eingangsdruck** **Pression entrée** **Presion Maxima**	(3000 psid) **. . . 207 bar**	(4000 psid) **. . . 276 bar**
Maximum Oil Flow **Schluckstrom** **Débit d'huile** **Caudal Maximo de Aceite**		(30 gpm) **. . . 114 lpm**
Maximum Speed **Drehzahl** **Vitesse de rotation** **Velocidad Maxima**		(660 rpm) **660 rpm**
	Cont.	**Int.**
Maximum Torque **MaxDrehmoment** **Couple** **Torque Maximo**	(9,239 lb in) **1044 Nm**	(12,636 lb in) **1428 Nm**
Maximum Side Load at Key **Seitenlast** **Charges latèrales** **Carga Maxima Lateral**		(3597 lb) **. . . 16000 N**

⚠ CAUTION!
See installation/operating instructions for product cautions and proper use.

Exceptional Strength and Durability in a High Performance Motor/Brake Package

This brake motor consists of a BG Series motor integrated into a wet disc, spring applied, hydraulically released brake. Standard holding capacity is 12,000 lb in of holding torque. The brake is front mounted for reliable operation even in the event of a system failure. The brake release port is capable of pressures to 3000 PSI.

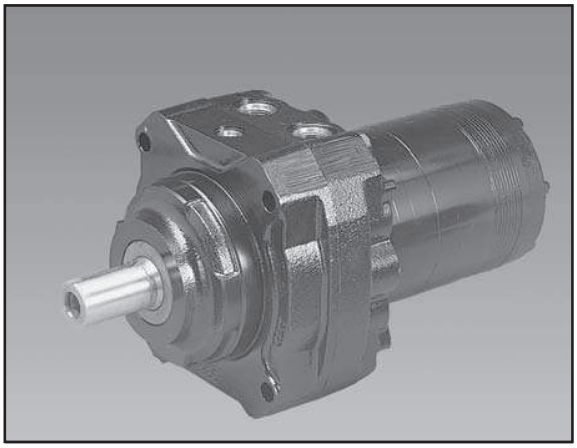

Rated Brake Holding Capacity @ Zero Release Pressure Nm (in-lbs)	Maximum Full Release Pressure bar (PSI)
1350 (12,000)	22 (315)

12,000 in-lbs is standard holding capacity.
For other holding capacities, consult the factory for price and availability.

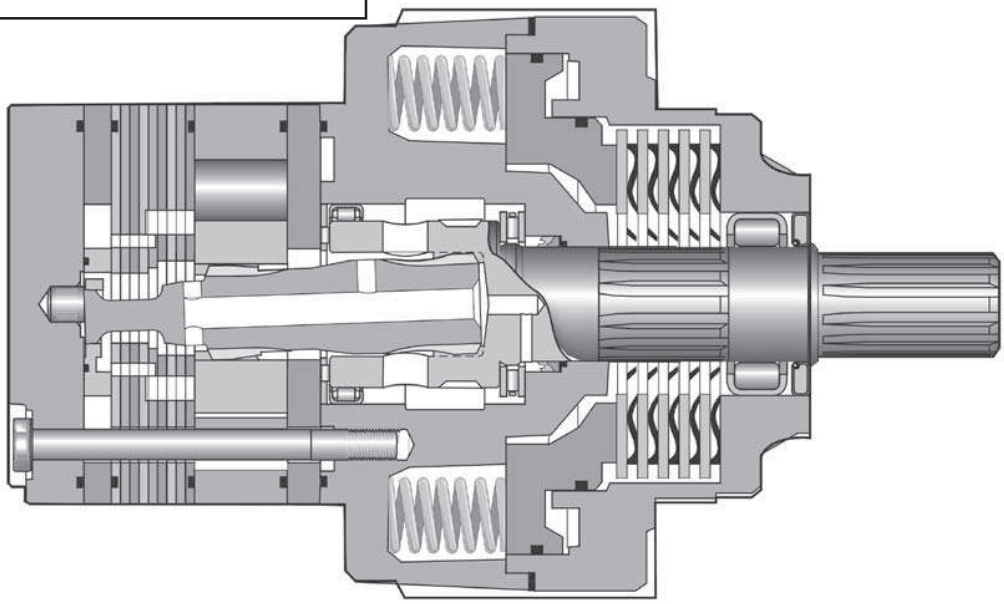

* With optional spring package.

BG	XXXX	X	X	XX	0	XXXX
Series	Displacement Schluckvolumen Cylindrée Desplazamiento	Mounting Gehäuse Carter Montaje	Ports Anschluß Plan de raccordement Lumbreras	Shaft Welle Arbre Eje	Rotation Drehrichtung Direction de rotation Rotacion	Options Opciones

Code	cm³/U cm³/tr cm³/giro in³/rev
0140	141 / 8.6
0170	169 / 10.3
0195	195 / 11.9
0240	238 / 14.5
0280	280 / 17.1
0310	310 / 18.9
0335	337 / 20.6
0405	405 / 24.7
0475	477 / 29.1
0530	528 / 32.3
0625	623 / 38.0
0785	786 / 48.0
0960	959 / 58.5

Code	Front Port Rotation
0	Standard
1	Reverse Timed Manifold

Code	Shaft
03	1 1/4" Keyed
05	1 1/4" 14 Tooth Spline
08	1 1/4" Tapered* 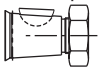
19	1 3/8" Tapered* 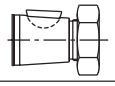
62	SAE 14 Tooth Spline 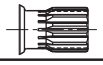

Code	Mounting
A	Front Mtg/Front Bolting 1/2-13 UNC Thd
B	SAE "B" 2 Bolt
C	Rear Mtg/Thru Bolting

Code	Ports
S	7/8-14 SAE 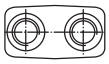
M	Manifold 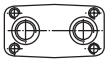

Code	Description
AAAB	No Paint No lackiert
AAAA	Black Paint Schwarz lackiert

For performance data curves, see TG section.

For other available options, see pages 257–258.

Wheel Mount/Radnabengehause
Monture à roue/ Montaje de rueda

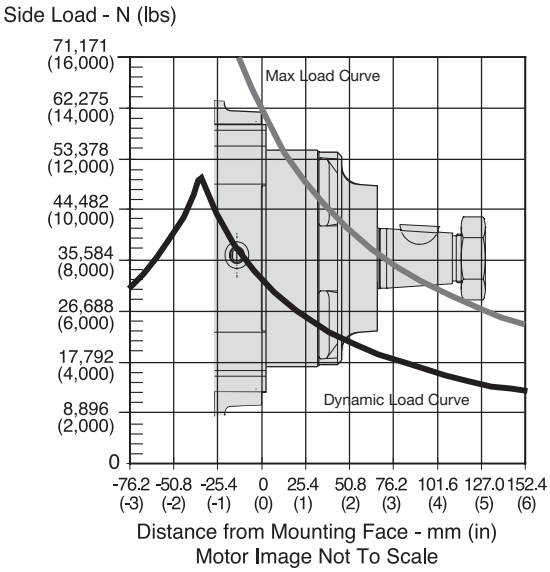

The dynamic side load curve is based on uni-directional steady state loads for L_{10} bearing life at 3 x 10^6 revolutions.
Die zulässige auslegbare radiale Wellenbelastungskurve ist unter ruhenden, einseitig statisch gerichteten Lastverhältnissen auf eine L_{10} Lebensdauer mit 3 x 10^6 Umdrehungen kalkuliert.
La courbe de charge latérale permise se base sur des charges unidirectionnelles en régime permanent pour le roulement L_{10} à 3 x 10^6 révolutions.
La curva de valores admisibles de carga lateral está basada en cargas constantes para cojinetes L_{10} a 3 x 10^6 revoluciones.

The maximum load curve is defined by bearing static load capacity. This curve should not be exceeded at any time including shock loads.
Die maximale radiale Wellenbelastungskurve ist definiert als maximale statische Last ohne Drehzahl. Sie gilt als Grenze und sollte keinesfalls überschritten werden.
La courbe de charge maximale est définie par la capacité de charge statique portante. Cette courbe ne devrait être dépassée en aucun moment y compris pour les charges par à-coups.
La curva de carga máxima queda definida por la capacidad de carga estática del cojinete. No se deben superar los valores de esta curva, ni siquiera con cargas provisorias de impacto.

Equation to Calculate the Expected Radial Bearing Life
Gleichung zur Ermittlung der Lagerlebensdauer

Equation to calculate the dynamic bearing life for a given load:
Bestimmung der erlaubten radialen Wellenbelastung mit vorgegebener Last

Use F_a, F_b and S in equation to determine hours of L_{10} bearing life.
Die Lebensdauer in Stunden ergibt sich durch einsetzen von F_a, F_b, und S in die nachstehende Formel.

$$L = \frac{3 \times 10^6}{60 \times S} \left\{ \frac{F_a}{F_b} \right\}^{3.33}$$

Where / Mit:

S = Shaft Speed RPM / Abtriebswellendrehzahl in min^{-1}
L = Life In Hours / Lebensdauer in Stunden
F_a = Dynamic side load defined by above curve at a distance from mounting flange. / Erlaubte radiale Wellenbelastung als Function der Laenge
F_b = Application side load. / Anwendungsseitige Wellenbelastung

Note: Calculations are based on L_{10} bearing life per ISO 281.
Auslegung basiert auf einer L_{10} Lenbendauer nach ISO 281

Code: AS

Front Mounting / Front Bolting, 7/8-14 SAE O-Ring

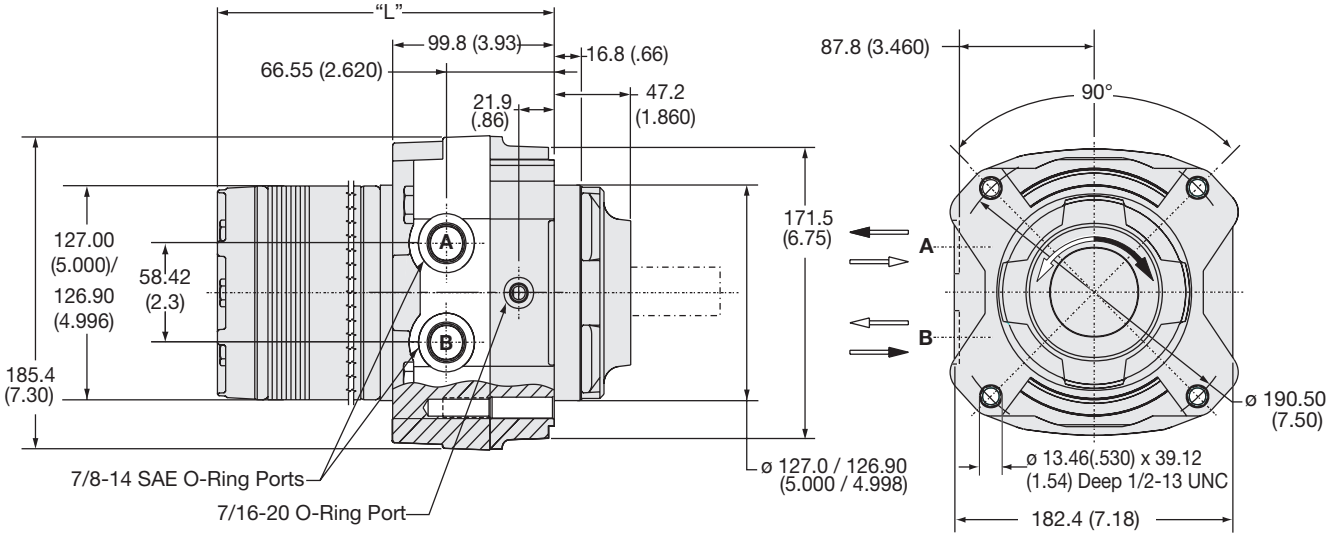

Code AS		0140	0170	0195	0240	0280	0335	0405	0475	0530	0625	0785	0960
Weight / Gewicht	**kg**	**27.3**	**27.5**	**27.8**	**28.1**	**28.5**	**28.9**	**29.5**	**30.2**	**30.9**	**31.7**	**33.2**	**34.9**
Poids/Peso	(lb)	(60.2)	(60.8)	(61.3)	(62.1)	(63.0)	(63.9)	(65.2)	(66.7)	(68.3)	(69.9)	(73.3)	(77.1)
Length	**"L"mm**	**192.3**	**195.3**	**198.6**	**203.2**	**208.0**	**214.4**	**221.7**	**230.4**	**236.7**	**246.1**	**265.2**	**284.2**
	"L" (in)	(7.57)	(7.69)	(7.82)	(8.00)	(8.19)	(8.44)	(8.73)	(9.07)	(9.32)	(9.69)	(10.44)	(11.19)

Code: BM*

SAE "B" 2 Bolt, Manifold

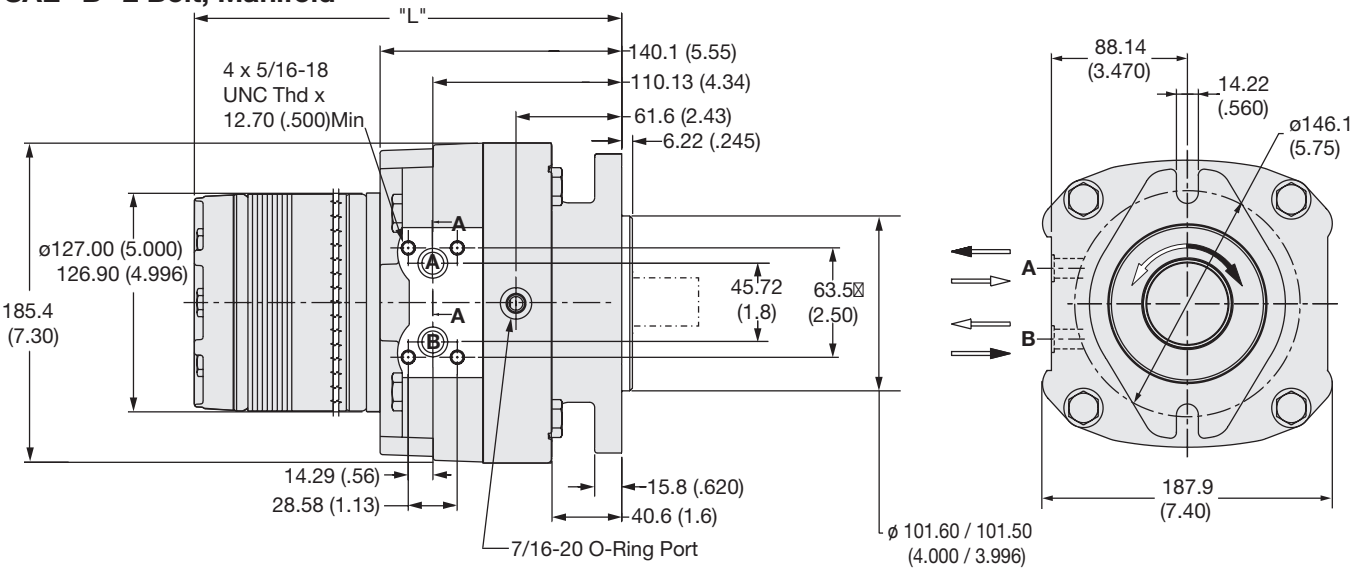

Code BM		0140	0170	0195	0240	0280	0335	0405	0475	0530	0625	0785	0960
Weight / Gewicht	**kg**	**28.4**	**28.7**	**28.9**	**29.3**	**29.7**	**30.1**	**30.1**	**30.7**	**31.3**	**32.8**	**34.3**	**36.1**
Poids/Peso	(lb)	(62.6)	(63.2)	(63.7)	(64.5)	(65.4)	(66.3)	(67.6)	(69.1)	(70.7)	(72.3)	(75.7)	(79.5)
Length	**"L" mm**	**233.2**	**236.4**	**239.6**	**244.3**	**249.1**	**255.4**	**262.8**	**271.3**	**277.7**	**287.2**	**306.3**	**325.3**
	"L" (in)	(9.18)	(9.31)	(9.43)	(9.62)	(9.81)	(10.06)	(10.35)	(10.68)	(10.93)	(11.31)	(12.06)	(12.81)

English equivalents for metric specifications are shown in ( ).

Code: CS

Rear Mounting/Thru Bolting, 7/8-14 SAE O-Ring

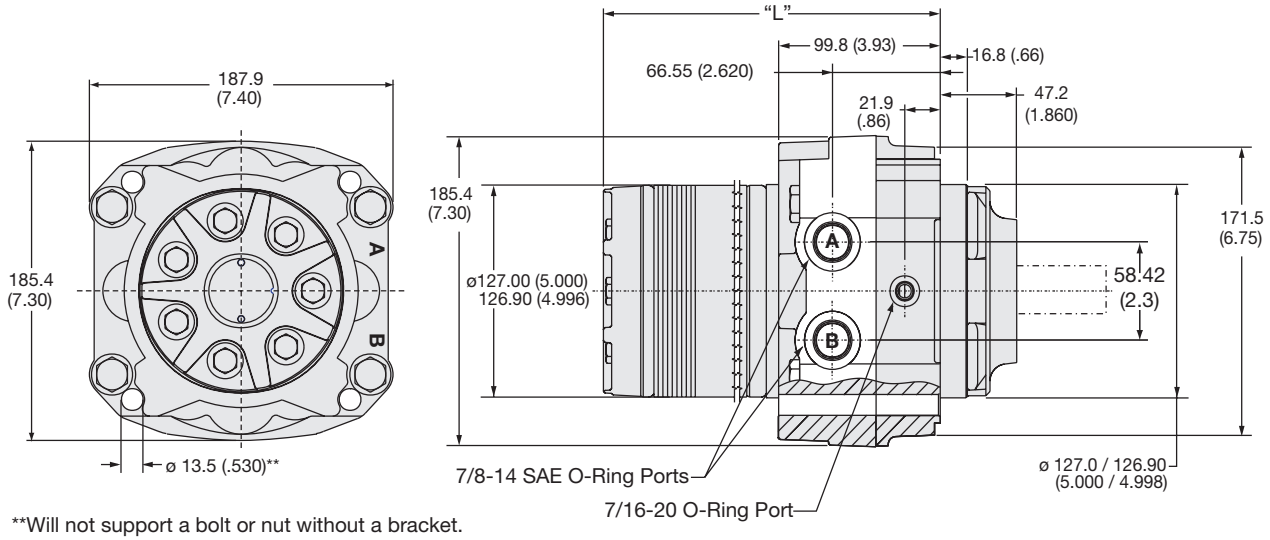

**Will not support a bolt or nut without a bracket.

Code CS		0140	0170	0195	0240	0280	0335	0405	0475	0530	0625	0785	0960
Weight / Gewicht	**kg**	**27.3**	**27.5**	**27.8**	**28.1**	**28.5**	**28.9**	**29.5**	**30.2**	**30.9**	**31.7**	**33.2**	**34.9**
Poids/Peso	(lb)	(60.2)	(60.8)	(61.3)	(62.1)	(63.0)	(63.9)	(65.2)	(66.7)	(68.3)	(69.9)	(73.3)	(77.1)
Length	**"L" mm**	**192.3**	**195.3**	**198.6**	**203.2**	**208.0**	**214.4**	**221.7**	**230.4**	**236.7**	**246.1**	**265.2**	**284.2**
	"L" (in)	(7.57)	(7.69)	(7.82)	(8.00)	(8.19)	(8.44)	(8.73)	(9.07)	(9.32)	(9.69)	(10.44)	(11.19)

***Note:** Motor with manifold mount is supplied with 2 o-rings.

Zum Motor mit Universalanschluß werden 2 o-ringe geliefert.

Deux joints toriques sont livrés avec les moteurs a plan de raccordement universel.

El motor con montaje de distribuidor se suministra con 2 sellos toroidales.

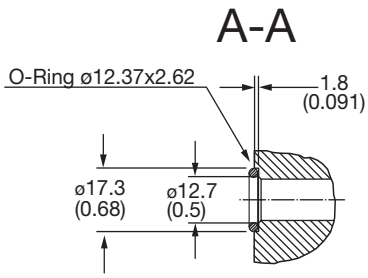

English equivalents for metric specifications are shown in ( ).

Code A & C

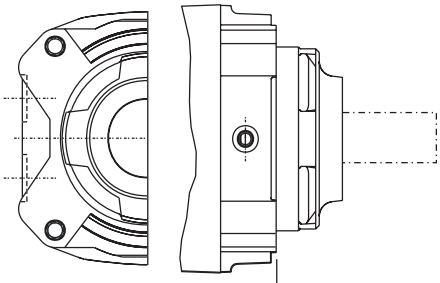

Code B

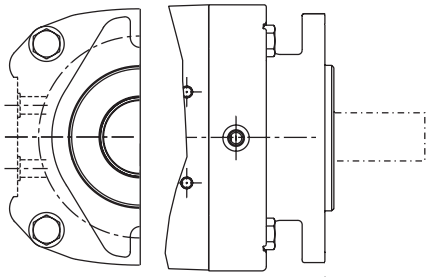

Code: 03

1 1/4" Keyed

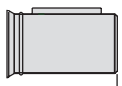

106.7/104.7
(4.20/4.12)

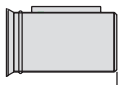

65.5/63.5
(2.58/2.50)

Code: 05

1 1/4" 14 Tooth Spline

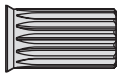

106.7/104.7
(4.20/4.12)

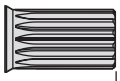

65.5/63.5
(2.58/2.50)

Code: 08

1 1/4" Taper

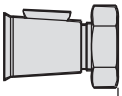

107.9/105.9
(4.25/4.17)

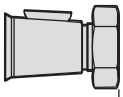

66.7/64.7
(2.63/2.55)

Code: 19

1 3/8" J501 Taper

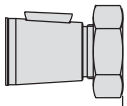

110.5/108.5
(4.35/4.27)

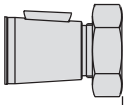

69.3/67.3
(2.73/2.65)

Code: 62

SAE 14 Tooth Spline

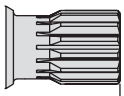

97.6/95.6
(3.84/3.76)

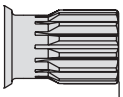

56.4/54.4
(2.22/2.14)

English equivalents for metric specifications are shown in ( ).

Code: 03

1 1/4" Keyed

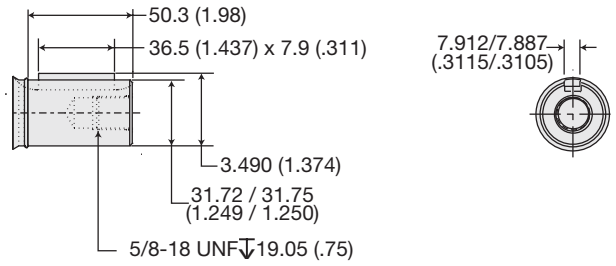

Code: 05

1 1/4" 14 Tooth Spline

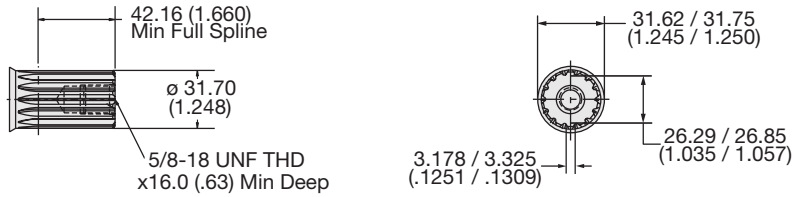

Code: 08

1 1/4" Taper

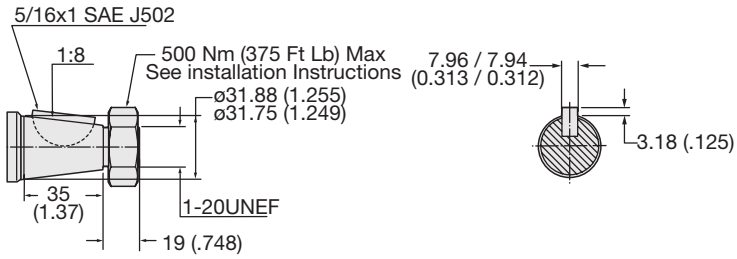

Code: 19

1 3/8" J501 Taper

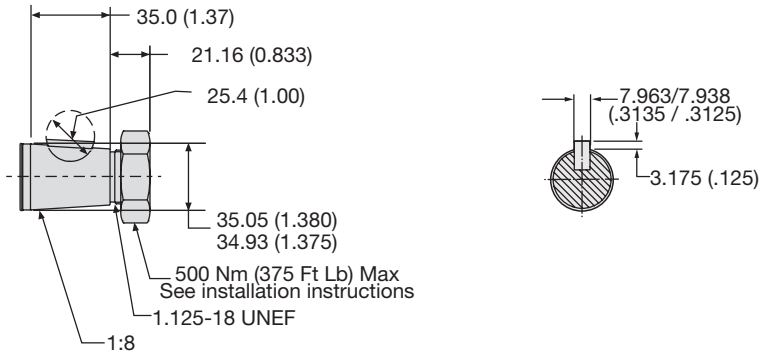

Code: 62

SAE 14 Tooth Spline

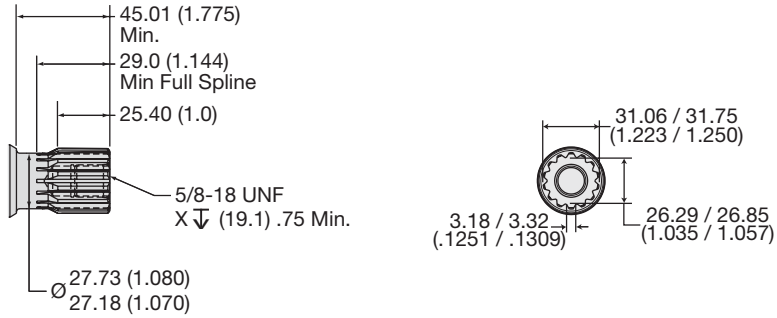

English equivalents for metric specifications are shown in ( ).

13 Displacements **13 Schluckvolumen** **13 Cylindrée** **13 Despazamientos**		(8.6 to 58.5 in³/rev) **140 . . . 958 cm³/rev**
	Cont.	**Int.**
Maximum Pressure **Eingangsdruck** **Pression entrée** **Presion Maxima**	(3000 psid) **. . . 207 bar**	(4000 psid) **. . . 276 bar**
Maximum Oil Flow **Schluckstrom** **Débit d'huile** **Caudal Maximo de Aceite**		(30 gpm) **. . . 114 lpm**
Maximum Speed **Drehzahl** **Vitesse de rotation** **Velocidad Maxima**		(660 rpm) **660 rpm**
	Cont.	**Int.**
Maximum Torque **MaxDrehmoment** **Couple** **Torque Maximo**	(9,239 lb in) **1044 Nm**	(12,636 lb in) **1428 Nm**
Maximum Side Load at Key **Seitenlast** **Charges latèrales** **Carga Maxima Lateral**		(3597 lb) **. . . 16000 N**

Holding capacity is 497 Nm (4,400 in lbs) with 68 Nm (600 in lbs) of input torque at lever pivot. Brake capacities are typical for non-burnished brake shoe. OEM testing required to verify actual field conditions.

Das maximale Bremsmoment von 497 Nm (4400 in lbs) wird erreicht durch Betätigung des Bremshebels mit 68 Nm (600 in lbs). Genannte Einsatzdaten beziehen sich auf Neuprodukte. Die Eignung der Geräte ist vom Anwender für den jeweiligen Einsatz individuell zu prüfen .

La puissance de maintien est de 497 Nm (4400 pouces-livres) avec couple d'entrée au pivot du levier de 68 Nm (600 pouces-livres). Les puissances de freinage sont typiques pour des sabots de frein non brunis. Les essais imposés par le constructeur d'origine exigent la vérification des conditions réelles sur place.

Capacidad de retención de 497 N-m (4.400 libras-pulgada) con 69 N-m (600 libras-pulgada) de torque de entrada en el brazo de articulación. Los valores de capacidad de frenado son típicas para zapatas de freno no bruñidas. Para fabricantes de equipos originales se deben efectuar pruebas bajo condiciones reales de funcionamiento.

A Mechanical Brake Motor for Tough Applications

Parker's latest DG Series integrated motor is truly another innovation the market has been waiting for. The compact size, reliable holding capability and ease of installation makes this new mechanical brake motor the perfect choice for many turf or agricultural applications using hydraulics for wheel motors. This mechanically applied version of the brake motor is available in 13 motor displacements (8.6 to 58.5 cu./in.). Pressure capacities are up to 280 bar (4,000 psi) intermittent and 210 bar (3,000 psi) continuous. Flows up to 114 lpm (30 gpm) and speed up to 660 rpm are available. Motor output torque up to 1428 Nm (12,636 lb. in.) intermittent and 1044 Nm (9,239 lb. in.) continuous is available.

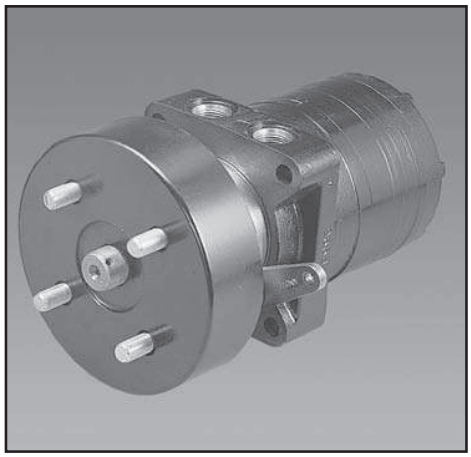

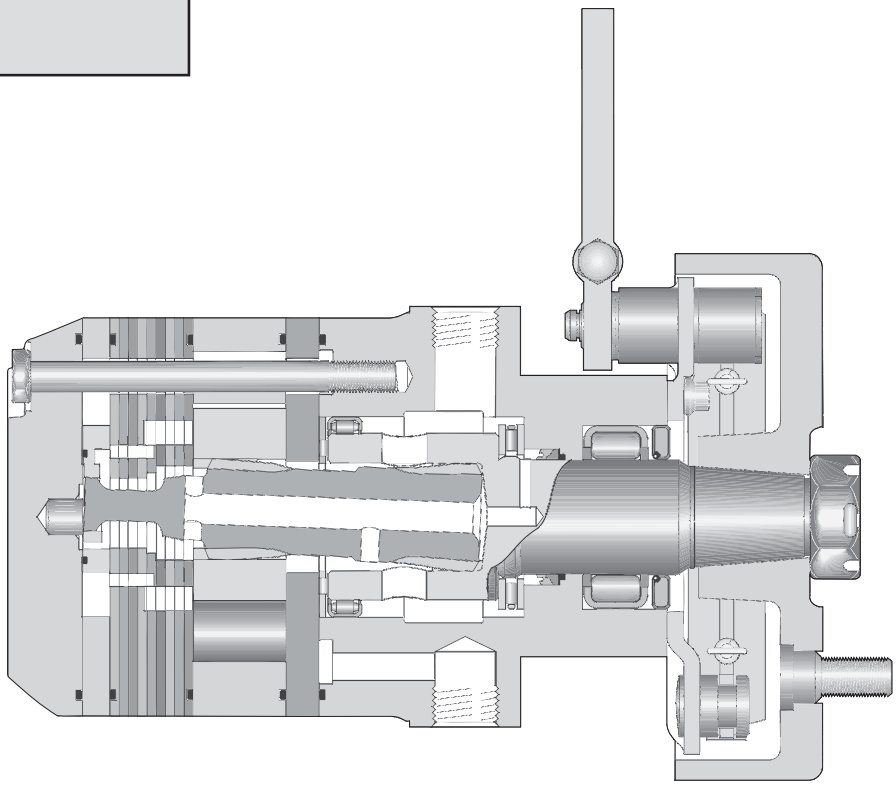

DG	XXXX	XS	X	8	0	XXXX
Series	Displacement Schluckvolumen Cylindrée Desplazamiento	Mounting/Ports Gehäuse/Anschluß Carter/Plan de raccordement Montaje/Lumbreras	Drum Type Trommelbremse Tipo de tambor Genre de tambour	Shaft Welle Arbre Eje	Rotation Drehrichtung Direction de rotation Rotacion	Options Opciones

Code	cm^3/tr cm^3/giro cm^3/U	in^3/rev
0140	141	8.6
0170	169	10.3
0195	195	11.9
0240	238	14.5
0280	280	17.1
0310	310	18.9
0335	337	20.6
0405	405	24.7
0475	477	29.1
0530	528	32.3
0625	623	38.0
0785	786	48.0
0960	959	58.5

Code	Front Port Rotation
0	Standard
1	Reverse Timed Manifold

Code	Mounting/Ports
AS	Wheel Mt. w/Brake Lever @ 105 °/ 7/8-14 SAE
BS	Wheel Mt. w/Brake Lever @ 165 °/ 7/8-14 SAE
CS	Wheel Mt. w/Brake Lever @ 195 °/ 7/8-14 SAE
DS	Wheel Mt. w/Brake Lever @ 255 °/ 7/8-14 SAE
ES	Wheel Mt. w/Brake Lever @ 285 °/ 7/8-14 SAE
FS	Wheel Mt. w/Brake Lever @ 345 °/ 7/8-14 SAE
GS	Wheel Mt. w/Brake Lever @ 15 °/ 7/8-14 SAE
HS	Wheel Mt. w/Brake Lever @ 75 °/ 7/8-14 SAE

Code	Description
AAAB	No Paint No lackiert
AAAA	Black Paint Schwarz lackiert

Code	Drum Type
A	4 Bolt
B	5 Bolt

Code	Shaft
8	1 1/4" Tapered

For other available options, see pages 257–258.

Wheel Mount/Radnabengehäuse
Monture à roue/ Montaje de rueda

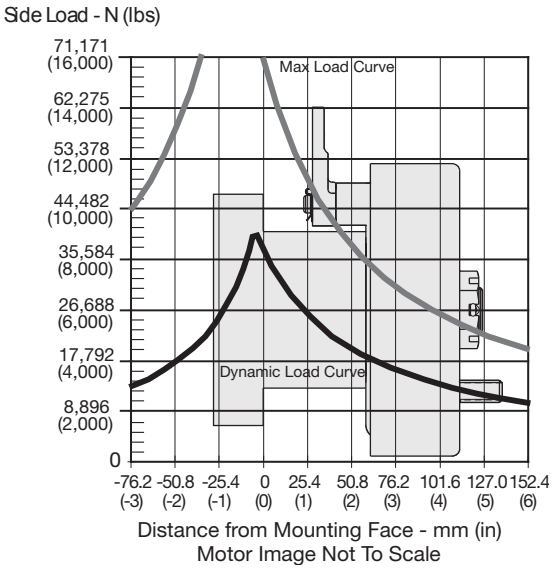

The dynamic side load curve is based on uni-directional steady state loads for L_{10} bearing life at 3 x 10^6 revolutions.
Die zulässige auslegbare radiale Wellenbelastungskurve ist unter ruhenden, einseitig statisch gerichteten Lastverhältnissen auf eine L_{10} Lebensdauer mit 3 x 10^6 Umdrehungen kalkuliert.
La courbe de charge latérale permise se base sur des charges unidirectionnelles en régime permanent pour le roulement L_{10} à 3 x 10^6 révolutions.
La curva de valores admisibles de carga lateral está basada en cargas constantes para cojinetes L_{10} a 3 x 10^6 revoluciones.

The maximum load curve is defined by bearing static load capacity. This curve should not be exceeded at any time including shock loads.
Die maximale radiale Wellenbelastungskurve ist definiert als maximale statische Last ohne Drehzahl. Sie gilt als Grenze und sollte keinesfalls überschritten werden.
La courbe de charge maximale est définie par la capacité de charge statique portante. Cette courbe ne devrait être dépassée en aucun moment y compris pour les charges par à-coups.
La curva de carga máxima queda definida por la capacidad de carga estática del cojinete. No se deben superar los valores de esta curva, ni siquiera con cargas provisorias de impacto.

Equation to Calculate the Expected Radial Bearing Life
Gelichung zur Ermittlung der Lagerlebensdauer

Equation to calculate the dynamic bearing life for a given load:
Bestimmung der erlaubten radialen Wellenbelastung mit vorgegebener Last

Use F_a, F_b and S in equation to determine hours of L_{10} bearing life.
Die Lebensdauer in Stunden ergibt sich durch einsetzen von F_a, F_b, und S in die nachstehende Formel.

$$L = \frac{3 \times 10^6}{60 \times S} \left\{ \frac{F_a}{F_b} \right\}^{3.33}$$

Where / Mit:

S = Shaft Speed RPM / Abtriebswellendrehzahl in min^{-1}
L = Life In Hours / Lebensdauer in Stunden
F_a = Dynamic side load defined by above curve at a distance from mounting flange. / Erlaubte radiale Wellenbelastung als Function der Laenge
F_b = Application side load. / Anwendungsseitige Wellenbelastung

Note: Calculations are based on L_{10} bearing life per ISO 281.
Auslegung basiert auf einer L_{10} Lenbendauer nach ISO 281

Code: AS

Wheel Mount w/Brake Lever / 7/8-14 SAE O-Ring

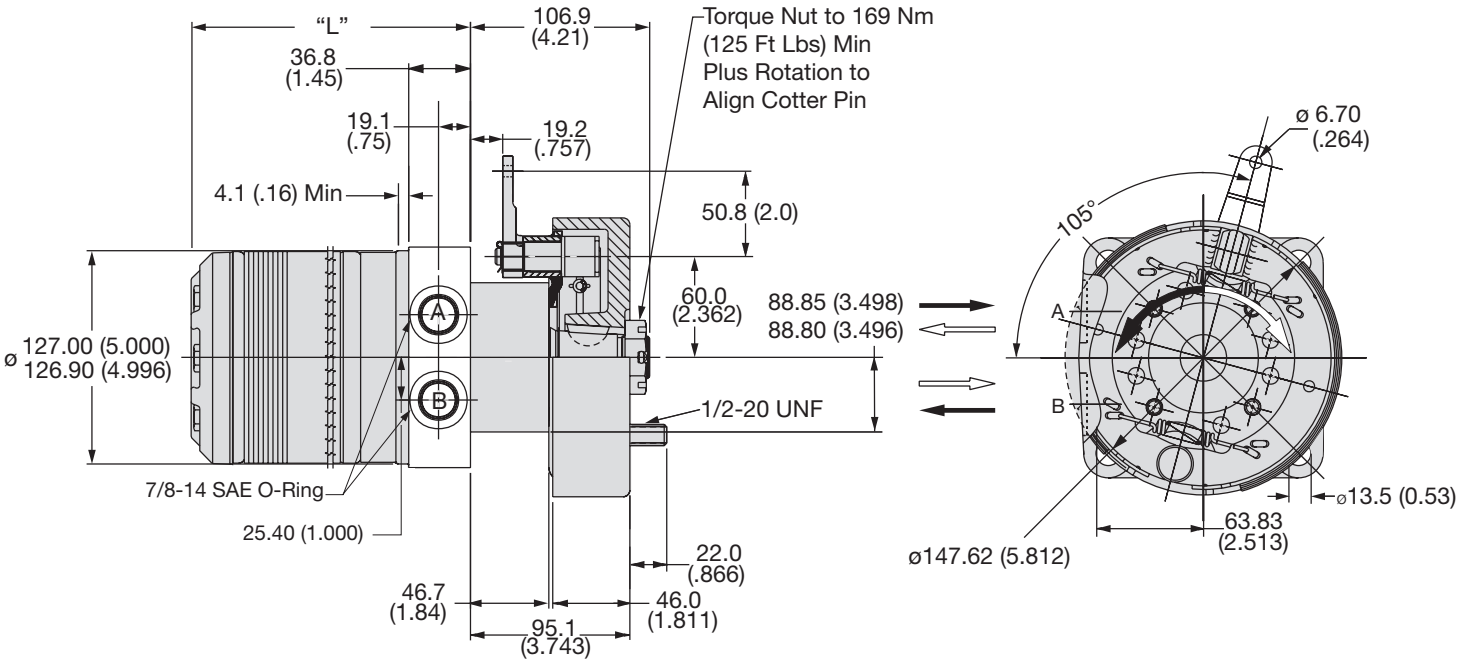

Note:
1. Brake Acuation Lever can be positioned in 12.00° increments from that shown.
   Bremshebel ist kreisförmig in Sigmenten von 12.00 ° positionierbar.
   Le levier de commande du frein peut être positionné à des échelons d'accroissement de 12,00° de ce qui est montré.
   El brazo de actuación del freno se puede colocar en avances de 12,00 grados con respecto a la posición mostrada.
2. Brake Acuation Lever is shipped unattached, secured with wire or tiewrap to assembly.
   Hebel ist anbei. Endmontage erforderlich.
   Le levier de commande du frein est expédié sous forme détachée; il est attaché à l'ensemble avec du fil ou du ruban.
   El brazo de actuación del freno se suministra suelto, sin conexión, sólo atado provisoriamente al mecanismo.

Code AS	**disp.**	**0140**	**0170**	**0195**	**0240**	**0280**	**0310**	**0335**	**0405**	**0475**	**0530**	**0625**	**0785**	**0960**
Weight/Gewicht	**kg**	**14.6**	**14.8**	**15.1**	**15.5**	**15.9**	**16.1**	**16.3**	**16.9**	**17.5**	**18.3**	**19.0**	**20.5**	**22.2**
Poids/Peso	(lb)	(41.3)	(41.8)	(42.4)	(43.2)	(44.1)	(44.6)	(44.9)	(46.3)	(47.7)	(49.4)	(50.9)	(54.4)	(58.1)
Length	**"L" mm**	**150**	**154**	**157**	**161**	**166**	**170**	**173**	**180**	**188**	**195**	**204**	**223**	**242**
	"L" (in)	(5.92)	(6.04)	(6.17)	(6.35)	(6.54)	(6.68)	(6.79)	(7.08)	(7.42)	(7.67)	(8.04)	(8.79)	(9.54)

For performance data curves, see TG section.

English equivalents for metric specifications are shown in ( ).

Drum Type/Trommelbremse/ Tipo de tambor/ Genre de Tambour

Code: A

4 Bolt

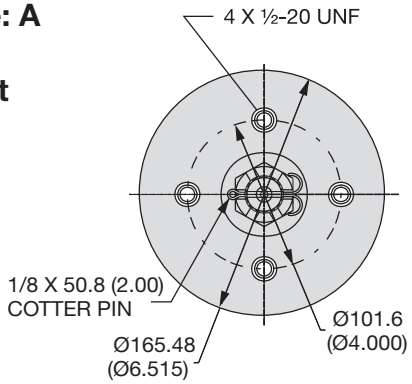

Code: B

5 Bolt

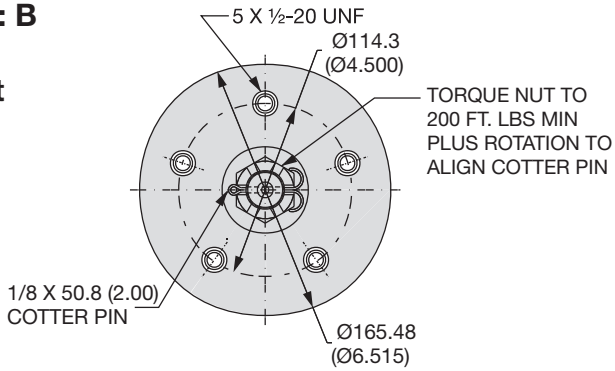

Shafts / Abtriebswellen Arbre / Ejes

Code: 8

1 1/4" Taper

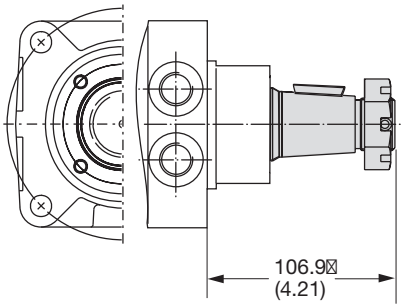

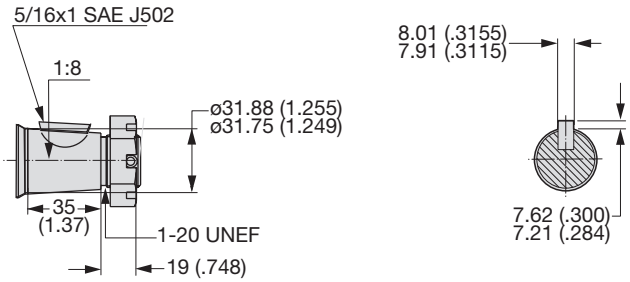

English equivalents for metric specifications are shown in ( ).

13 Displacements **13 Schluckvolumen** **13 Cylindrée** **13 Despazamientos**		(8.6 to 58.5 in³/rev) **141 . . . 959 cm³/rev**
	Cont.	**Int.**
Maximum Pressure **Eingangsdruck** **Pression entrée** **Presion Maxima**	(3000 psid) **. . . 207 bar**	(4000 psid) **. . . 276 bar**
Maximum Oil Flow **Schluckstrom** **Débit d'huile** **Caudal Maximo de Aceite**		(30 gpm) **. . . 114 lpm**
Maximum Speed **Drehzahl** **Vitesse de rotation** **Velocidad Maxima**		(660 rpm) **660 rpm**
	Cont.	**Int.**
Maximum Torque **MaxDrehmoment** **Couple** **Torque Maximo**	(8,772 lb in) **991 Nm**	(11,876 lb in) **1342 Nm**
Maximum Side Load at Key **Seitenlast** **Charges latèrales** **Carga Maxima Lateral**		(4800 lb) **. . . 21360 N**

A Rugged Motor for Heavy Duty, High Side Load Applications

This motor was designed for tough applications. A stout drive link with patented 60:40 spline geometry will transmit over 13,000 lb-in of torque. The 1-1/2" output shaft can support 7000 pounds of radial load. Efficiency is assured by the use of roller vanes and sealed commutator. Durability is maintained by continually washing the powertrain splines and shaft seal in cooling fluid.

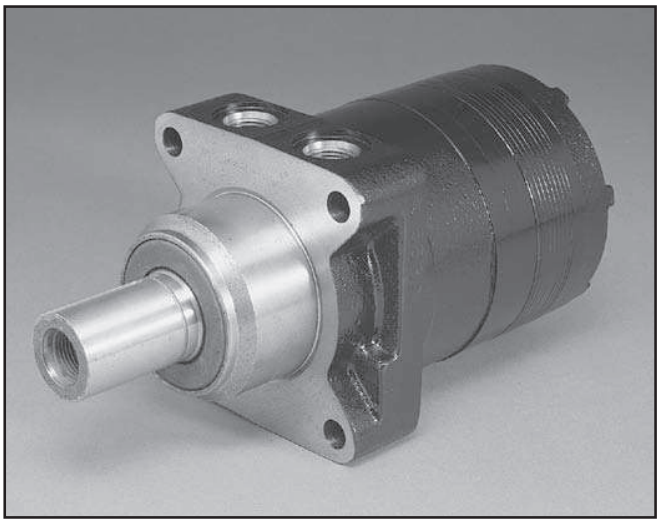

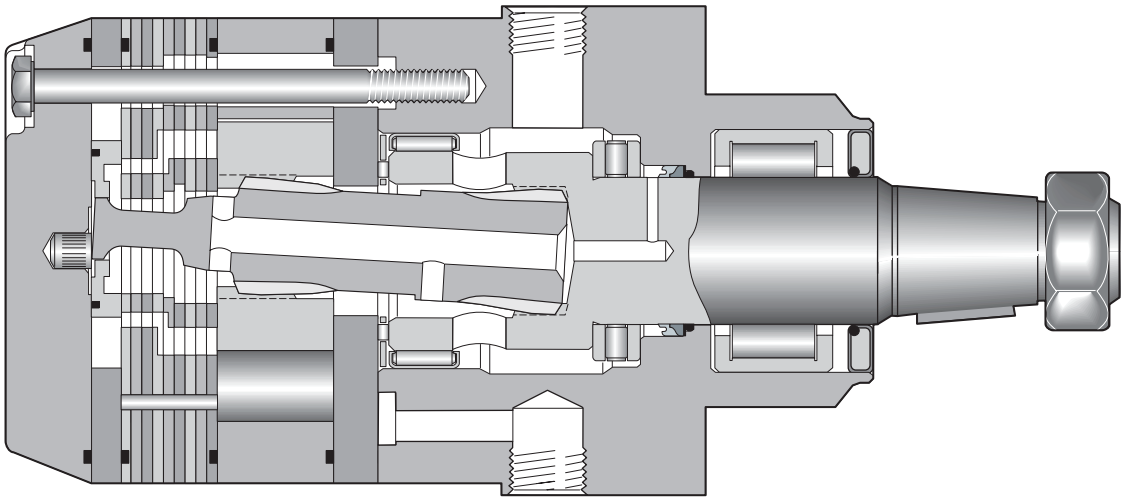

TH	XXXX	X	X	XX	0	XXXX
Series	Displacement Schluckvolumen Cylindrée Desplazamiento	Mounting Gehäuse Carter Montaje	Ports Anschluß Plan de raccordement Lumbreras	Shaft Welle Arbre Eje	Rotation Drehrichtung Direction de rotation Rotacion	Options Opciones

Code	cm³/U cm³/tr cm³/giro	in³/rev
0140	141 /	8.6
0170	169 /	10.3
0195	195 /	11.9
0240	238 /	14.5
0280	280 /	17.1
0310	310 /	18.9
0335	337 /	20.6
0405	405 /	24.7
0475	477 /	29.1
0530	528 /	32.3
0625	623 /	38.0
0785	786 /	48.0
0960	959 /	58.5

Code	Ports
S	7/8-14 SAE
A*	Axial

Code	Front Port Rotation
0	Standard
1	Reverse Timed Manifold

Code	Rear Rotation
0	Standard 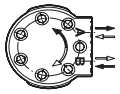
1	Reverse Timed Manifold 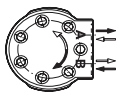

Rotation viewed from shaft end.

Code	Mounting
M	Magneto
P*	SAE "B" 4 Bolt 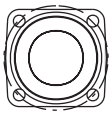
U	Wheel, Standard 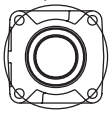

Code	Shaft
31	1 1/2" J501 Taper 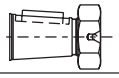
32	1 1/2" Keyed
36	1 1/2" 17 Tooth 12/24 Spline

* Requires rear porting.
Nur Endanschluss moglich
Exige des orifices en arriere
Necesita lumbrera posterior

Code	
AAAB	No Paint No lackiert
AAAA	Black Paint Schwarz lackiert

Consult factory for other available options, configurations ordering codes and lead times.

For other available options, see pages 257–258.

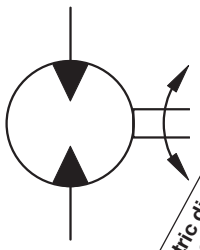

Motor Series TH	Geometric displacement / Geom. Schluckvolumen / Cylindrée / Cilindrata	Max. speed @ Max. intermittent flow / Max. Drehzahl Intermittierender Betrieb: / Vitesse de rotation maxi / Velocidad maxima a caudal intermitente maximo	Max. oil flow / Max. Schluckstrom / Débit d'huile maxi / Portata max		Max. differential pressure / Max. Druckgefälle / Chute de pression maxi / Presion diferencial maxima		Max. supply pressure / Max. Eingangsdruck / Pression maxi entrée / Presion maxima de alimentacion		Max. torque / Max. Drehmoment / Couple maxi / Torque Maximo		Max. performance / Max. Leistungabgabe / Puissance de sortie maxi / Potenza meccanica max		Min. starting torque / Min. Anlaufmoment / Couple min. fourni au dé manrage / Torque minimo de arranque	
	cm³/rev in³/rev	rev/min	***cont / int**** **l/min** g/min		***cont / int**** **bar** psid		***max*** **bar** psig	***cont / int**** **Nm** lb-in		***max*** **KW** HP	***cont / int**** **Nm** lb-in	
TH 0140	**141** 8.6	660	**76** 20	**95** 25	**207** 3000	**276** 4000	**300** 4350	**390** 3455	**530** 4692	**33** 45	**315** 2791	**418** 3706
TH 0170	**169** 10.3	554	**76** 20	**95** 25	**207** 3000	**276** 4000	**300** 4350	**476** 4216	**646** 5714	**33** 45	**376** 3331	**505** 4469
TH 0195	**195** 11.9	477	**76** 20	**95** 25	**207** 3000	**276** 4000	**300** 4350	**556** 4919	**753** 6663	**33** 45	**451** 3989	**611** 5408
TH 0240	**238** 14.5	393	**76** 20	**95** 25	**207** 3000	**276** 4000	**300** 4350	**677** 5991	**913** 8081	**32** 44	**582** 5152	**776** 6865
TH 0280	**280** 17.1	334	**76** 20	**95** 25	**207** 3000	**276** 4000	**300** 4350	**796** 7044	**1073** 9499	**31** 42	**675** 5972	**870** 7699
TH 0310	**310** 18.9	303	**76** 20	**95** 25	**207** 3000	**276** 4000	**300** 4350	**964** 8533	**1297** 11479	**30** 41	**843** 7458	**1117** 9889
TH 0335	**337** 20.6	277	**76** 20	**95** 25	**207** 3000	**276** 4000	**300** 4350	**924** 8184	**1229** 10817	**31** 41	**778** 6882	**1005** 8893
TH 0405	**405** 24.7	232	**76** 20	**95** 25	**172** 2500	**241** 3500	**300** 4350	**942** 8336	**1342** 11877	**27** 37	**791** 7002	**1145** 10133
TH 0475	**477** 29.1	237	**76** 20	**114** 30	**138** 2000	**207** 3000	**300** 4350	**887** 7853	**1372** 12145	**28** 38	**740** 6549	**1120** 9909
TH 0530	**528** 32.3	213	**76** 20	**114** 30	**138** 2000	**172** 2500	**300** 4350	**983** 8701	**1253** 11086	**23** 31	**874** 7737	**1091** 9657
TH 0625	**623** 38.0	182	**76** 20	**114** 30	**121** 1750	**155** 2250	**300** 4350	**986** 8727	**1291** 11424	**20** 27	**895** 7924	**1165** 10312
TH 0785	**786** 48.0	143	**76** 20	**114** 30	**103** 1500	**138** 2000	**300** 4350	**1044** 9239	**1428** 12636	**17** 23	**991** 8772	**1341** 11876
TH 0960	**959** 58.5	118	**76** 20	**114** 30	**69** 1000	**103** 1500	**300** 4350	**773** 6843	**1268** 11227	**12** 16	**763** 6752	**1177** 10419

Performance data based on testing using 10W40 oil with a viscosity of 200 SUS at 54° C (130° F.). Performance data is typical. Actual data may vary slightly from one production motor to another.

Les donnees sur les performances sont basees sur des tests utilisant de l'huile 10W40 d'une viscosite de 200 SUS a 54°C (130°F). Ces donnees correspondent a des situations typiques. Les donnees reelles peuvent varier legerement d'un moteur de production a l'autre.

Leistungsdaten sind gemessen mit SAE 10W40 bei einer Viskositaet von 43,1 Cst bei 54°C. Geringfuegige Abweichungen von den Katalogdaten sind moeglich.

Datos tecnicos obtenidos con aceite 10W40 de 200 SUS de viscosidad a 54°C (130°F). Los datos proporcionados son valores tipcos. Los valores exactos reales podrian tener una pequena variacion entre distintos motores.

* Intermittent operation rating applies to 10% of every minute.
Intermittierende Werte maximal 10% von jeder Betriebsminute.
Fonctionnement interm. 10% max. de chaque minute d`utilisation.
Capacidad de funcionamiento intermitente valida para 10% por cada minuto.

TH 0140

8.6 cu in / rev

PRESSURE (PSID)

Flow (GPM)	500	1000	1500	2000	2500	3000	3500	4000
.5	519 **9**	1060 **4**						
1	540 **22**	1090 **17**	1635 **11**	2180 **6**				
2	569 **49**	1156 **43**	1730 **36**	2286 **30**	2827 **23**	3368 **19**	3899 **12**	4447 **12**
3	565 **75**	1159 **69**	1744 **62**	2321 **55**	2899 **47**	3477 **40**	4048 **33**	4608 **29**
4	564 **102**	1170 **94**	1768 **87**	2358 **80**	2943 **72**	3517 **64**	4082 **57**	4644 **52**
5	556 **128**	1170 **120**	1776 **112**	2375 **105**	2968 **97**	3556 **89**	4135 **81**	4701 **76**
7	540 **182**	1160 **172**	1779 **164**	2390 **155**	2994 **146**	3592 **138**	4181 **130**	4763 **123**
9	515 **235**	1143 **225**	1768 **215**	2385 **206**	2996 **196**	3601 **187**	4199 **179**	4794 **171**
12	471 **315**	1096 **303**	1729 **292**	2356 **281**	2974 **271**	3587 **261**	4193 **252**	4794 **243**
15	418 **395**	1042 **381**	1673 **368**	2307 **357**	2933 **346**	3549 **336**	4163 **325**	4771 **314**
20	299 **528**	931 **512**	1565 **497**	2198 **484**	2825 **472**	3455 **459**	4078 **447**	4692 **435**
25	173 **660**	794 **643**	1426 **626**	2059 **612**	2695 **598**	3332 **583**	3961 **569**	4579 **555**

TORQUE (LB IN) 3332
SPEED (RPM) 583

141 cc / rev

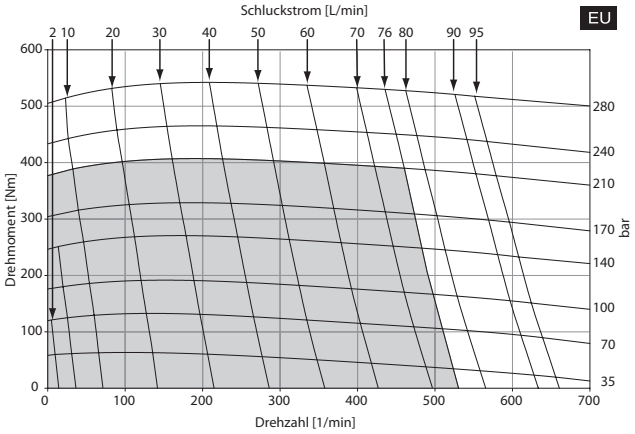

Cont. Int.

Intermittent operation rating applies to 10% of every minute.

Fonctionnement interm. 10% max. de chaque minute d`utilisation.

Performance data based on testing using 10W40 oil with a viscosity of 200 SUS at 54° C (130° F.). Performance data is typical. Actual data may vary slightly from one production motor to another.

Les donnees sur les performances sont basees sur des tests utilisant de l'huile 10W40 d'une viscosite de 200 SUS a 54°C (130°F). Ces donnees correspondent a des situations typiques. Les donnees reelles peuvent varier legerement d'un moteur de production a l'autre.

Intermittierende Werte maximal 10% von jeder Betriebsminute.

Capacidad de funcionamiento intermitente valida para 10% por cada minuto.

Leistungsdaten sind gemessen mit SAE 10W40 bei einer Viskositaet von 43,1 Cst bei 54ºC. Geringfuegige Abweichungen von den Katalogdaten sind moeglich.

Datos tecnicos obtenidos con aceite 10W40 de 200 SUS de viscosidad a 54°C (130°F). Los datos proporcionados son valores tipcos. Los valores exactos reales podrian tener una pequena variacion entre distintos motores.

TH 0170

10.3 cu in / rev

PRESSURE (PSID)

Flow (GPM)	500	1000	1500	2000	2500	3000	3500	4000
.5	620 **9**	1284 **7**	1945 **5**	2613 **4**	3293 **3**	3983 **2**		
1	652 **20**	1337 **18**	2006 **16**	2683 **14**	3375 **12**	4063 **11**	4744 **8**	5402 **8**
2	678 **42**	1390 **40**	2105 **37**	2822 **35**	3535 **32**	4226 **30**	4909 **27**	5587 **25**
3	678 **64**	1397 **61**	2117 **58**	2836 **56**	3554 **53**	4263 **50**	4963 **46**	5652 **44**
4	679 **86**	1409 **83**	2142 **80**	2872 **77**	3596 **74**	4310 **71**	5021 **67**	5716 **64**
5	675 **108**	1413 **104**	2150 **101**	2885 **98**	3616 **94**	4339 **91**	5057 **87**	5761 **83**
7	661 **153**	1405 **148**	2152 **143**	2900 **140**	3642 **136**	4374 **132**	5101 **127**	5818 **123**
9	632 **197**	1385 **191**	2140 **186**	2891 **181**	3638 **177**	4380 **173**	5114 **168**	5838 **163**
12	583 **263**	1334 **256**	2096 **250**	2860 **244**	3617 **239**	4362 **234**	5101 **228**	5823 **223**
15	524 **330**	1275 **322**	2035 **314**	2804 **308**	3572 **302**	4327 **296**	5070 **289**	5801 **283**
20	382 **442**	1143 **432**	1908 **422**	2683 **413**	3455 **406**	4216 **399**	4972 **391**	5714 **383**
25	239 **554**	983 **543**	1747 **531**	2523 **520**	3299 **511**	4071 **501**	4839 **492**	5591 **483**

TORQUE (LB IN) 4839
SPEED (RPM) 492

169 cc / rev

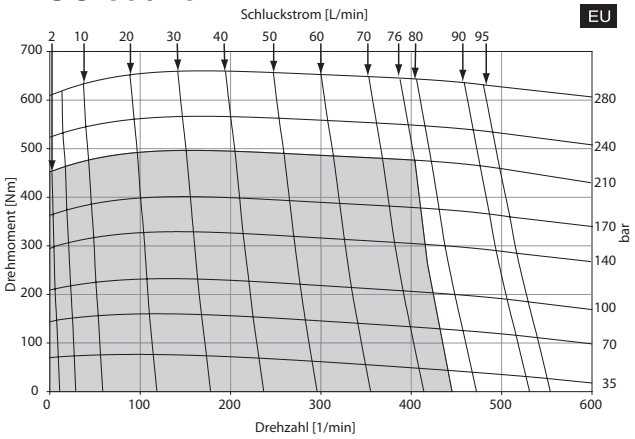

Cont. Int.

Intermittent operation rating applies to 10% of every minute.

Fonctionnement interm. 10% max. de chaque minute d`utilisation.

Performance data based on testing using 10W40 oil with a viscosity of 200 SUS at 54° C (130° F.). Performance data is typical. Actual data may vary slightly from one production motor to another.

Les donnees sur les performances sont basees sur des tests utilisant de l'huile 10W40 d'une viscosite de 200 SUS a 54°C (130°F). Ces donnees correspondent a des situations typiques. Les donnees reelles peuvent varier legerement d'un moteur de production a l'autre.

Intermittierende Werte maximal 10% von jeder Betriebsminute.

Capacidad de funcionamiento intermitente valida para 10% por cada minuto.

Leistungsdaten sind gemessen mit SAE 10W40 bei einer Viskositaet von 43,1 Cst bei 54ºC. Geringfuegige Abweichungen von den Katalogdaten sind moeglich.

Datos tecnicos obtenidos con aceite 10W40 de 200 SUS de viscosidad a 54°C (130°F). Los datos proporcionados son valores tipcos. Los valores exactos reales podrian tener una pequena variacion entre distintos motores.

TH 0195

11.9 cu in / rev

PRESSURE (PSID)

Flow (GPM)	500	1000	1500	2000	2500	3000	3500	4000
.5	733 **7**	1503 **3**						
1	761 **16**	1546 **13**	2326 **8**	3104 **3**				
2	799 **35**	1638 **32**	2465 **27**	3270 **21**	4046 **16**	4813 **11**	5589 **7**	6375 **6**
3	794 **55**	1639 **50**	2476 **45**	3303 **39**	4132 **34**	4970 **28**	5792 **23**	6595 **19**
4	794 **74**	1654 **69**	2509 **64**	3356 **58**	4196 **52**	5023 **46**	5830 **40**	6635 **35**
5	783 **93**	1653 **88**	2517 **83**	3375 **76**	4224 **70**	5065 **64**	5895 **58**	6710 **52**
7	762 **131**	1637 **126**	2514 **120**	3384 **113**	4245 **106**	5098 **99**	5940 **92**	6772 **86**
9	731 **170**	1616 **164**	2499 **157**	3373 **150**	4239 **142**	5093 **135**	5936 **127**	6774 **120**
12	677 **228**	1562 **221**	2455 **213**	3343 **205**	4217 **196**	5081 **188**	5934 **179**	6776 **172**
15	613 **285**	1498 **278**	2389 **269**	3283 **260**	4169 **251**	5040 **242**	5907 **232**	6765 **233**
20	448 **381**	1350 **373**	2245 **363**	3141 **353**	4031 **342**	4919 **331**	5798 **321**	6663 **310**
25	334 **477**	1158 **468**	2044 **457**	2941 **445**	3837 **433**	4729 **421**	5612 **409**	6500 **397**

TORQUE (LB IN) 5612
SPEED (RPM) 409

195 cc / rev

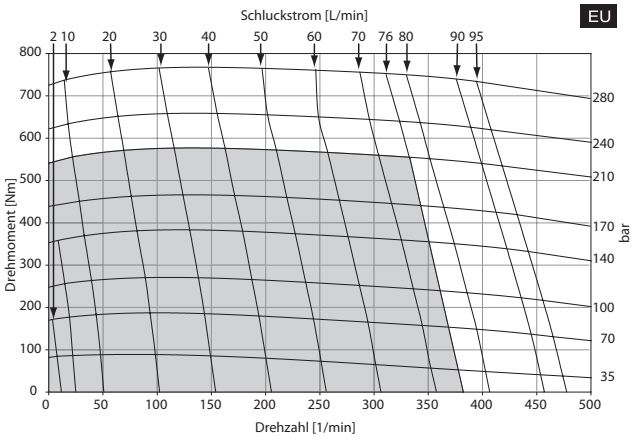

Cont. Int.

Intermittent operation rating applies to 10% of every minute.

Fonctionnement interm. 10% max. de chaque minute d`utilisation.

Performance data based on testing using 10W40 oil with a viscosity of 200 SUS at 54° C (130° F.). Performance data is typical. Actual data may vary slightly from one production motor to another.

Les donnees sur les performances sont basees sur des tests utilisant de l'huile 10W40 d'une viscosite de 200 SUS a 54°C (130°F). Ces donnees correspondent a des situations typiques. Les donnees reelles peuvent varier legerement d'un moteur de production a l'autre.

Intermittierende Werte maximal 10% von jeder Betriebsminute.

Capacidad de funcionamiento intermitente valida para 10% por cada minuto.

Leistungsdaten sind gemessen mit SAE 10W40 bei einer Viskositaet von 43,1 Cst bei 54ºC. Geringfuegige Abweichungen von den Katalogdaten sind moeglich.

Datos tecnicos obtenidos con aceite 10W40 de 200 SUS de viscosidad a 54°C (130°F). Los datos proporcionados son valores tipcos. Los valores exactos reales podrian tener una pequena variacion entre distintos motores.

TH 0240

14.5 cu in / rev

PRESSURE (PSID)

Flow (GPM)	500	1000	1500	2000	2500	3000	3500	4000
.5	932 **6**	1907 **4**	2894 **2**					
1	960 **14**	1954 **12**	2950 **9**	3943 **6**	4939 **3**	5930 **2**		
2	988 **30**	2031 **27**	3065 **24**	4090 **20**	5107 **17**	6100 **14**	7068 **11**	8037 **9**
3	983 **45**	2029 **42**	3071 **39**	4101 **35**	5128 **31**	6161 **27**	7182 **23**	8184 **20**
4	978 **61**	2037 **58**	3090 **54**	4136 **49**	5176 **45**	6207 **42**	7230 **37**	8234 **33**
5	962 **77**	2030 **73**	3092 **69**	4144 **64**	5190 **60**	6231 **56**	7259 **51**	8271 **47**
7	933 **108**	2005 **104**	3078 **99**	4141 **94**	5194 **89**	6239 **84**	7275 **78**	8298 **73**
9	890 **140**	1972 **135**	3048 **129**	4112 **123**	5169 **117**	6213 **112**	7245 **106**	8271 **100**
12	832 **187**	1912 **181**	2996 **175**	4071 **167**	5125 **161**	6163 **154**	7195 **147**	8224 **140**
15	753 **235**	1832 **228**	2921 **220**	4009 **212**	5081 **204**	6137 **196**	7182 **188**	8212 **180**
20	559 **314**	1654 **306**	2744 **297**	3834 **287**	4917 **278**	5991 **268**	7045 **258**	8081 **248**
25	524 **393**	1427 **384**	2507 **373**	3595 **363**	4690 **352**	5780 **340**	6853 **328**	7913 **317**

TORQUE (LB IN) 5780
SPEED (RPM) 340

238 cc / rev

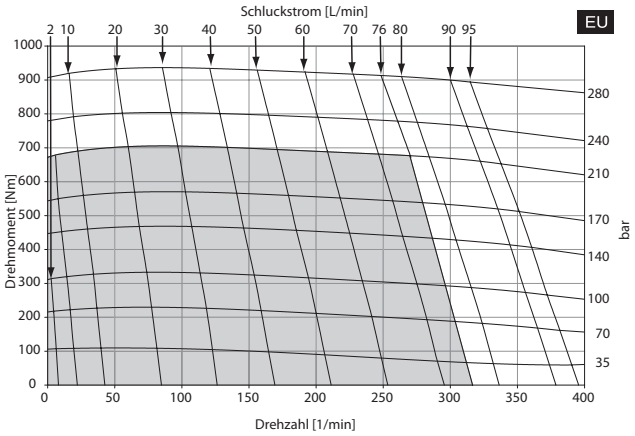

■ Cont. □ Int.

Intermittent operation rating applies to 10% of every minute.

Fonctionnement interm. 10% max. de chaque minute d`utilisation.

Performance data based on testing using 10W40 oil with a viscosity of 200 SUS at 54° C (130° F.). Performance data is typical. Actual data may vary slightly from one production motor to another.

Les donnees sur les performances sont basees sur des tests utilisant de l'huile 10W40 d'une viscosite de 200 SUS a 54°C (130°F). Ces donnees correspondent a des situations typiques. Les donnees reelles peuvent varier legerement d'un moteur de production a l'autre.

Intermittierende Werte maximal 10% von jeder Betriebsminute.

Capacidad de funcionamiento intermitente valida para 10% por cada minuto.

Leistungsdaten sind gemessen mit SAE 10W40 bei einer Viskositaet von 43,1 Cst bei 54ºC. Geringfuegige Abweichungen von den Katalogdaten sind moeglich.

Datos tecnicos obtenidos con aceite 10W40 de 200 SUS de viscosidad a 54°C (130°F). Los datos proporcionados son valores tipcos. Los valores exactos reales podrian tener una pequena variacion entre distintos motores.

TH 0280

17.1 cu in / rev

PRESSURE (PSID)

Flow (GPM)	500	1000	1500	2000	2500	3000	3500	4000
.5	1056 **5**	2177 **4**	3323 **2**	4512 **1**				
1	1087 **12**	2223 **10**	3378 **8**	4552 **6**	5734 **5**	6930 **3**	8135 **3**	9350 **2**
2	1124 **25**	2313 **23**	3513 **21**	4700 **18**	5880 **16**	7060 **14**	8239 **12**	9400 **11**
3	1124 **39**	2323 **36**	3532 **34**	4740 **31**	5940 **28**	7143 **25**	8346 **22**	9536 **19**
4	1126 **52**	2346 **49**	3568 **47**	4786 **43**	6004 **40**	7214 **37**	8415 **33**	9596 **30**
5	1115 **65**	2350 **62**	3582 **59**	4816 **56**	6044 **52**	7256 **49**	8457 **45**	9641 **41**
7	1091 **92**	2338 **88**	3586 **85**	4832 **80**	6072 **76**	7301 **72**	8515 **67**	9706 **63**
9	1046 **118**	2309 **114**	3564 **110**	4811 **105**	6051 **101**	7280 **96**	8499 **90**	9707 **85**
12	981 **159**	2242 **154**	3506 **148**	4757 **143**	5992 **137**	7221 **132**	8444 **125**	9652 **118**
15	898 **199**	2164 **193**	3437 **186**	4702 **180**	5951 **174**	7187 **168**	8416 **160**	9625 **152**
20	691 **266**	1976 **258**	3255 **250**	4529 **243**	5795 **235**	7044 **227**	8275 **218**	9499 **209**
25	703 **334**	1726 **324**	2987 **314**	4260 **305**	5540 **296**	6815 **286**	8071 **276**	9311 **267**

TORQUE (LB IN) 8071
SPEED (RPM) 276

280 cc / rev

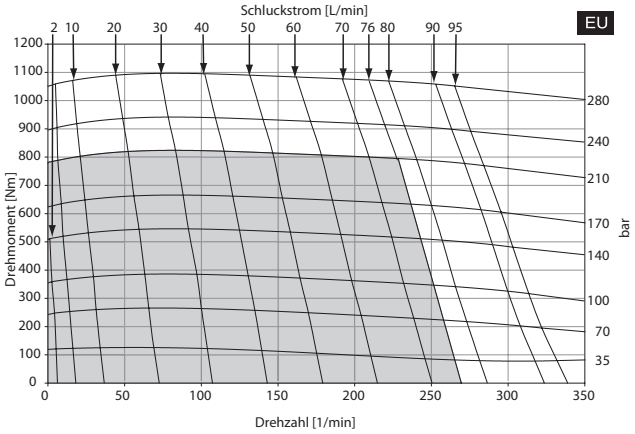

Cont. Int.

Intermittent operation rating applies to 10% of every minute.

Fonctionnement interm. 10% max. de chaque minute d`utilisation.

Performance data based on testing using 10W40 oil with a viscosity of 200 SUS at 54° C (130° F.). Performance data is typical. Actual data may vary slightly from one production motor to another.

Les donnees sur les performances sont basees sur des tests utilisant de l'huile 10W40 d'une viscosite de 200 SUS a 54°C (130°F). Ces donnees correspondent a des situations typiques. Les donnees reelles peuvent varier legerement d'un moteur de production a l'autre.

Intermittierende Werte maximal 10% von jeder Betriebsminute.

Capacidad de funcionamiento intermitente valida para 10% por cada minuto.

Leistungsdaten sind gemessen mit SAE 10W40 bei einer Viskositaet von 43,1 Cst bei 54ºC. Geringfuegige Abweichungen von den Katalogdaten sind moeglich.

Datos tecnicos obtenidos con aceite 10W40 de 200 SUS de viscosidad a 54°C (130°F). Los datos proporcionados son valores tipcos. Los valores exactos reales podrian tener una pequena variacion entre distintos motores.

TH 0310

18.9 cu in / rev

PRESSURE (PSID)

Flow (GPM)	500	1000	1500	2000	2500	3000	3500	4000
.5	1188 **4**	2464 **3**	3766 **2**	5102 **1**				
1	1220 **11**	2508 **9**	3812 **7**	5145 **5**	6477 **4**	7822 **2**	9181 **2**	10530 **1**
2	1259 **23**	2598 **21**	3950 **19**	5298 **17**	6642 **14**	7972 **13**	9282 **10**	10574 **9**
3	1257 **35**	2606 **33**	3889 **30**	5332 **28**	6688 **25**	8044 **22**	9392 **19**	10693 **16**
4	1259 **47**	2628 **44**	4003 **42**	5377 **39**	6749 **36**	8114 **33**	9461 **29**	10780 **26**
5	1247 **59**	2629 **56**	4252 **52**	5401 **50**	6782 **47**	8149 **42**	9499 **39**	10823 **35**
7	1218 **84**	2614 **80**	4013 **76**	5413 **72**	6806 **68**	8184 **64**	9543 **60**	10874 **56**
9	1167 **107**	2574 **103**	3983 **99**	5386 **94**	6780 **90**	8162 **85**	9529 **80**	10877 **75**
12	1089 **143**	2493 **139**	3904 **133**	5308 **128**	6696 **122**	8075 **117**	9443 **110**	10793 **102**
15	995 **180**	2400 **173**	3817 **167**	5225 **160**	6621 **154**	8003 **148**	9371 **140**	10718 **131**
20	769 **241**	2194 **234**	3618 **225**	5043 **218**	6462 **210**	7863 **203**	9238 **194**	10588 **183**
25	626 **303**	1955 **294**	3359 **284**	4771 **274**	6251 **265**	7608 **256**	8998 **246**	10360 **236**

TORQUE (LB IN) 7608
SPEED (RPM) 256

310 cc / rev

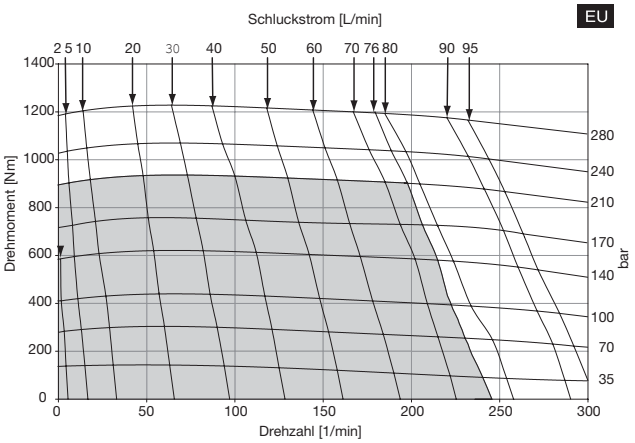

Cont. Int.

Intermittent operation rating applies to 10% of every minute.

Fonctionnement interm. 10% max. de chaque minute d`utilisation.

Performance data based on testing using 10W40 oil with a viscosity of 200 SUS at 54° C (130° F.). Performance data is typical. Actual data may vary slightly from one production motor to another.

Les donnees sur les performances sont basees sur des tests utilisant de l'huile 10W40 d'une viscosite de 200 SUS a 54°C (130°F). Ces donnees correspondent a des situations typiques. Les donnees reelles peuvent varier legerement d'un moteur de production a l'autre.

Intermittierende Werte maximal 10% von jeder Betriebsminute.

Capacidad de funcionamiento intermitente valida para 10% por cada minuto.

Leistungsdaten sind gemessen mit SAE 10W40 bei einer Viskositaet von 43,1 Cst bei 54ºC. Geringfuegige Abweichungen von den Katalogdaten sind moeglich.

Datos tecnicos obtenidos con aceite 10W40 de 200 SUS de viscosidad a 54°C (130°F). Los datos proporcionados son valores tipcos. Los valores exactos reales podrian tener una pequena variacion entre distintos motores.

TH 0335

20.6 cu in / rev

PRESSURE (PSID)

	500	1000	1500	2000	2500	3000	3500	4000
.5	1297 **4**	2699 **3**	4128 **1**	5584 **1**				
1	1329 **10**	2741 **8**	4176 **7**	5630 **5**	7084 **4**	8551 **2**	10036 **2**	11496 **1**
2	1369 **21**	2832 **19**	4308 **17**	5787 **15**	7265 **13**	8718 **11**	10136 **9**	11534 **8**
3	1366 **32**	2838 **30**	4326 **27**	5817 **25**	7301 **22**	8781 **20**	10248 **17**	11685 **14**
4	1368 **43**	2858 **40**	4358 **38**	5861 **35**	7358 **32**	8850 **29**	10317 **25**	11748 **22**
5	1355 **54**	2858 **51**	4368 **48**	5880 **45**	7386 **42**	8880 **38**	10352 **34**	11791 **30**
7	1323 **76**	2840 **73**	4363 **69**	5888 **65**	7407 **61**	8908 **57**	10384 **53**	11829 **47**
9	1266 **98**	2791 **94**	4326 **90**	5856 **85**	7376 **81**	8884 **76**	10372 **71**	11834 **64**
12	1177 **131**	2698 **127**	4230 **121**	5759 **116**	7273 **110**	8773 **105**	10261 **98**	11726 **90**
15	1075 **165**	2594 **159**	4127 **153**	5654 **146**	7170 **140**	8670 **134**	10153 **126**	11613 **116**
20	833 **221**	2372 **214**	3915 **205**	5463 **197**	7008 **189**	8533 **182**	10026 **173**	11479 **161**
25	678 **277**	2142 **269**	3663 **259**	5189 **248**	6726 **239**	8257 **230**	9757 **219**	11219 **209**

Flow (GPM)

TORQUE (LB IN) 9757
SPEED (RPM) 219

337 cc / rev

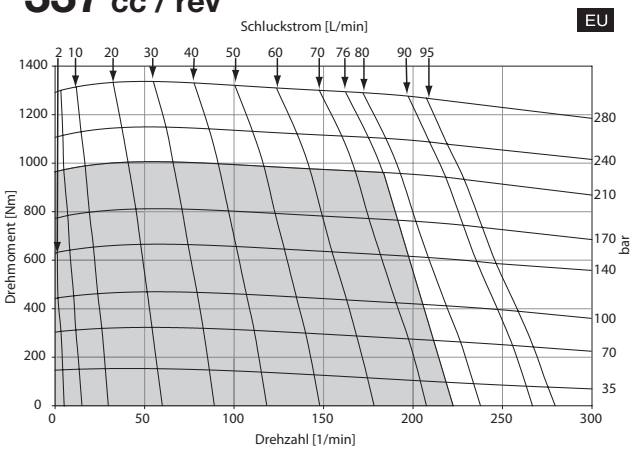

Cont. Int.

Intermittent operation rating applies to 10% of every minute.

Fonctionnement interm. 10% max. de chaque minute d`utilisation.

Performance data based on testing using 10W40 oil with a viscosity of 200 SUS at 54° C (130° F.). Performance data is typical. Actual data may vary slightly from one production motor to another.

Les donnees sur les performances sont basees sur des tests utilisant de l'huile 10W40 d'une viscosite de 200 SUS a 54°C (130°F). Ces donnees correspondent a des situations typiques. Les donnees reelles peuvent varier legerement d'un moteur de production a l'autre.

Intermittierende Werte maximal 10% von jeder Betriebsminute.

Capacidad de funcionamiento intermitente valida para 10% por cada minuto.

Leistungsdaten sind gemessen mit SAE 10W40 bei einer Viskositaet von 43,1 Cst bei 54ºC. Geringfuegige Abweichungen von den Katalogdaten sind moeglich.

Datos tecnicos obtenidos con aceite 10W40 de 200 SUS de viscosidad a 54°C (130°F). Los datos proporcionados son valores tipcos. Los valores exactos reales podrian tener una pequena variacion entre distintos motores.

TH 0405

24.7 cu in / rev

PRESSURE (PSID)

Flow (GPM)	500	1000	1500	2000	2500	3000	3500
.5	1544 **4**	3178 **3**	4840 **2**	6515 **1**	8185 **1**		
1	1593 **8**	3256 **7**	4928 **6**	6607 **6**	8303 **5**	9987 **4**	11652 **3**
2	1636 **17**	3351 **16**	5084 **15**	6817 **14**	8550 **13**	10272 **12**	11978 **11**
3	1637 **27**	3365 **25**	5106 **23**	6847 **22**	8588 **21**	10314 **19**	12031 **18**
4	1645 **36**	3394 **34**	5159 **32**	6920 **30**	8668 **29**	10402 **27**	12130 **26**
5	1640 **45**	3408 **43**	5201 **41**	6983 **39**	8733 **37**	10466 **35**	12194 **33**
7	1606 **64**	3396 **61**	5211 **59**	7003 **56**	8772 **54**	10527 **51**	12271 **49**
9	1551 **82**	3350 **80**	5176 **77**	6981 **73**	8763 **70**	10519 **67**	12269 **64**
12	1428 **110**	3238 **107**	5075 **103**	6888 **99**	8670 **95**	10424 **91**	12172 **88**
15	1310 **138**	3112 **135**	4948 **130**	6759 **125**	8545 **120**	10306 **115**	12060 **111**
20	1136 **185**	2862 **181**	4692 **175**	6518 **168**	8336 **162**	10122 **156**	11877 **151**
25			4492 **219**	6303 **212**	8084 **204**	9848 **197**	11585 **190**

TORQUE (LB IN) 9848
SPEED (RPM) 197

405 cc / rev

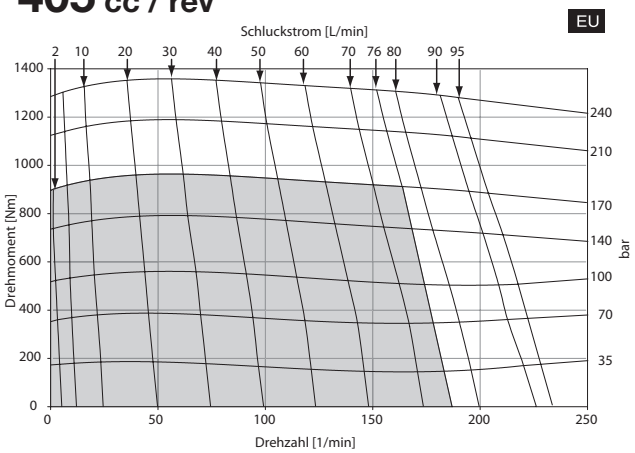

Cont. Int.

Intermittent operation rating applies to 10% of every minute.

Fonctionnement interm. 10% max. de chaque minute d`utilisation.

Performance data based on testing using 10W40 oil with a viscosity of 200 SUS at 54° C (130° F.). Performance data is typical. Actual data may vary slightly from one production motor to another.

Les donnees sur les performances sont basees sur des tests utilisant de l'huile 10W40 d'une viscosite de 200 SUS a 54°C (130°F). Ces donnees correspondent a des situations typiques. Les donnees reelles peuvent varier legerement d'un moteur de production a l'autre.

Intermittierende Werte maximal 10% von jeder Betriebsminute.

Capacidad de funcionamiento intermitente valida para 10% por cada minuto.

Leistungsdaten sind gemessen mit SAE 10W40 bei einer Viskositaet von 43,1 Cst bei 54ºC. Geringfuegige Abweichungen von den Katalogdaten sind moeglich.

Datos tecnicos obtenidos con aceite 10W40 de 200 SUS de viscosidad a 54°C (130°F). Los datos proporcionados son valores tipcos. Los valores exactos reales podrian tener una pequena variacion entre distintos motores.

TH 0475

29.1 cu in / rev

PRESSURE (PSID)

	500	1000	1500	2000	2500	3000
.5	1768 **3**	3732 **3**	5733 **2**	7744 **1**	9762 **1**	
1	1868 **7**	3878 **7**	5879 **6**	7851 **5**	9838 **4**	11830 **3**
2	1964 **15**	4055 **14**	6180 **14**	8237 **12**	10241 **10**	12136 **8**
3	1972 **23**	4074 **22**	6208 **21**	8321 **19**	10379 **17**	12355 **13**
4	2005 **31**	4135 **30**	6287 **29**	8382 **27**	10463 **24**	12496 **20**
5	2004 **39**	4129 **38**	6304 **37**	8428 **34**	10514 **31**	12544 **26**
7	1990 **55**	4133 **54**	6308 **52**	8445 **50**	10555 **45**	12602 **40**
9	1924 **70**	4104 **69**	6285 **68**	8430 **65**	10528 **60**	12608 **54**
12	1775 **94**	3974 **93**	6157 **91**	8328 **87**	10446 **82**	12528 **75**
15	1619 **118**	3784 **116**	5990 **114**	8188 **110**	10311 **104**	12372 **96**
20	1314 **157**	3373 **156**	5629 **153**	7853 **149**	10038 **141**	12145 **132**
25	1141 **197**	3029 **196**	5220 **193**	7427 **189**	9629 **182**	11757 **174**
30	606 **237**	2505 **236**	4649 **233**	6766 **230**	8878 **224**	10989 **219**

Flow (GPM)

TORQUE (LB IN) 6766
SPEED (RPM) 230

477 cc / rev

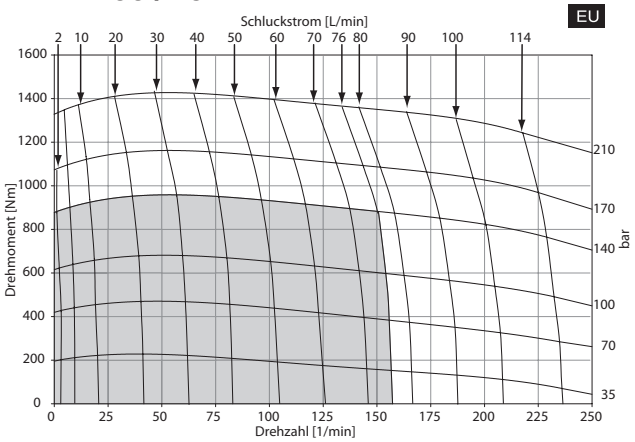

Cont. Int.

Intermittent operation rating applies to 10% of every minute.

Fonctionnement interm. 10% max. de chaque minute d`utilisation.

Performance data based on testing using 10W40 oil with a viscosity of 200 SUS at 54° C (130° F.). Performance data is typical. Actual data may vary slightly from one production motor to another.

Les donnees sur les performances sont basees sur des tests utilisant de l'huile 10W40 d'une viscosite de 200 SUS a 54°C (130°F). Ces donnees correspondent a des situations typiques. Les donnees reelles peuvent varier legerement d'un moteur de production a l'autre.

Intermittierende Werte maximal 10% von jeder Betriebsminute.

Capacidad de funcionamiento intermitente valida para 10% por cada minuto.

Leistungsdaten sind gemessen mit SAE 10W40 bei einer Viskositaet von 43,1 Cst bei 54ºC. Geringfuegige Abweichungen von den Katalogdaten sind moeglich.

Datos tecnicos obtenidos con aceite 10W40 de 200 SUS de viscosidad a 54°C (130°F). Los datos proporcionados son valores tipcos. Los valores exactos reales podrian tener una pequena variacion entre distintos motores.

TH 0530

32.2 cu in / rev

PRESSURE (PSID)

Flow (GPM)	500	1000	1500	2000	2500
.5	2080 **3**	4256 **3**	6479 **2**	8726 **2**	11012 **1**
1	2158 **7**	4372 **6**	6592 **6**	8779 **5**	10994 **4**
2	2246 **14**	4567 **13**	6869 **12**	9126 **11**	11376 **9**
3	2242 **21**	4578 **20**	6916 **19**	9237 **17**	11500 **14**
4	2253 **28**	4625 **27**	6977 **25**	9296 **23**	11586 **20**
5	2235 **35**	4629 **34**	7002 **32**	9333 **29**	11626 **26**
7	2182 **49**	4599 **48**	7006 **46**	9362 **42**	11659 **38**
9	2095 **63**	4535 **62**	6960 **59**	9330 **55**	11650 **50**
12	1943 **85**	4390 **83**	6825 **80**	9217 **75**	11549 **69**
15	1753 **106**	4199 **104**	6638 **100**	9052 **95**	11408 **87**
20	1327 **141**	3783 **139**	6262 **135**	8701 **129**	11086 **120**
25	1011 **177**	3300 **175**	5751 **171**	8210 **165**	10639 **158**
30	269 **213**	2698 **211**	5083 **208**	7415 **203**	9814 **197**

TORQUE (LB IN) 9814
SPEED (RPM) 197

528 cc / rev

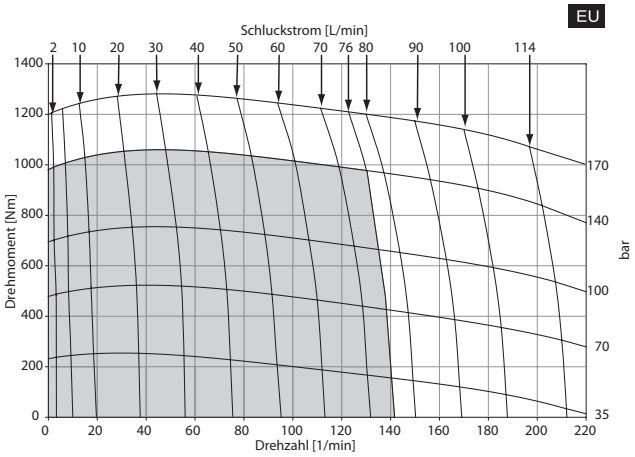

Cont. Int.

Intermittent operation rating applies to 10% of every minute.

Fonctionnement interm. 10% max. de chaque minute d`utilisation.

Performance data based on testing using 10W40 oil with a viscosity of 200 SUS at 54° C (130° F.). Performance data is typical. Actual data may vary slightly from one production motor to another.

Les donnees sur les performances sont basees sur des tests utilisant de l'huile 10W40 d'une viscosite de 200 SUS a 54°C (130°F). Ces donnees correspondent a des situations typiques. Les donnees reelles peuvent varier legerement d'un moteur de production a l'autre.

Intermittierende Werte maximal 10% von jeder Betriebsminute.

Capacidad de funcionamiento intermitente valida para 10% por cada minuto.

Leistungsdaten sind gemessen mit SAE 10W40 bei einer Viskositaet von 43,1 Cst bei 54ºC. Geringfuegige Abweichungen von den Katalogdaten sind moeglich.

Datos tecnicos obtenidos con aceite 10W40 de 200 SUS de viscosidad a 54°C (130°F). Los datos proporcionados son valores tipcos. Los valores exactos reales podrian tener una pequena variacion entre distintos motores.

TH 0625

38.0 cu in / rev

	PRESSURE (PSID) 500	1000	1500	1750	2250
.5	1939 **2**	4593 **1**			
1	2087 **5**	4665 **3**	7283 **2**	8680 **2**	11579 **1**
2	2338 **11**	4991 **9**	7590 **8**	8853 **7**	11458 **5**
3	2386 **17**	5101 **15**	7753 **13**	9055 **12**	11689 **9**
4	2457 **23**	5202 **21**	7872 **19**	9174 **17**	11769 **14**
5	2479 **29**	5246 **27**	7943 **25**	9242 **23**	11821 **18**
7	2464 **41**	5273 **39**	7995 **36**	9306 **34**	11859 **28**
9	2401 **53**	5223 **51**	7993 **48**	9337 **45**	11935 **39**
12	2254 **71**	5092 **69**	7886 **65**	9239 **62**	11900 **54**
15	2052 **89**	4901 **87**	7721 **83**	9086 **80**	11763 **70**
20	1600 **120**	4490 **117**	7334 **112**	8725 **109**	11424 **98**
25	1063 **151**	3933 **148**	6818 **144**	8235 **140**	11021 **131**
30	359 **182**	3250 **180**	6074 **176**	7443 **172**	10179 **165**

Flow (GPM)

TORQUE (LB IN) 7443
SPEED (RPM) 172

623 cc / rev

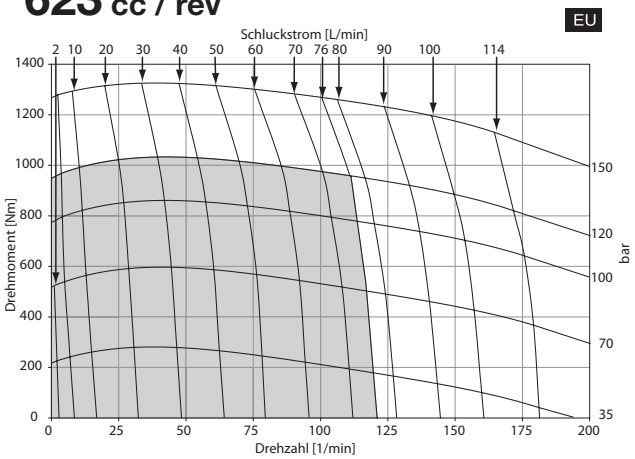

Cont. Int.

Intermittent operation rating applies to 10% of every minute.

Fonctionnement interm. 10% max. de chaque minute d`utilisation.

Performance data based on testing using 10W40 oil with a viscosity of 200 SUS at 54° C (130° F.). Performance data is typical. Actual data may vary slightly from one production motor to another.

Les donnees sur les performances sont basees sur des tests utilisant de l'huile 10W40 d'une viscosite de 200 SUS a 54°C (130°F). Ces donnees correspondent a des situations typiques. Les donnees reelles peuvent varier legerement d'un moteur de production a l'autre.

Intermittierende Werte maximal 10% von jeder Betriebsminute.

Capacidad de funcionamiento intermitente valida para 10% por cada minuto.

Leistungsdaten sind gemessen mit SAE 10W40 bei einer Viskositaet von 43,1 Cst bei 54ºC. Geringfuegige Abweichungen von den Katalogdaten sind moeglich.

Datos tecnicos obtenidos con aceite 10W40 de 200 SUS de viscosidad a 54°C (130°F). Los datos proporcionados son valores tipcos. Los valores exactos reales podrian tener una pequena variacion entre distintos motores.

TH 0785

48.0 cu in / rev

PRESSURE (PSID)

Flow (GPM)	500	1000	1500	2000
.5	2910 **2**	6153 **2**	9607 **1**	12950 **1**
1	3011 **4**	6296 **4**	9670 **3**	12919 **3**
2	3217 **9**	6536 **8**	9935 **7**	13060 **6**
3	3220 **14**	6613 **13**	9977 **11**	13079 **9**
4	3265 **19**	6679 **17**	10021 **15**	13078 **13**
5	3263 **23**	6703 **22**	10047 **19**	13103 **16**
7	3218 **33**	6722 **31**	10068 **28**	13062 **24**
9	3107 **43**	6664 **41**	10108 **36**	13185 **31**
12	2892 **57**	6489 **55**	9959 **49**	13082 **42**
15	2643 **71**	6238 **69**	9733 **62**	12938 **54**
20	2044 **95**	5673 **92**	9239 **85**	12636 **75**
25	2313 **119**	4976 **117**	8571 **110**	12073 **101**
30	496 **143**	4104 **141**	7582 **137**	11024 **130**

TORQUE (LB IN) 11024
SPEED (RPM) 130

786 cc / rev

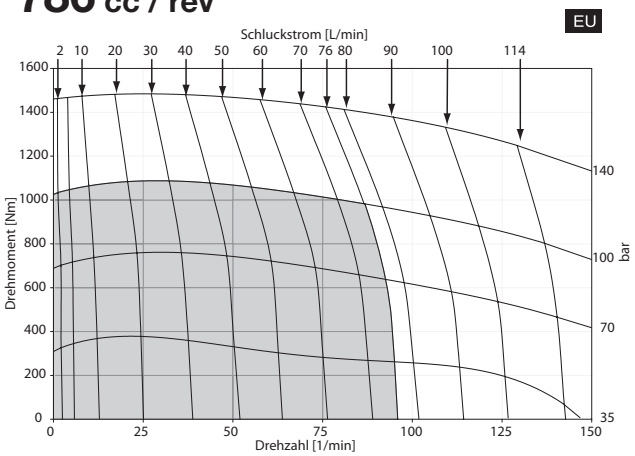

Cont. Int.

Intermittent operation rating applies to 10% of every minute.

Fonctionnement interm. 10% max. de chaque minute d`utilisation.

Performance data based on testing using 10W40 oil with a viscosity of 200 SUS at 54° C (130° F.). Performance data is typical. Actual data may vary slightly from one production motor to another.

Les donnees sur les performances sont basees sur des tests utilisant de l'huile 10W40 d'une viscosite de 200 SUS a 54°C (130°F). Ces donnees correspondent a des situations typiques. Les donnees reelles peuvent varier legerement d'un moteur de production a l'autre.

Intermittierende Werte maximal 10% von jeder Betriebsminute.

Capacidad de funcionamiento intermitente valida para 10% por cada minuto.

Leistungsdaten sind gemessen mit SAE 10W40 bei einer Viskositaet von 43,1 Cst bei 54ºC. Geringfuegige Abweichungen von den Katalogdaten sind moeglich.

Datos tecnicos obtenidos con aceite 10W40 de 200 SUS de viscosidad a 54°C (130°F). Los datos proporcionados son valores tipcos. Los valores exactos reales podrian tener una pequena variacion entre distintos motores.

TH 0960

58.5 cu in / rev

PRESSURE (PSID)

Flow (GPM)	500	1000	1500
.5	3692 **2**	7712 **1**	11750 **1**
1	3788 **3**	7858 **3**	11895 **3**
2	3900 **7**	8045 **7**	12058 **6**
3	3905 **11**	8078 **11**	12135 **10**
4	3939 **15**	8155 **14**	12210 **13**
5	3923 **19**	8173 **18**	12238 **17**
7	3860 **27**	8160 **26**	12262 **24**
9	3733 **35**	8074 **34**	12224 **31**
12	3475 **47**	7848 **45**	12062 **42**
15	3149 **58**	7545 **57**	11823 **53**
20	2437 **78**	6843 **76**	11227 **72**
25	2969 **98**	5990 **96**	10360 **92**
30	603 **118**	4919 **117**	9170 **113**

TORQUE (LB IN) 9170
SPEED (RPM) 113

959 cc / rev

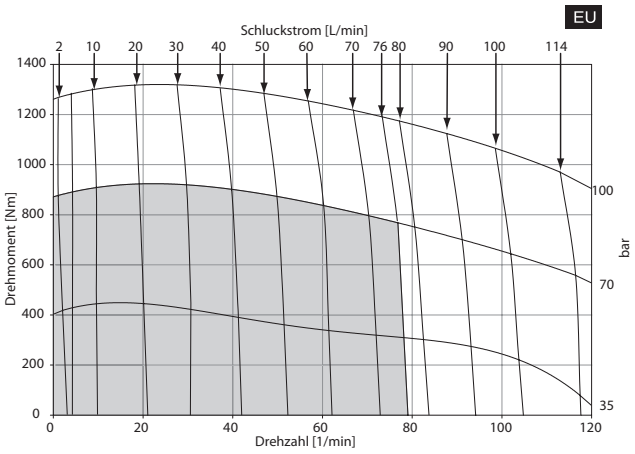

Cont. Int.

Intermittent operation rating applies to 10% of every minute.

Fonctionnement interm. 10% max. de chaque minute d`utilisation.

Performance data based on testing using 10W40 oil with a viscosity of 200 SUS at 54° C (130° F.). Performance data is typical. Actual data may vary slightly from one production motor to another.

Les donnees sur les performances sont basees sur des tests utilisant de l'huile 10W40 d'une viscosite de 200 SUS a 54°C (130°F). Ces donnees correspondent a des situations typiques. Les donnees reelles peuvent varier legerement d'un moteur de production a l'autre.

Intermittierende Werte maximal 10% von jeder Betriebsminute.

Capacidad de funcionamiento intermitente valida para 10% por cada minuto.

Leistungsdaten sind gemessen mit SAE 10W40 bei einer Viskositaet von 43,1 Cst bei 54ºC. Geringfuegige Abweichungen von den Katalogdaten sind moeglich.

Datos tecnicos obtenidos con aceite 10W40 de 200 SUS de viscosidad a 54°C (130°F). Los datos proporcionados son valores tipcos. Los valores exactos reales podrian tener una pequena variacion entre distintos motores.

Flange Mount / Standardgehäuse
Monture à bride(s) / Montaje de brida

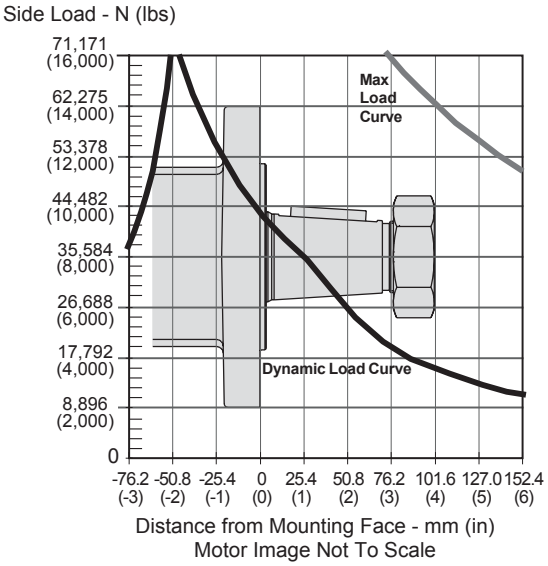

The dynamic side load curve is based on uni-directional steady state loads for L_{10} bearing life at 6 x 10^6 revolutions.
Die zulässige auslegbare radiale Wellenbelastungskurve ist unter ruhenden, einseitig statisch gerichteten Lastverhältnissen auf eine L_{10} Lebensdauer mit 6 x 10^6 Umdrehungen kalkuliert.
La courbe de charge latérale permise se base sur des charges unidirectionnelles en régime permanent pour le roulement L_{10} à 6 x 10^6 révolutions.
La curva de valores admisibles de carga lateral está basada en cargas constantes para cojinetes L_{10} a 6 x 10^6 revoluciones.

Wheel Mount / Radnabengehäuse
Monture à roue / Montaje de rueda

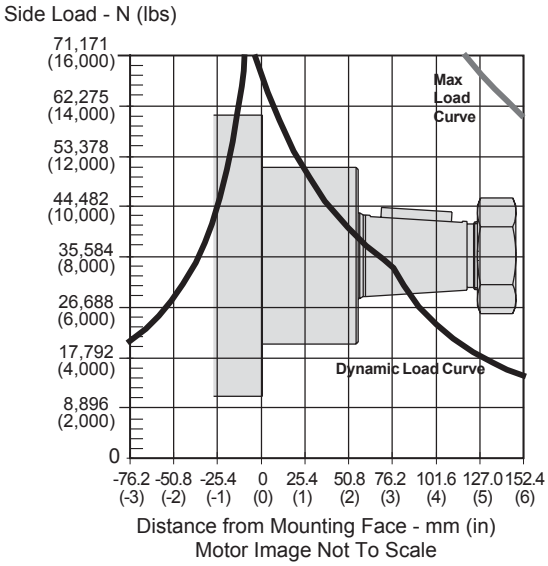

The maximum load curve is defined by bearing static load capacity. This curve should not be exceeded at any time including shock loads.
Die maximale radiale Wellenbelastungskurve ist definiert als maximale statische Last ohne Drehzahl. Sie gilt als Grenze und sollte keinesfalls überschritten werden.
La courbe de charge maximale est définie par la capacité de charge statique portante. Cette courbe ne devrait être dépassée en aucun moment y compris pour les charges par à-coups.
La curva de carga máxima queda definida por la capacidad de carga estática del cojinete. No se deben superar los valores de esta curva, ni siquiera con cargas provisorias de impacto.

Equation to Calculate the Expected Radial Bearing Life
Gleichung zur Ermittlung der Lagerlebensdauer

Equation to calculate the dynamic bearing life for a given load:
Bestimmung der erlaubten radialen Wellenbelastung mit vorgegebener Last

Use F_a, F_b and S in equation to determine hours of L_{10} bearing life.
Die Lebensdauer in Stunden ergibt sich durch einsetzen von F_a, F_b, und S in die nachstehende Formel.

$$L = \frac{6 \times 10^6}{60 \times S} \left\{ \frac{F_a}{F_b} \right\}^{3.33}$$

Where / Mit:

S = Shaft Speed RPM / Abtriebswellendrehzahl in min^{-1}
L = Life In Hours / Lebensdauer in Stunden
F_a = Dynamic side load defined by above curve at a distance from mounting flange. / Erlaubte radiale Wellenbelastung als Function der Laenge
F_b = Application side load. / Anwendungsseitige Wellenbelastung

Note: Calculations are based on L_{10} bearing life per ISO 281.
Auslegung basiert auf einer L_{10} Lenbendauer nach ISO 281.

Code: MS

Magneto, 7/8-14 SAE O-Ring

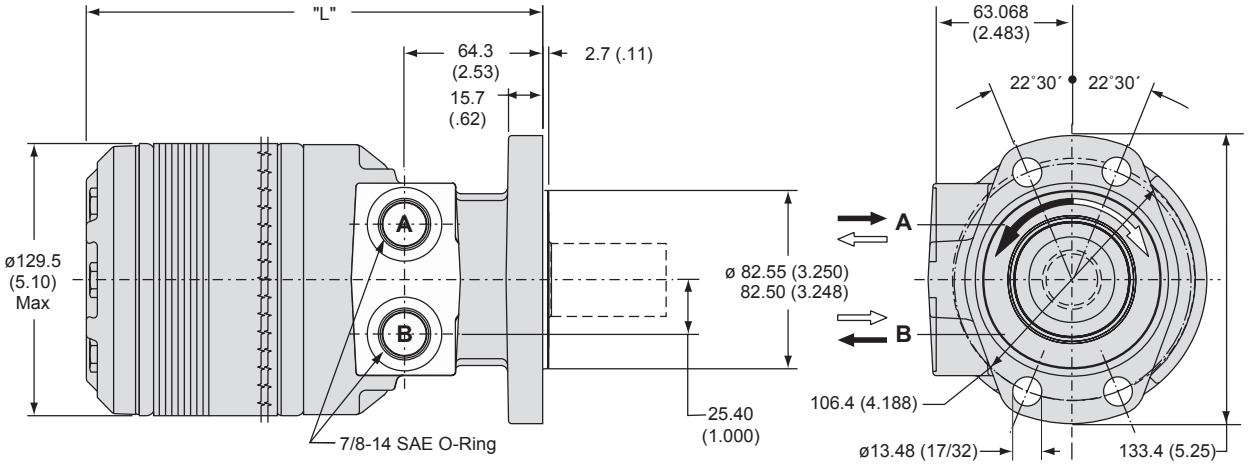

Code MS disp.	0140	0170	0195	0240	0280	0310	0335	0405	0475	0530	0625	0785	0960
Weight/Gewicht kg	**14.7**	**14.9**	**15.2**	**15.5**	**15.9**	**16.3**	**16.1**	**16.9**	**17.6**	**18.3**	**19.0**	**20.6**	**22.3**
Poids/Peso (lb)	(32.3)	(32.8)	(33.4)	(34.2)	(35.1)	(35.9)	(35.4)	(37.3)	(38.7)	(40.4)	(41.9)	(45.4)	(49.1)
Length "L" mm	**216**	**219**	**222**	**227**	**232**	**238**	**235**	**245**	**254**	**260**	**270**	**289**	**308**
"L" (in)	(8.50)	(8.62)	(8.75)	(8.94)	(9.12)	(9.37)	(9.25)	(9.66)	(10.00)	(10.25)	(10.62)	(11.37)	(12.12)

Code: US

Wheel, Standard, 7/8-14 SAE O-Ring

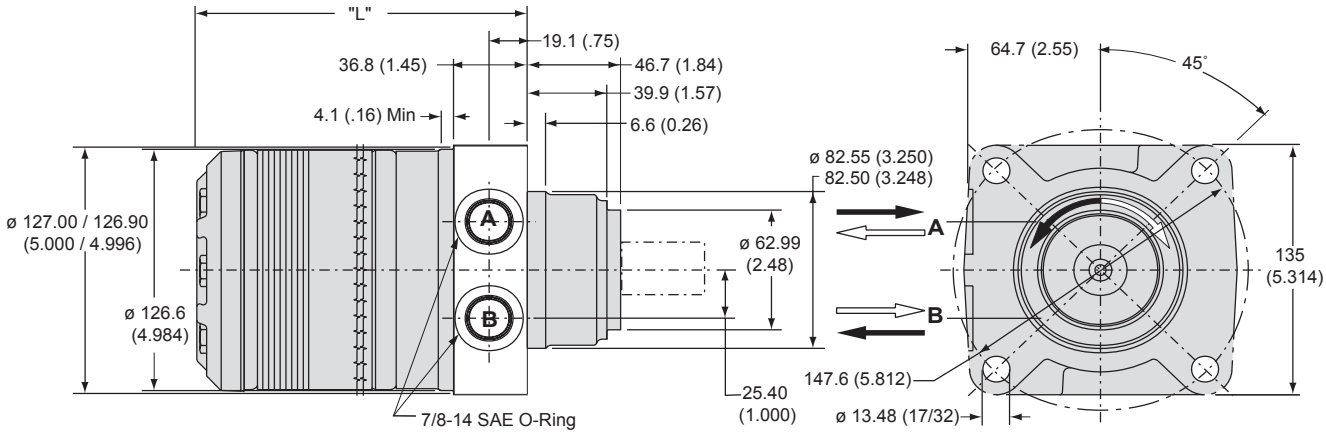

Code US disp.	0140	0170	0195	0240	0280	0310	0335	0405	0475	0530	0625	0785	0960
Weight/Gewicht kg	**16.9**	**17.2**	**17.4**	**17.8**	**18.2**	**18.4**	**18.6**	**19.2**	**19.8**	**20.6**	**21.3**	**22.9**	**24.5**
Poids/Peso (lb)	(37.3)	(37.8)	(38.4)	(39.2)	(40.1)	(40.5)	(40.9)	(42.3)	(43.7)	(45.4)	(46.9)	(50.4)	(54.1)
Length "L" mm	**173**	**177**	**180**	**184**	**189**	**192**	**196**	**203**	**212**	**218**	**227**	**246**	**265**
"L" (in)	(6.82)	(6.95)	(7.07)	(7.26)	(7.45)	(7.55)	(7.70)	(7.99)	(8.32)	(8.57)	(8.95)	(9.70)	(10.45)

English equivalents for metric specifications are shown in ( ).

015 TH.indd, js

Parker Hannifin Corporation
Hydraulic Pump/Motor Division
Greeneville, Tennessee, USA

Code: PA

SAE "B" 4 Bolt, Rear 7/8'14 SAE O-Ring Axial

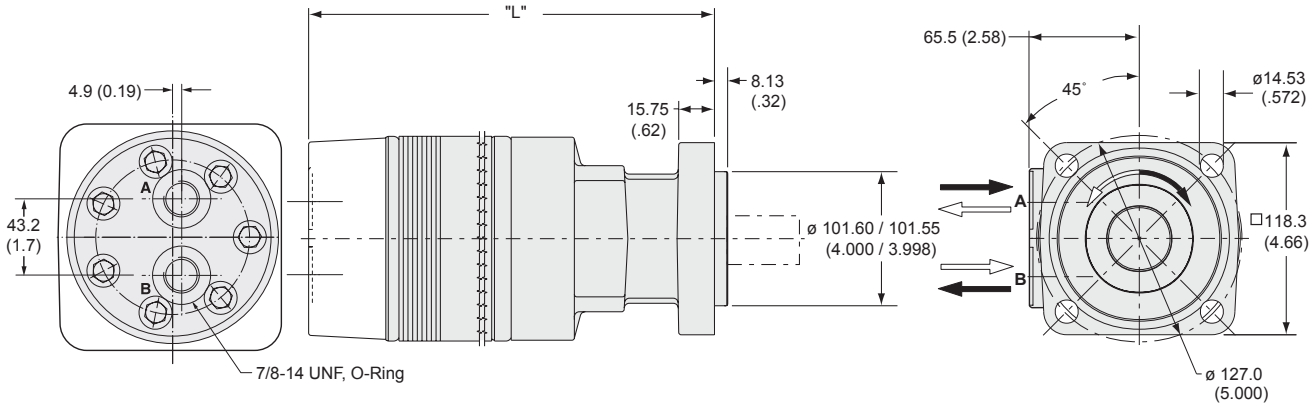

Code PA disp.	0140	0170	0195	0240	0280	0310	0335	0405	0475	0530	0625	0785	0960
Weight/Gewicht kg	**16.9**	**17.2**	**17.4**	**17.8**	**18.2**	**18.4**	**18.6**	**19.2**	**19.8**	**20.6**	**21.3**	**22.9**	**24.5**
Poids/Peso (lb)	(37.3)	(37.8)	(38.4)	(39.2)	(40.1)	(40.5)	(40.9)	(42.3)	(43.7)	(45.4)	(46.9)	(50.4)	(54.1)
Length "L" mm	**235**	**238**	**242**	**246**	**251**	**254**	**257**	**265**	**273**	**280**	**289**	**308**	**327**
"L" (in)	(9.26)	(9.38)	(9.51)	(9.70)	(9.88)	(10.0)	(10.13)	(10.43)	(10.76)	(11.01)	(11.39)	(12.14)	(12.89)

English equivalents for metric specifications are shown in ( ).

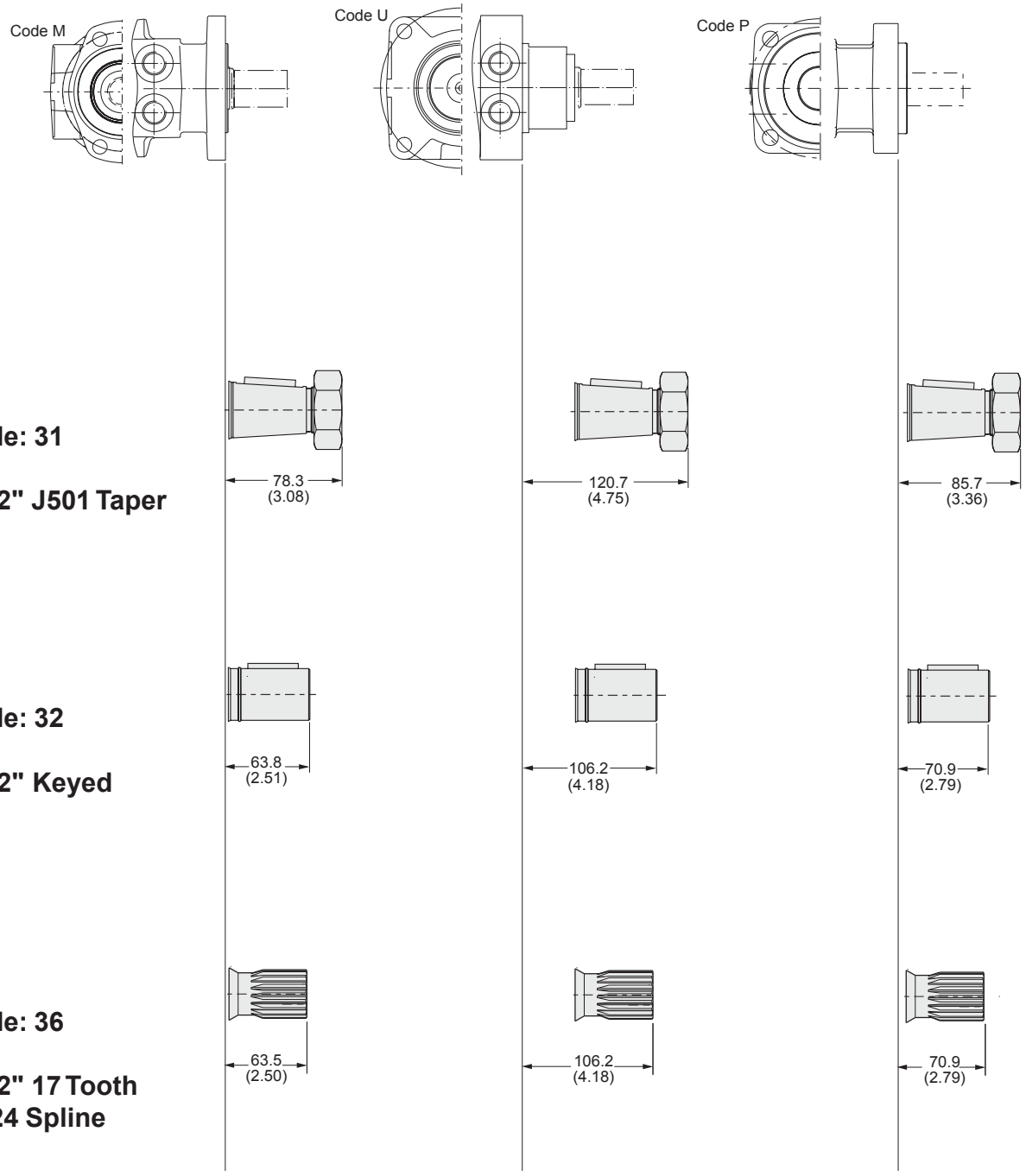

Code: 31

1 1/2" J501 Taper

Code: 32

1 1/2" Keyed

Code: 36

1 1/2" 17 Tooth
12/24 Spline

English equivalents for metric specifications are shown in ( ).

Code: 31

1 1/2" J501 Taper

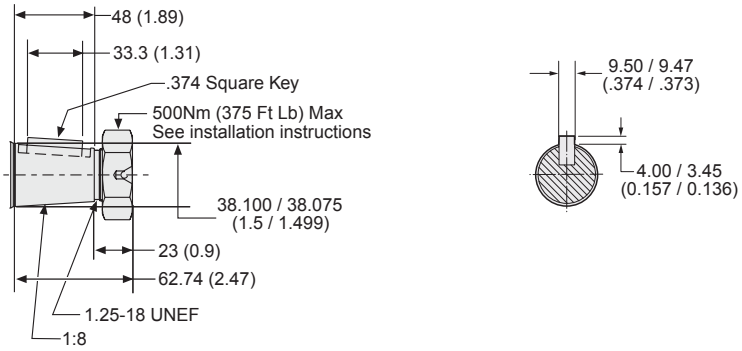

Code: 32

1 1/2" Keyed

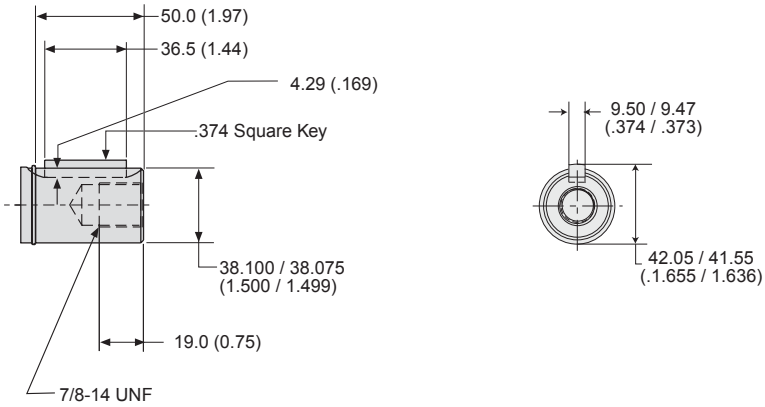

Code: 36

1 1/2" 17 Tooth 12/24 Spline

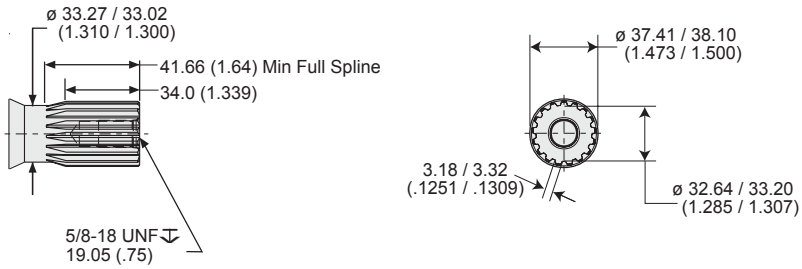

English equivalents for metric specifications are shown in ( ).

Notes

English equivalents for metric specifications are shown in ( ).

13 Displacements **13 Schluckvolumen** **13 Cylindrée** **13 Despazamientos**		(8.6 to 58.5 in3/rev) **141 . . . 959 cm³/rev**
	Cont.	**Int.**
Maximum Pressure **Eingangsdruck** **Pression entrée** **Presion Maxima**	(3000 psid) **. . . 207 bar**	(4000 psid) **. . . 276 bar**
Maximum Oil Flow **Schluckstrom** **Débit d'huile** **Caudal Maximo de Aceite**		(30 gpm) **. . . 114 lpm**
Maximum Speed **Drehzahl** **Vitesse de rotation** **Velocidad Maxima**		(660 rpm) **660 rpm**
	Cont.	**Int.**
Maximum Torque **MaxDrehmoment** **Couple** **Torque Maximo**	(9,239 lb in) **1044 Nm**	(12,636 lb in) **1428 Nm**
Maximumg Side Load at Key **Seitenlast** **Charges latèrales** **Carga Maxima Lateral**		(4790 lb) **. . . 21306 N**

⚠ CAUTION!
See installation/operating instructions for product cautions and proper use.

Exceptional Strength and Durability in a High Performance Motor/Brake Package

This brake motor consists of a BH Series motor integrated into a wet disc, spring applied, hydraulically released brake. Standard holding capacity is 16,000 lb in of holding torque. The brake is front mounted for reliable operation even in the event of a system failure. The brake release port is capable of pressures to 3000 PSI.

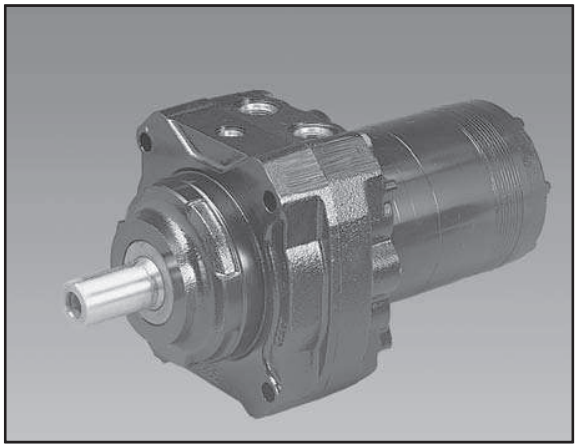

Rated Brake Holding Capacity @ Zero Release Pressure Nm (in-lbs)	Maximum Full Release Pressure bar (PSI)
1800 (16,000)	22 (315)
16,000 in-lbs is standard holding capacity. For other holding capacities, consult the factory for price and availability.	

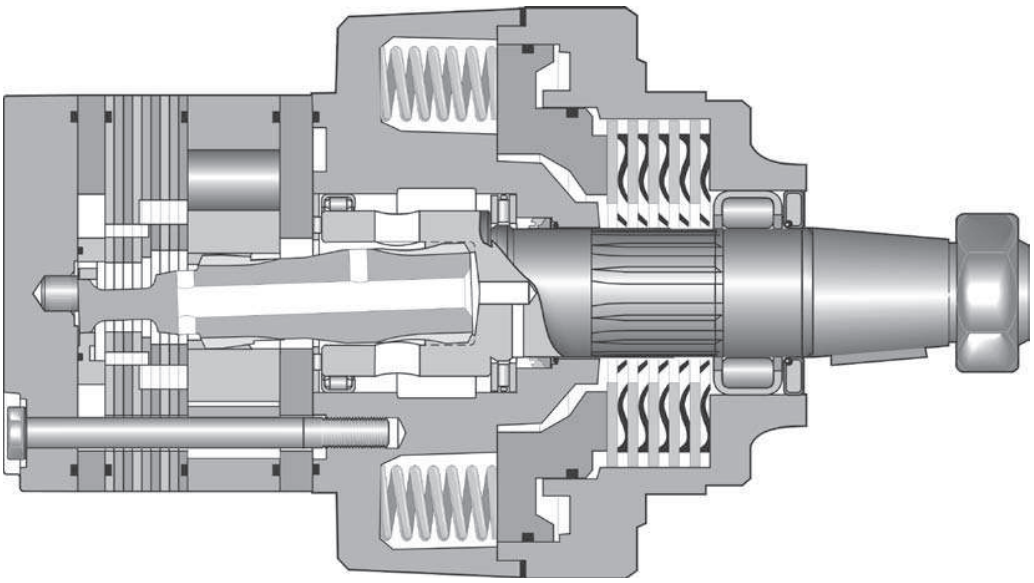

016 BH Brake.indd, js

Parker Hannifin Corporation
Hydraulic Pump/Motor Division
Greeneville, Tennessee, USA

BH	XXXX	X	XX	0	XXXX
Series	Displacement Schluckvolumen Cylindrée Desplazamiento	Mounting/Ports Gehäuse/Anschluß Carter/Plan de raccordement Montaje/Lumbreras	Shaft Welle Arbre Eje	Rotation Drehrichtung Direction de rotation Rotacion	Options Opciones

Code	cm^3/U cm^3/tr $cm^3/giro$ in^3/rev
0140	141 / 8.6
0170	169 / 10.3
0195	195 / 11.9
0240	238 / 14.5
0280	280 / 17.1
0310	310 / 18.9
0335	337 / 20.6
0405	405 / 24.7
0475	477 / 29.1
0530	528 / 32.3
0625	623 / 38.0
0785	786 / 48.0
0960	959 / 58.5

Code	Shaft
31*	1 1/2" J501 Taper[1] 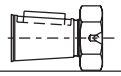
32	1 1/2" Keyed 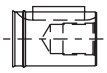

* Castle nut available on Tapered Shafts Only.
Ecrou a creneaux degages disponible pour l'arbre conique seulement
Solo eje conico viene con tuerca entallada
[1] See installation instructions.

Code	Mounting/Ports
AS	Front Mtg/Front Bolting 1/2-13 UNC Thd, 7/8-14 SAE 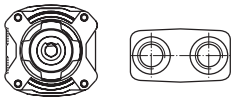
CS	Rear Mtg/Thru Bolting, 7/8-14 SAE 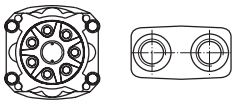

Code	Front Port Rotation
0	Standard 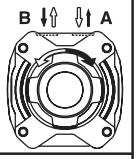
1	Reverse Timed Manifold 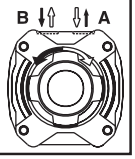

Code	Description
AAAB	No Paint No lackiert
AAAA	Black Paint Schwarz lackiert

For performance data curves, see TH section.

For other available options, see pages 257–258.

Wheel Mount/Radnabengenhause
Monture à roue/ Montaje de rueda

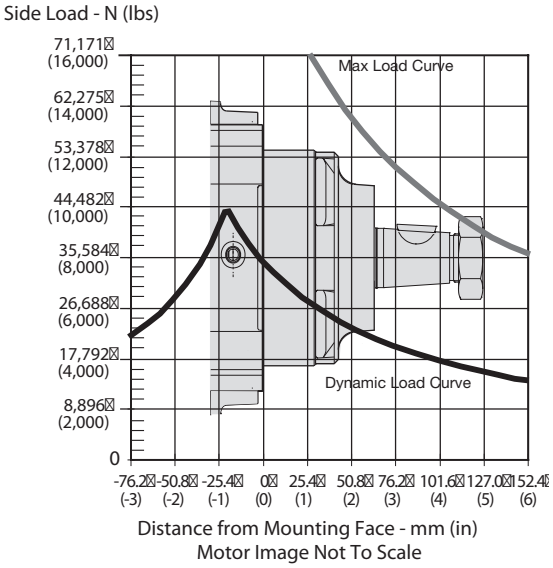

The maximum load curve is defined by bearing static load capacity. This curve should not be exceeded at any time including shock loads.
Die maximale radiale Wellenbelastungskurve ist definiert als maximale statische Last ohne Drehzahl. Sie gilt als Grenze und sollte keinesfalls überschritten werden.
La courbe de charge maximale est définie par la capacité de charge statique portante. Cette courbe ne devrait être dépassée en aucun moment y compris pour les charges par à-coups.
La curva de carga máxima queda definida por la capacidad de carga estática del cojinete. No se deben superar los valores de esta curva, ni siquiera con cargas provisorias de impacto.

The dynamic side load curve is based on uni-directional steady state loads for L_{10} bearing life at 6 x 10^6 revolutions.
Die zulässige auslegbare radiale Wellenbelastungskurve ist unter ruhenden, einseitig statisch gerichteten Lastverhältnissen auf eine L_{10} Lebensdauer mit 6 x 10^6 Umdrehungen kalkuliert.
La courbe de charge latérale permise se base sur des charges unidirectionnelles en régime permanent pour le roulement L_{10} à 6 x 10^6 révolutions.
La curva de valores admisibles de carga lateral está basada en cargas constantes para cojinetes L_{10} a 6 x 10^6 revoluciones.

Equation to Calculate the Expected Radial Bearing Life
Gleichung zur Ermittlung der Lagerlebensdauer

Equation to calculate the dynamic bearing life for a given load:
Bestimmung der erlaubten radialen Wellenbelastung mit vorgegebener Last

Use F_a, F_b and S in equation to determine hours of L_{10} bearing life.
Die Lebensdauer in Stunden ergibt sich durch einsetzen von F_a, F_b, und S in die nachstehende Formel.

$$L = \frac{6 \times 10^6}{60 \times S} \left\{ \frac{F_a}{F_b} \right\}^{3.33}$$

Where / Mit:

S = Shaft Speed RPM / Abtriebswellendrehzahl in min^{-1}
L = Life In Hours / Lebensdauer in Stunden
F_a = Dynamic side load defined by above curve at a distance from mounting flange. / Erlaubte radiale Wellenbelastung als Function der Laenge
F_b = Application side load. / Anwendungsseitige Wellenbelastung

Note: Calculations are based on L_{10} bearing life per ISO 281.
Auslegung basiert auf einer L_{10} Lenbendauer nach ISO 281

Code: AS

Front Mounting / Front Bolting, 7/8-14 SAE O-Ring

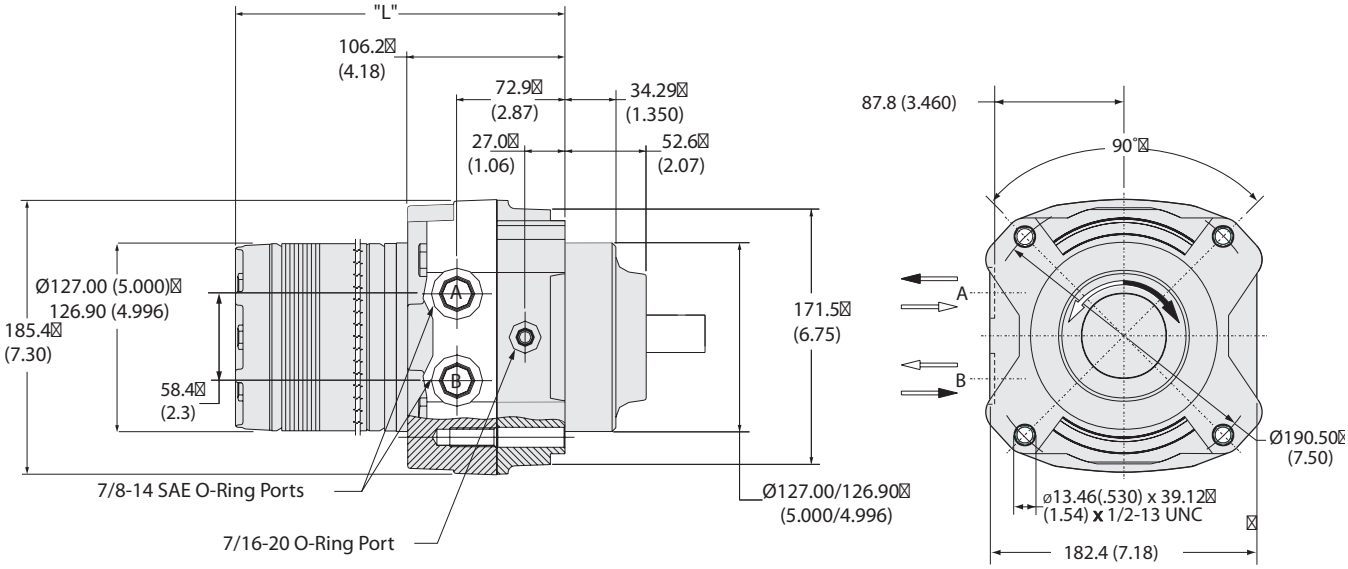

Code AS		0140	0170	0195	0240	0280	0310	0335	0405	0475	0530	0625	0785	0960
Weight/Gewicht	**kg**	**27.3**	**27.5**	**27.8**	**28.1**	**28.5**	**28.7**	**28.9**	**29.5**	**30.2**	**30.9**	**31.7**	**33.2**	**34.9**
Poids/Peso	(lb)	(60.2)	(60.8)	(61.3)	(62.1)	(63.0)	(63.5)	(63.9)	(65.2)	(66.7)	(68.3)	(69.9)	(73.3)	(77.1)
Length	**"L" mm**	**198.6**	**201.7**	**205.0**	**209.6**	**214.4**	**217.9**	**220.7**	**228.1**	**236.7**	**243.1**	**252.5**	**271.5**	**290.6**
	"L" (in)	(7.82)	(7.94)	(8.07)	(8.25)	(8.44)	(8.58)	(8.69)	(8.98)	(9.32)	(9.57)	(9.94)	(10.69)	(11.44)

Code: CS

Rear Mounting/Thru Bolting, 7/8-14 SAE O-Ring

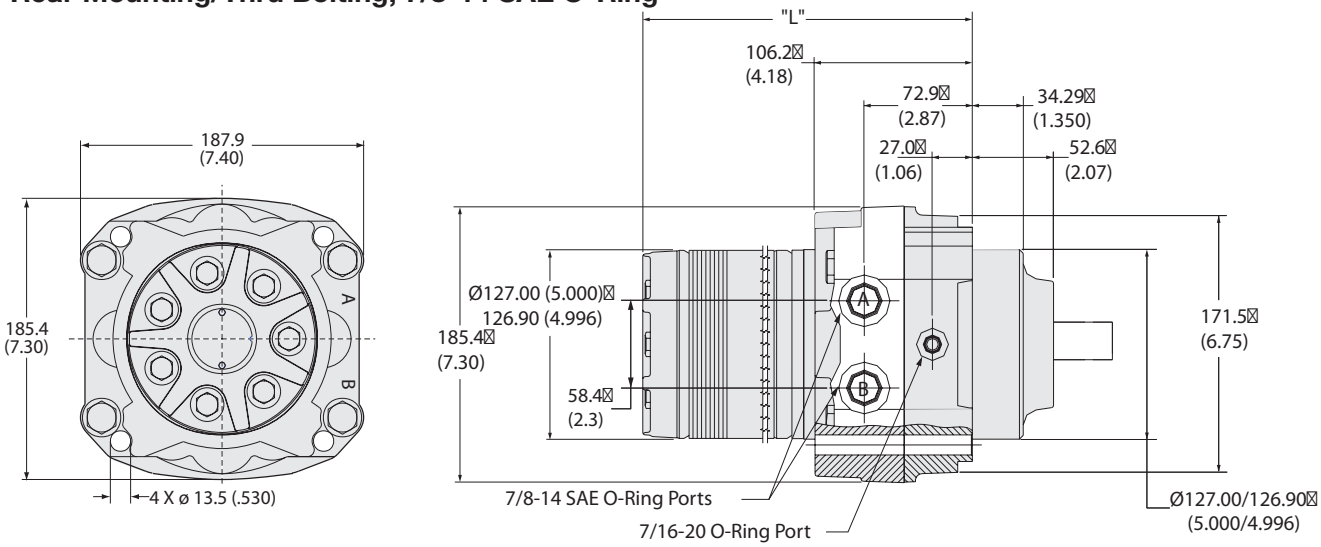

Code CS		0140	0170	0195	0240	0280	0310	0335	0405	0475	0530	0625	0785	0960
Weight/Gewicht	**kg**	**27.3**	**27.5**	**27.8**	**28.1**	**28.5**	**28.7**	**28.9**	**29.5**	**30.2**	**30.9**	**31.7**	**33.2**	**34.9**
Poids/Peso	(lb)	(60.2)	(60.8)	(61.3)	(62.1)	(63.0)	(63.5)	(63.9)	(65.2)	(66.7)	(68.3)	(69.9)	(73.3)	(77.1)
Length	**"L" mm**	**198.6**	**201.7**	**205.0**	**209.6**	**214.4**	**217.9**	**220.7**	**228.1**	**236.7**	**243.1**	**252.5**	**271.5**	**290.6**
	"L" (in)	(7.82)	(7.94)	(8.07)	(8.25)	(8.44)	(8.58)	(8.69)	(8.98)	(9.32)	(9.57)	(9.94)	(10.69)	(11.44)

English equivalents for metric specifications are shown in ( ).

016 BH Brake.indd, js

Parker Hannifin Corporation
Hydraulic Pump/Motor Division
Greeneville, Tennessee, USA

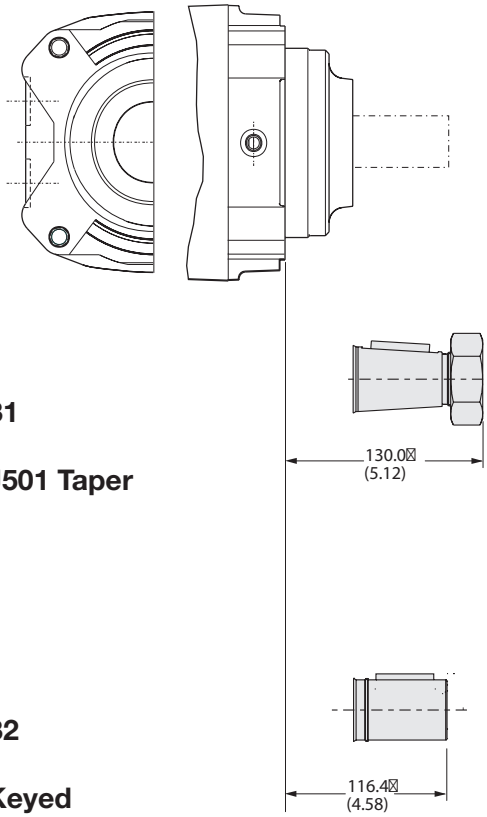

Code: 31

1 1/2" J501 Taper

Code: 32

1 1/2" Keyed

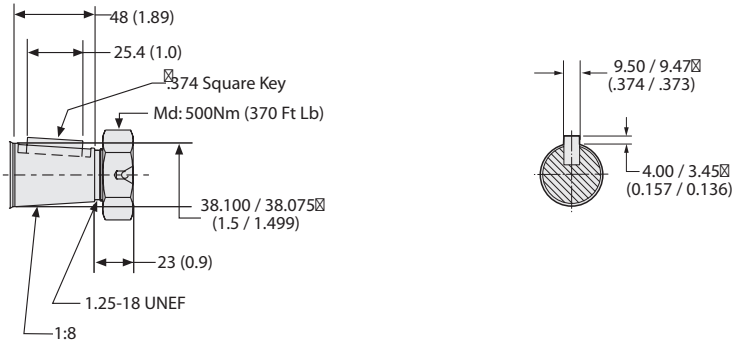

Code: 31

1 1/2" J501 Taper

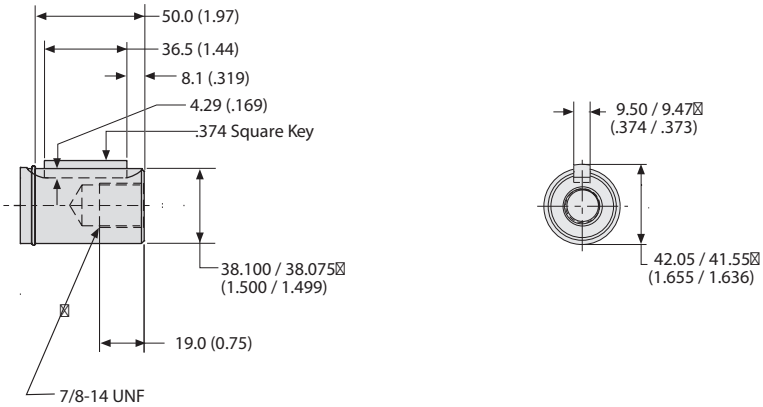

Code: 32

1 1/2" Keyed

English equivalents for metric specifications are shown in ( ).

016 BH Brake.indd, js

7 Displacements **7 Schluckvolumen** **Cylindrée** **7 Despazamientos**		(15.3 to 61.0 in³/rev) **250 . . . 1000 cm³/rev**
	Cont.	**Int.**
Maximum Pressure **Eingangsdruck** **Pression entrée** **Pressione in entrata**	(3500 psid) **. . . 241 bar**	(4500 psid) **. . . 310 bar**
Maximum Oil Flow **Schluckstrom** **Débit d'huile** **Portata**		(60 gpm) **. . . 227 lpm**
Maximum Speed **Drehzahl** **Velocità di rotazione** **Vitesse de rotation**		(523 rpm) **523 rpm**
	Cont.	**Int.**
Maximum Torque **MaxDrehmoment** **Couple** **Coppia**	(21360 lb in) **2413 Nm**	(23540 lb in) **2660 Nm**
Maximum Side Load at Key **Seitenlast** **Charges latèrales** **Carico radiale**		(5900 lb) **. . . 26245 N**

Exceptional Strength and Durability in a High Performance Motor

The heart of Parker's TK Series powertrain, the torque link, is an extra heavy duty part that includes patented 60:40 spline geometry. Rugged construction throughout allows the transmission of over 23,000 lb-in of torque. The entire powertrain is continually washed in cool, high flow fluid to assure long life. Roller vanes and sealed commutator maintain high efficiency and provide smooth low speed performance.

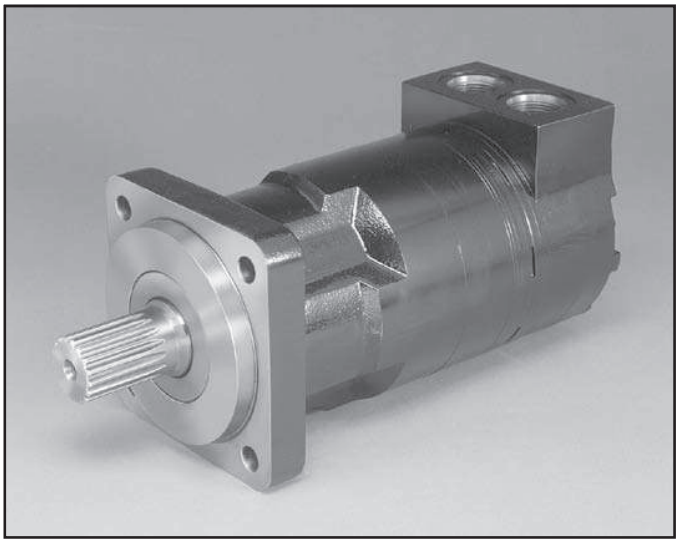

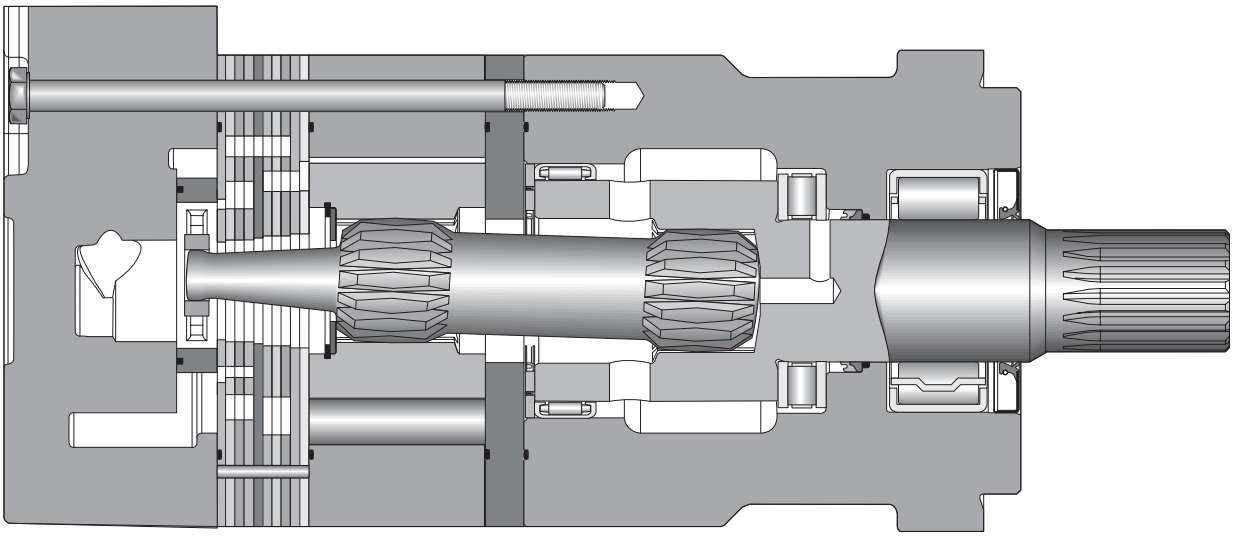

TK	XXXX	X5	XX	0	XXXX
Series	Displacement Schluckvolumen Cylindrée Desplazamiento	Mounting/Rear Ports Gehäuse/Endanschluß Carter/Alimentazione Laterale Montaje/Orifices arriér	Shaft Welle Arbre Ejes	Rotation Drehrichtung Direction de rotation Rotacion	Options Opciones

Code	cm^3/tr cm^3/giro cm^3/U in^3/rev
0250	250 / 15.3
0315	315 / 19.2
0400	400 / 24.4
0500	500 / 30.5
0630	630 / 38.4
0800	800 / 48.8
1000	1000 / 61.0

Code	Shaft
32	1 1/2" Keyed
36	1 1/2" 17 Tooth 12/24 Spline
63	1 3/4" Tapered
64	40mm Keyed

Code	Rear Port Rotation
0	Standard
1	Reverse Timed Manifold

Code	Mounting
K5	Standard SAE CC, 1 5/16-12 SAE Rear Radial
T5	Wheel Mount, 1 5/16-12 SAE Rear Radial

Code	Options
AAAB	No Paint No lackiert
AAAA	Black Paint Schwarz lackiert

For other available options, see pages 257–258.

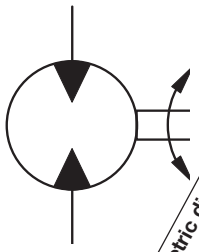

Motor Series TK	Geometric displacement / Geom. Schluckvolumen / Cylindrée / Despazamientos	Max. speed @ Max. intermittent flow / Max. Drehzahl Intermittierender Betrieb: / Velocità di rotazione max Fonctionnement intermittent: / Velocidad maxima a caudal intermitente maximo	Max. oil flow / Max. Schluckstrom / Débit d'huile maxi / Caudal Maximo de Aceite		Max. differential pressure / Max. Druckgefälle / Chute de pression maxi / Presion diferencial maxima		Max. supply pressure / Max. Eingangsdruck / Pression maxi entrée / Presion maxima de alimentacion	Max. torque / Max. Drehmoment / Couple maxi / Torque Maximo		Max. performance / Max. Leistungabgabe / Puissance de sortie maxi / Maximo redinmiento	Min. starting torque / Min. Anlaufmoment / Couple min. fourni au dé manrage / Torque minimo de arranque	
	cm³/rev in³/rev	rev/min	***cont / int**** **l/min** g/min		***cont / int**** **bar** psid		***max*** **bar** psig	***cont / int**** **Nm** lb-in		***max*** **KW** HP	***cont / int**** **Nm** lb-in	
TK 0250	**250** 15.3	523	**114** 30	**133** 35	**241** 3500	**310** 4500	**328** 4750	**814** 7204	**1043** 9234	**48.5** 65.0	**689** 6100	**879** 7780
TK 0315	**315** 19.2	413	**114** 30	**133** 35	**241** 3500	**310** 4500	**328** 4750	**1029** 9105	**1314** 11625	**47.4** 63.5	**949** 8400	**1217** 10770
TK 0400	**400** 24.4	373	**114** 30	**151** 40	**207** 3000	**276** 4000	**328** 4750	**1153** 10201	**1524** 13484	**48.7** 65.3	**1049** 9280	**1410** 12480
TK 0500	**500** 30.5	298	**114** 30	**151** 40	**207** 3000	**276** 4000	**328** 4750	**1439** 12736	**1914** 16940	**48.1** 64.5	**1322** 11700	**1783** 15780
TK 0630	**630** 38.4	237	**114** 30	**151** 40	**207** 3000	**224** 3250	**328** 4750	**1617** 14313	**1716** 15187	**33.7** 45.2	**1497** 13250	**1621** 14350
TK 0800	**800** 48.8	276	**151** 40	**227** 60	**190** 2750	**207** 3000	**328** 4750	**1916** 16960	**2300** 20360	**44.4** 59.5	**1745** 15440	**1902** 16834
TK 1000	**1000** 61.0	218	**151** 40	**227** 60	**172** 2500	**190** 2750	**328** 4750	**2413** 21360	**2660** 23540	**35.4** 47.5	**1981** 17535	**2180** 19290

Performance data based on testing using 10W40 oil with a viscosity of 200 SUS at 54° C (130° F.) Performance data is typical. Actual data may vary slightly from one production motor to another.

Les donnees sur les performances sont basees sur des tests utilisant de l'huile 10W40 d'une viscosite de 200 SUS a 54°C (130°F). Ces donnees correspondent a des situations typiques. Les donnees reelles peuvent varier legerement d'un moteur de production a l'autre.

Leistugsdaten sind gemessen mit SAE 10W40 bei einer Viskositaet von 43,1 Cst beo 54°C. Geringfuegige Abweichungen von den Katalogerten sond moeglich.

Datos tecnicos obtenidos con aceite 10W40 de 200 SUS de viscosidad a 54°C (130°F). Los datos proporcionados son valores tipcos. Los valores exactos reales podrian tener una pequena variacion entre distintos motores.

* Intermittent operation rating applies to 10% of every minute.
Intermittierende Werte maximal 10% von jeder Betriebsminute.
Fonctionnement interm. 10% max. de chaque minute d`utilisation.
Capacidad de funcionamiento intermitente valida para 10% por cada minuto.

TK 0250

15.3 cu in / rev

PRESSURE (PSID)

Flow (GPM)	500	1000	1500	2000	2500	3000	3500	4000	4500
.5	892 **5**	1838 **3**							
1	895 **12**	1834 **10**	2777 **7**	3729 **5**	4687 **4**	5366 **3**			
2	941 **27**	1922 **25**	2911 **21**	3900 **19**	4895 **18**	5614 **17**	6576 **16**	7551 **15**	8526 **14**
4	951 **57**	1959 **55**	2972 **51**	3988 **48**	5012 **46**	5932 **43**	6874 **40**	7824 **38**	8792 **37**
8	927 **118**	1960 **114**	2997 **110**	4035 **107**	5069 **103**	6121 **98**	7124 **95**	8114 **92**	9139 **89**
12	870 **178**	1913 **174**	2958 **170**	4008 **166**	5060 **161**	6167 **155**	7204 **149**	8221 **144**	9230 **139**
16	786 **239**	1841 **234**	2895 **229**	3943 **224**	4994 **219**	6147 **214**	7183 **209**	8203 **205**	9234 **199**
20	671 **299**	1731 **294**	2799 **289**	3855 **283**	4896 **278**	6088 **272**	7126 **267**	8159 **261**	9185 **255**
24	555 **359**	1600 **354**	2666 **349**	3739 **342**	4796 **336**	6001 **330**	7044 **324**	8075 **319**	9120 **314**
28	410 **419**	1457 **416**	2516 **409**	3585 **402**	4657 **395**	5887 **388**	6939 **380**	7967 **373**	8993 **366**
32	237 **479**	1294 **476**	2362 **469**	3424 **462**	4490 **455**	5747 **448**	6802 **441**	7806 **434**	8809 **426**
35	119 **523**	1157 **522**	2216 **514**	3296 **507**	4381 **499**	5647 **492**	6676 **484**	7661 **477**	8685 **470**

TORQUE (LB IN) 5647
SPEED (RPM) 492

250 cc / rev

EU

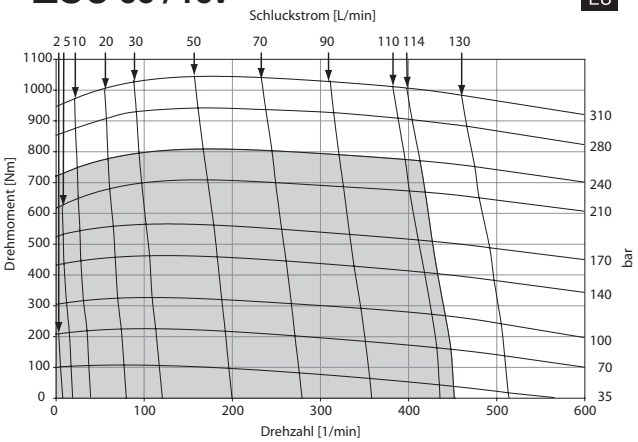

Cont. Int.

Intermittent operation rating applies to 10% of every minute.

Fonctionnement interm. 10% max. de chaque minute d`utilisation.

Intermittierende Werte maximal 10% von jeder Betriebsminute.

Capacidad de funcionamiento intermitente valida para 10% por cada minuto.

Performance data based on testing using 10W40 oil with a viscosity of 200 SUS at 54° C (130° F.) Performance data is typical. Actual data may vary slightly from one production motor to another.

Les donnees sur les performances sont basees sur des tests utilisant de l'huile 10W40 d'une viscosite de 200 SUS a 54°C (130°F). Ces donnees correspondent a des situations typiques. Les donnees reelles peuvent varier legerement d'un moteur de production a l'autre.

Leistugsdaten sind gemessen mit SAE 10W40 bei einer Viskositaet von 43,1 Cst beo 54°C. Geringfuegige Abweichungen von den Katalogerten sond moeglich.

Datos tecnicos obtenidos con aceite 10W40 de 200 SUS de viscosidad a 54°C (130°F). Los datos proporcionados son valores tipcos. Los valores exactos reales podrian tener una pequena variacion entre distintos motores.

017 TK.indd, js

Parker Hannifin Corporation
Hydraulic Pump/Motor Division
Greeneville, Tennessee, USA

TK 0315

19.2 cu in / rev

PRESSURE (PSID)

	500	1000	1500	2000	2500	3000	3500	4000	4500
.5	1105 **5**	2300 **4**	3519 **3**						
1	1161 **11**	2342 **9**	3567 **9**	4786 **8**	6035 **8**	7319 **7**			
2	1210 **22**	2468 **21**	3728 **20**	4992 **19**	6222 **18**	7454 **17**	8675 **16**	9899 **15**	11104 **14**
4	1224 **46**	2512 **43**	3803 **41**	5094 **39**	6363 **37**	7623 **35**	8875 **33**	10108 **31**	11337 **30**
8	1201 **94**	2524 **91**	3853 **89**	5183 **86**	6498 **83**	7799 **80**	9084 **78**	10343 **77**	11587 **76**
12	1128 **142**	2458 **137**	3791 **133**	5134 **130**	6469 **127**	7793 **124**	9105 **121**	10383 **118**	11625 **117**
16	1021 **189**	2358 **184**	3702 **179**	5045 **176**	6390 **172**	7724 **168**	9043 **164**	10340 **161**	11601 **159**
20	890 **237**	2227 **232**	3580 **226**	4931 **222**	6278 **218**	7620 **214**	8942 **210**	10245 **205**	11520 **201**
24	739 **284**	2067 **280**	3419 **273**	4771 **268**	6123 **263**	7470 **259**	8798 **254**	10099 **249**	11374 **244**
28	586 **331**	1904 **327**	3249 **320**	4605 **314**	5953 **309**	7296 **304**	8636 **300**	9937 **293**	11222 **289**
32	397 **377**	1721 **374**	3087 **367**	4420 **361**	5757 **355**	7100 **350**	8447 **346**	9766 **339**	11057 **332**
35	240 **413**	1558 **410**	2897 **403**	4257 **395**	5606 **389**	6943 **383**	8284 **378**	9593 **371**	10888 **367**

Flow (GPM)

TORQUE (LB IN) 6943
SPEED (RPM) 383

315 cc / rev

EU

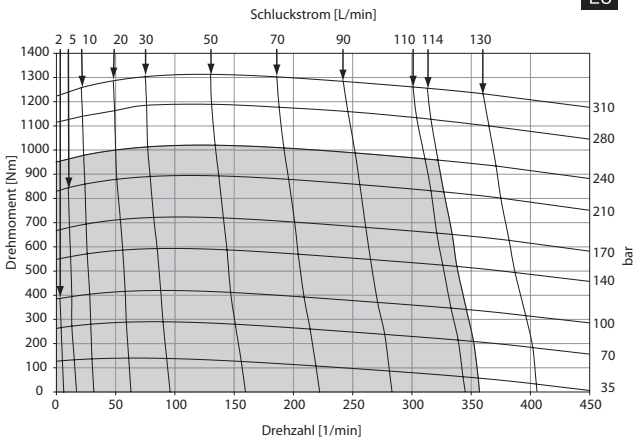

Cont. Int.

Intermittent operation rating applies to 10% of every minute.

Fonctionnement interm. 10% max. de chaque minute d`utilisation.

Performance data based on testing using 10W40 oil with a viscosity of 200 SUS at 54° C (130° F.) Performance data is typical. Actual data may vary slightly from one production motor to another.

Les donnees sur les performances sont basees sur des tests utilisant de l'huile 10W40 d'une viscosite de 200 SUS a 54°C (130°F). Ces donnees correspondent a des situations typiques. Les donnees reelles peuvent varier legerement d'un moteur de production a l'autre.

Intermittierende Werte maximal 10% von jeder Betriebsminute.

Caacidad de funcionamiento intermitente valida para 10% por cada minuto.

Leistugsdaten sind gemessen mit SAE 10W40 bei einer Viskositaet von 43,1 Cst beo 54°C. Geringfuegige Abweichungen von den Katalogerten sond moeglich.

Datos tecnicos obtenidos con aceite 10W40 de 200 SUS de viscosidad a 54°C (130°F). Los datos proporcionados son valores tipcos. Los valores exactos reales podrian tener una pequena variacion entre distintos motores.

TK 0400

24.4 cu in / rev

PRESSURE (PSID)

Flow (GPM)	500	1000	1500	2000	2500	3000	3500	4000
.5	1429 **4**	2974 **3**	4559 **3**	6201 **2**	7860 **2**	9483 **2**	11110 **2**	12511 **1**
1	1498 **8**	3029 **8**	4566 **7**	6173 **6**	7829 **6**	9479 **5**	11101 **5**	12648 **4**
2	1586 **17**	3211 **15**	4835 **14**	6466 **13**	8043 **12**	9590 **11**	11206 **10**	12865 **9**
4	1620 **36**	3295 **34**	4974 **32**	6652 **29**	8321 **28**	9962 **26**	11582 **25**	13052 **23**
8	1615 **73**	3334 **70**	5062 **68**	6790 **65**	8488 **63**	10160 **60**	11825 **58**	13301 **56**
12	1536 **110**	3282 **107**	5025 **105**	6764 **101**	8493 **98**	10201 **95**	11893 **92**	13462 **89**
16	1418 **148**	3171 **144**	4924 **141**	6676 **138**	8421 **134**	10150 **130**	11846 **127**	13484 **123**
20	1270 **185**	3022 **181**	4776 **178**	6537 **174**	8296 **170**	10037 **166**	11744 **161**	13432 **157**
24	1095 **222**	2846 **219**	4601 **215**	6371 **210**	8135 **206**	9876 **201**	11610 **197**	13405 **192**
28	907 **259**	2645 **256**	4397 **251**	6171 **247**	7937 **242**	9681 **237**	11430 **232**	13250 **228**
32	683 **297**	2420 **293**	4179 **288**	5951 **283**	7714 **278**	9467 **273**	11211 **268**	12923 **262**
35	501 **325**	2216 **322**	4007 **316**	5779 **311**	7529 **306**	9280 **300**	11020 **294**	12745 **289**
40	195 **373**	1908 **368**	3649 **362**	5417 **357**	7193 **351**	8961 **345**	10703 **339**	12390 **332**

TORQUE (LB IN) 8961
SPEED (RPM) 345

400 cc / rev

EU

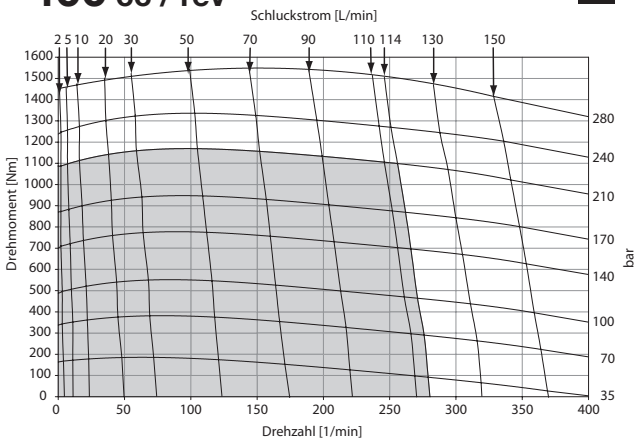

☐ Cont. ☐ Int.

Intermittent operation rating applies to 10% of every minute.

Fonctionnement interm. 10% max. de chaque minute d`utilisation.

Intermittierende Werte maximal 10% von jeder Betriebsminute.

Capacidad de funcionamiento intermitente valida para 10% por cada minuto.

Performance data based on testing using 10W40 oil with a viscosity of 200 SUS at 54° C (130° F.) Performance data is typical. Actual data may vary slightly from one production motor to another.

Les donnees sur les performances sont basees sur des tests utilisant de l'huile 10W40 d'une viscosite de 200 SUS a 54°C (130°F). Ces donnees correspondent a des situations typiques. Les donnees reelles peuvent varier legerement d'un moteur de production a l'autre.

Leistugsdaten sind gemessen mit SAE 10W40 bei einer Viskositaet von 43,1 Cst beo 54°C. Geringfuegige Abweichungen von den Katalogerten sond moeglich.

Datos tecnicos obtenidos con aceite 10W40 de 200 SUS de viscosidad a 54°C (130°F). Los datos proporcionados son valores tipcos. Los valores exactos reales podrian tener una pequena variacion entre distintos motores.

TK 0500

30.5 cu in / rev

PRESSURE (PSID)

Flow (GPM)	500	1000	1500	2000	2500	3000	3500	4000
1	1880 **5**	3810 **4**	5826 **3**	7926 **2**	9000 **2**	11979 **2**	14077 **1**	16261 **1**
2	1982 **13**	4013 **11**	6067 **9**	8109 **8**	10154 **6**	12243 **5**	14323 **5**	16394 **5**
4	2000 **28**	4103 **26**	6223 **24**	8346 **22**	10464 **20**	12559 **18**	14642 **16**	16615 **14**
8	1971 **58**	4118 **56**	6276 **53**	8437 **50**	10584 **48**	12724 **45**	14852 **44**	16825 **40**
12	1876 **91**	4041 **87**	6219 **85**	8400 **80**	10575 **77**	12736 **73**	14873 **70**	16901 **66**
16	1724 **120**	3904 **115**	6088 **112**	8277 **109**	10461 **103**	12633 **101**	14801 **97**	16940 **93**
20	1537 **148**	3725 **145**	5911 **142**	8105 **138**	10301 **134**	12494 **130**	14660 **125**	16783 **121**
24	1318 **178**	3504 **175**	5694 **171**	7898 **167**	10108 **163**	12310 **159**	14481 **154**	16607 **149**
28	1066 **208**	3242 **205**	5430 **200**	7634 **196**	9856 **192**	12063 **188**	14232 **182**	16405 **177**
32	781 **238**	2959 **235**	5146 **230**	7357 **225**	9580 **221**	11781 **217**	13939 **211**	16110 **206**
35	551 **260**	2702 **258**	4940 **252**	7153 **248**	9335 **243**	11517 **239**	13703 **233**	15892 **228**
40	178 **298**	2341 **296**	4519 **290**	6746 **285**	8957 **280**	11041 **275**	13296 **269**	15400 **264**

TORQUE (LB IN) 11041
SPEED (RPM) 275

500 cc / rev

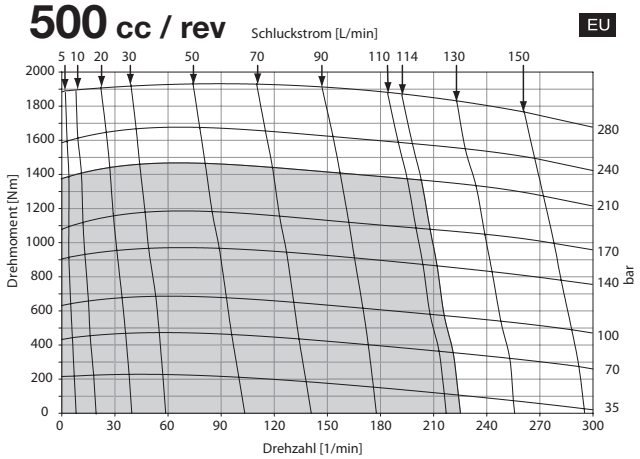

Cont. Int.

Intermittent operation rating applies to 10% of every minute.

Fonctionnement interm. 10% max. de chaque minute d`utilisation.

Performance data based on testing using 10W40 oil with a viscosity of 200 SUS at 54° C (130° F.) Performance data is typical. Actual data may vary slightly from one production motor to another.

Les donnees sur les performances sont basees sur des tests utilisant de l'huile 10W40 d'une viscosite de 200 SUS a 54°C (130°F). Ces donnees correspondent a des situations typiques. Les donnees reelles peuvent varier legerement d'un moteur de production a l'autre.

Intermittierende Werte maximal 10% von jeder Betriebsminute.

Caacidad de funcionamiento intermitente valida para 10% por cada minuto.

Leistugsdaten sind gemessen mit SAE 10W40 bei einer Viskositaet von 43,1 Cst beo 54°C. Geringfuegige Abweichungen von den Katalogerten sond moeglich.

Datos tecnicos obtenidos con aceite 10W40 de 200 SUS de viscosidad a 54°C (130°F). Los datos proporcionados son valores tipcos. Los valores exactos reales podrian tener una pequena variacion entre distintos motores.

TK 0630

38.4 cu in / rev

PRESSURE (PSID)

Flow (GPM)	500	1000	1500	2000	2500	3000	3250
1	2319 **4**	4638 **2**	6993 **2**	9395 **1**			
2	2431 **10**	4839 **8**	7230 **7**	9636 **6**	11969 **5**	13330 **4**	13946 **3**
4	2492 **22**	4992 **19**	7446 **17**	9896 **15**	12235 **14**	13800 **13**	14516 **11**
8	2475 **45**	5116 **42**	7670 **39**	10180 **36**	12504 **33**	14216 **31**	15003 **29**
12	2323 **69**	5027 **66**	7694 **62**	10275 **57**	12614 **53**	14253 **50**	15147 **46**
16	2106 **94**	4850 **90**	7572 **85**	10229 **79**	12659 **74**	14290 **70**	15187 **65**
20	1885 **118**	4638 **114**	7390 **109**	10092 **102**	12609 **97**	14313 **91**	15095 **85**
25	1455 **147**	4261 **143**	7110 **136**	9946 **129**	12528 **119**	14268 **111**	15068 **104**
30	969 **177**	3737 **175**	6596 **168**	9451 **161**	12111 **152**	14113 **142**	15044 **133**
32	751 **189**	3508 **187**	6330 **181**	9201 **174**	11909 **165**	14028 **154**	15018 **144**
40	121 **237**	2592 **235**	5266 **233**	8201 **226**	11101 **217**	13504 **205**	14912 **191**

TORQUE (LB IN) 13504
SPEED (RPM) 205

630 cc / rev

EU

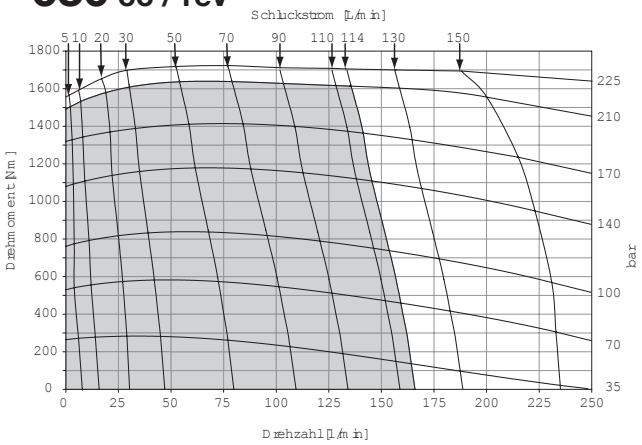

Cont. Int.

Intermittent operation rating applies to 10% of every minute.

Fonctionnement interm. 10% max. de chaque minute d`utilisation.

Performance data based on testing using 10W40 oil with a viscosity of 200 SUS at 54° C (130° F.) Performance data is typical. Actual data may vary slightly from one production motor to another.

Les donnees sur les performances sont basees sur des tests utilisant de l'huile 10W40 d'une viscosite de 200 SUS a 54°C (130°F). Ces donnees correspondent a des situations typiques. Les donnees reelles peuvent varier legerement d'un moteur de production a l'autre.

Intermittierende Werte maximal 10% von jeder Betriebsminute.

Capacidad de funcionamiento intermitente valida para 10% por cada minuto.

Leistugsdaten sind gemessen mit SAE 10W40 bei einer Viskositaet von 43,1 Cst beo 54°C. Geringfuegige Abweichungen von den Katalogerten sond moeglich.

Datos tecnicos obtenidos con aceite 10W40 de 200 SUS de viscosidad a 54°C (130°F). Los datos proporcionados son valores tipcos. Los valores exactos reales podrian tener una pequena variacion entre distintos motores.

TK 0800

48.8 cu in / rev

PRESSURE (PSID)

	500	1000	1500	2000	2500	3000
1	3144 **4**	6368 **4**	9714 **3**	13131 **3**	16586 **3**	20020 **3**
2	3254 **9**	6589 **8**	9957 **8**	13355 **7**	16783 **7**	20239 **7**
4	3313 **18**	6721 **17**	10131 **17**	13531 **16**	16926 **15**	20338 **15**
8	3267 **37**	6707 **36**	10146 **35**	13561 **33**	16961 **32**	20360 **31**
12	3105 **55**	6564 **54**	10011 **53**	13436 **51**	16832 **49**	20191 **47**
16	2817 **74**	6316 **73**	9812 **71**	13263 **68**	16678 **66**	20082 **64**
20	2530 **93**	6046 **91**	9530 **89**	12963 **86**	16392 **84**	19806 **81**
24	2153 **112**	5637 **109**	9156 **107**	12636 **104**	16060 **101**	19456 **99**
28	1741 **130**	5226 **128**	8766 **125**	12213 **122**	15621 **119**	19057 **116**
32	1302 **149**	4774 **147**	8267 **144**	11748 **140**	15196 **137**	18574 **134**
35	941 **162**	4411 **161**	7913 **158**	11363 **154**	14816 **151**	18206 **147**
40	349 **186**	3765 **184**	7231 **181**	10684 **177**	14141 **174**	17543 **170**
45	244 **209**	3134 **208**	6585 **205**	10019 **201**	13462 **197**	16835 **193**
50	0 **234**	2287 **232**	5748 **228**	9207 **224**	12688 **219**	16125 **216**
55		1441 **256**	4326 **252**	8356 **247**	12212 **242**	15213 **239**
60			2904 **276**	7505 **270**	10677 **265**	14301 **262**

Flow (GPM)

TORQUE (LB IN) 17543
SPEED (RPM) 170

800 cc / rev

EU

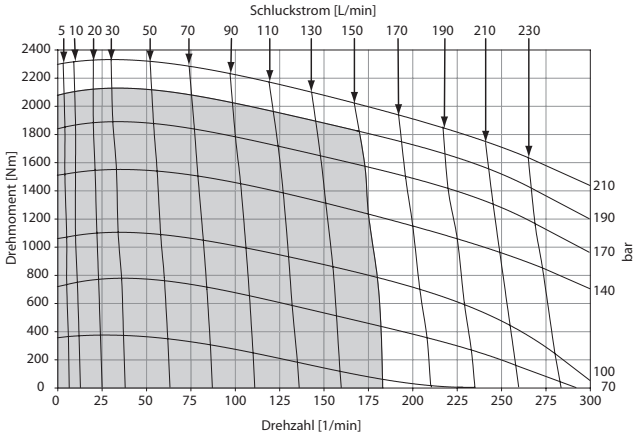

Cont. Int.

Intermittent operation rating applies to 10% of every minute.

Fonctionnement interm. 10% max. de chaque minute d`utilisation.

Performance data based on testing using 10W40 oil with a viscosity of 200 SUS at 54° C (130° F.) Performance data is typical. Actual data may vary slightly from one production motor to another.

Les donnees sur les performances sont basees sur des tests utilisant de l'huile 10W40 d'une viscosite de 200 SUS a 54°C (130°F). Ces donnees correspondent a des situations typiques. Les donnees reelles peuvent varier legerement d'un moteur de production a l'autre.

Intermittierende Werte maximal 10% von jeder Betriebsminute.

Caacidad de funcionamiento intermitente valida para 10% por cada minuto.

Leistugsdaten sind gemessen mit SAE 10W40 bei einer Viskositaet von 43,1 Cst beo 54°C. Geringfuegige Abweichungen von den Katalogerten sond moeglich.

Datos tecnicos obtenidos con aceite 10W40 de 200 SUS de viscosidad a 54°C (130°F). Los datos proporcionados son valores tipcos. Los valores exactos reales podrian tener una pequena variacion entre distintos motores.

TK 1000

61.0 cu in / rev

PRESSURE (PSID)

	500	1000	1500	2000	2500	2750
1	3839 **3**	7926 **2**	12129 **1**	16431 **1**	20758 **1**	23100 **1**
2	4049 **7**	8269 **6**	12522 **5**	16814 **4**	21124 **4**	23195 **4**
4	4122 **14**	8406 **13**	12692 **12**	16997 **11**	21317 **11**	23477 **11**
8	4040 **29**	8378 **28**	12711 **26**	17031 **25**	21366 **23**	23546 **23**
12	3846 **44**	8215 **42**	12581 **41**	16899 **39**	21173 **37**	23312 **36**
16	3519 **59**	7958 **57**	12362 **55**	16690 **53**	20955 **50**	23083 **50**
20	3168 **74**	7615 **72**	12006 **70**	16369 **67**	20683 **64**	22750 **63**
24	2705 **89**	7132 **87**	11594 **85**	15965 **82**	20245 **78**	22358 **77**
28	2173 **104**	6629 **102**	11088 **100**	15457 **96**	19776 **93**	21883 **92**
32	1627 **119**	6008 **117**	10463 **114**	14911 **111**	19230 **107**	21354 **105**
35	1170 **130**	5568 **129**	9988 **126**	14376 **123**	18768 **119**	20921 **117**
40	399 **149**	4732 **148**	9133 **145**	13544 **142**	17944 **138**	20093 **136**
45	0 **169**	3802 **167**	8071 **164**	12397 **161**	16791 **157**	18963 **155**
50	0 **187**	2733 **186**	6958 **183**	11168 **179**	15338 **175**	17376 **174**
55		1502 **205**	5845 **202**	9939 **198**	13985 **194**	15973 **191**
60			4732 **218**	8710 **215**	12632 **213**	14202 **211**

Flow (GPM)

TORQUE (LB IN) 20093
SPEED (RPM) 136

1000 cc / rev

EU

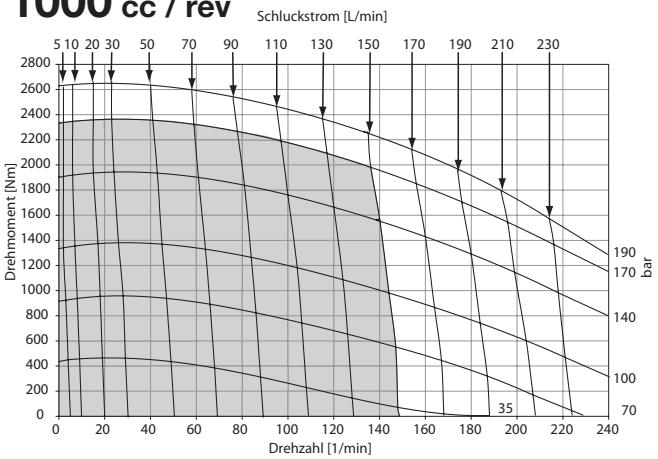

Cont. Int.

Intermittent operation rating applies to 10% of every minute.

Fonctionnement interm. 10% max. de chaque minute d`utilisation.

Intermittierende Werte maximal 10% von jeder Betriebsminute.

Capacidad de funcionamiento intermitente valida para 10% por cada minuto.

Performance data based on testing using 10W40 oil with a viscosity of 200 SUS at 54° C (130° F.) Performance data is typical. Actual data may vary slightly from one production motor to another.

Les donnees sur les performances sont basees sur des tests utilisant de l'huile 10W40 d'une viscosite de 200 SUS a 54°C (130°F). Ces donnees correspondent a des situations typiques. Les donnees reelles peuvent varier legerement d'un moteur de production a l'autre.

Leistugsdaten sind gemessen mit SAE 10W40 bei einer Viskositaet von 43,1 Cst beo 54°C. Geringfuegige Abweichungen von den Katalogerten sond moeglich.

Datos tecnicos obtenidos con aceite 10W40 de 200 SUS de viscosidad a 54°C (130°F). Los datos proporcionados son valores tipcos. Los valores exactos reales podrian tener una pequena variacion entre distintos motores.

Flange Mount / Standardgehäuse
Monture à bride(s) / Montaje de brida

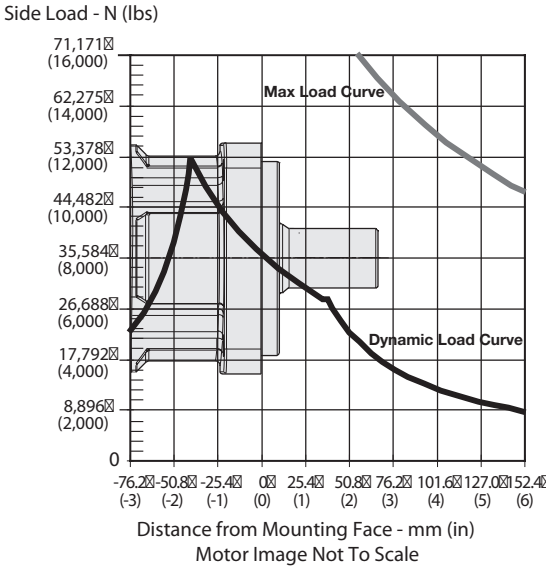

The dynamic side load curve is based on uni-directional steady state loads for L_{10} bearing life at 12 x 10^6 @ 100 RPM revolutions.
Die zulaessige auslegbare radiale Wellenbelastungskurve ist unter ruhenden, einseitig statisch gerichteten Lastverhaltnissen auf eine L_{10} Lebensdauer mit 12 x 10^6 Umdrehungen kalkuliert bei 100 min.
La courbe de charge laterale permise se base sur des charges unidirectionnelles en regime permanent pour le roulement L_{10} a 12 x 10^6 @ 100 RPM revolutions.
La curva de valores admisibles de carga lateral esta basada en cargas contantes para cojinetes L_{10} a 12 x 10^6 revoluciones @ 100 RPM.

Wheel Mount / Radnabengehäuse
Monture à roue / Montaje de rueda

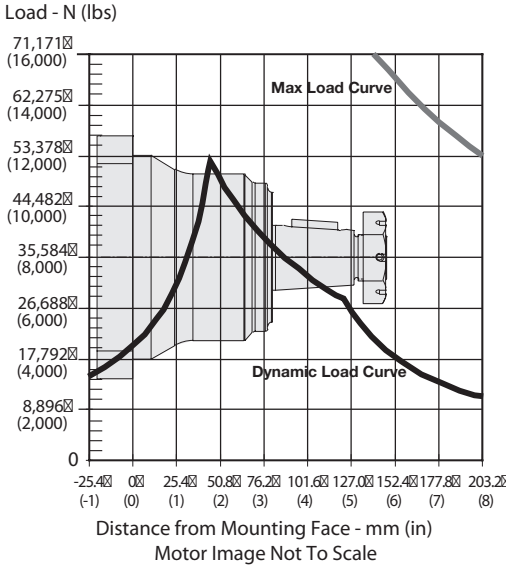

The maximum load curve is defined by bearing static load capacity. This curve should not be exceeded at any time including shock loads.
Die maximale radiale Wellenbelastungskurve ist definiert als maximale statische Last ohne Drehzahl. Sie gilt als Grenze und sollte keinesfalls überschritten werden.
La courbe de charge maximale est définie par la capacité de charge statique portante. Cette courbe ne devrait être dépassée en aucun moment y compris pour les charges par à-coups.
La curva de carga máxima queda definida por la capacidad de carga estática del cojinete. No se deben superar los valores de esta curva, ni siquiera con cargas provisorias de impacto.

Equation to Calculate the Expected Radial Bearing Life
Gleichung zur Ermittlung der Lagerlebensdauer

Equation to calculate the dynamic bearing life for a given load:
Bestimmung der erlaubten radialen Wellenbelastung mit vorgegebener Last

Use F_a, F_b and S in equation to determine hours of L_{10} bearing life.
Die Lebensdauer in Stunden ergibt sich durch einsetzen von F_a, F_b und S in die nachstehende Formel.

$$L = \frac{12 \times 10^6}{60 \times S} \left\{ \frac{F_a}{F_b} \right\}^{3.33}$$

Where / Mit:

S = Shaft Speed RPM / Abtriebswellendrehzahl in min^{-1}
L = Life In Hours / Lebensdauer in Stunden
F_a = Allowable side load defined by above curve at a distance from mounting flange. / Erlaubte radiale Wellenbelastung als Function der Laenge
F_b = Application side load. / Anwendungsseitige Wellenbelastung

Note: Calculations are based on L_{10} bearing life per ISO 281.
Auslegung basiert auf einer L_{10} Lenbendauer nach ISO 281.

Code: K5

Standard SAE CC, 1 5/16-12 SAE Rear Radial

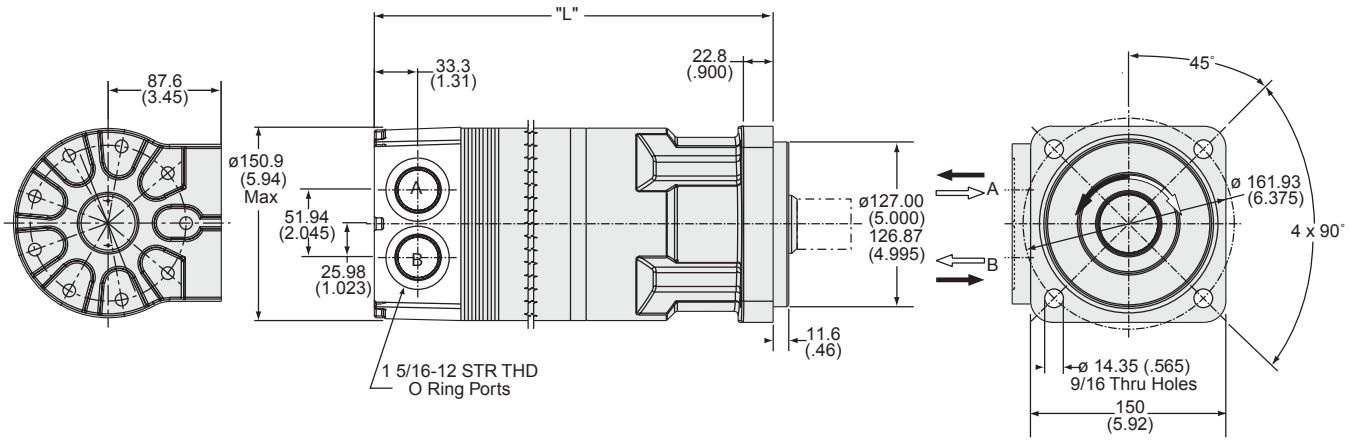

Code K5 disp.	0250	0315	0400	0500	0630	0800	1000
Weight/Gewicht kg	32.0	32.7	33.5	34.5	35.7	37.2	39.1
Poids/Peso (lb)	(70.6)	(72.0)	(73.8)	(76.0)	(78.8)	(82.1)	(86.3)
Length "L" mm	277	282	290	297	310	323	340
"L" (in)	(10.9)	(11.1)	(11.4)	(11.7)	(12.2)	(12.7)	(13.4)

Code: T5

Wheel Mount, 1 5/16-12 SAE Rear Radial

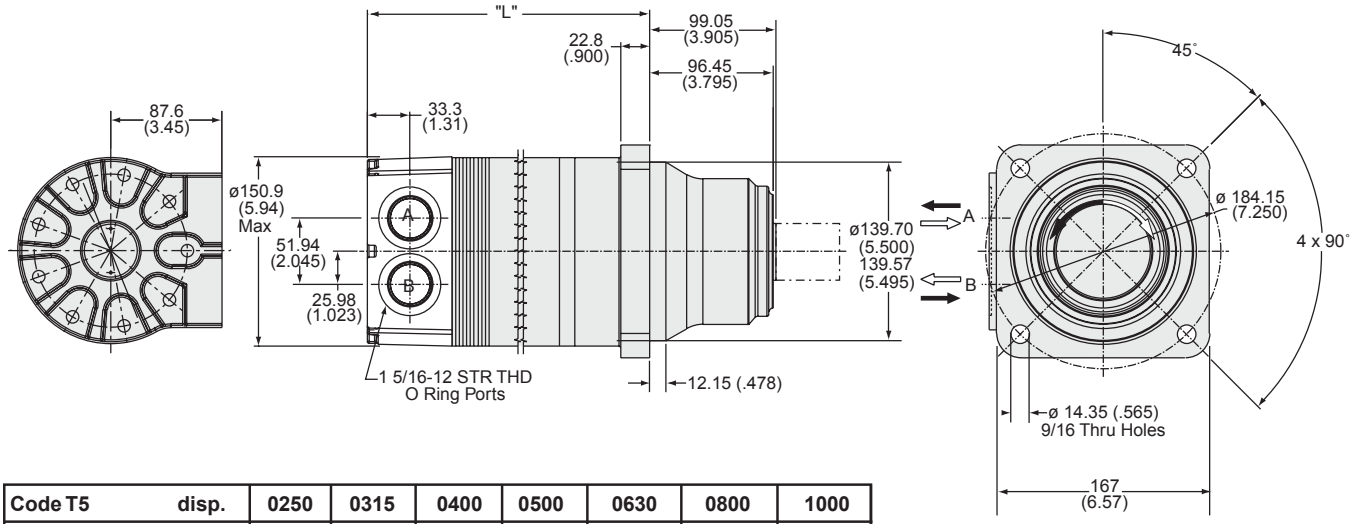

Code T5 disp.	0250	0315	0400	0500	0630	0800	1000
Weight/Gewicht kg	30.8	31.4	32.3	33.2	34.5	36.0	37.9
Poids/Peso (lb)	(67.9)	(69.3)	(71.1)	(73.3)	(76.1)	(79.4)	(83.5)
Length "L" mm	191	196	203	213	224	239	257
"L" (in)	(7.5)	(7.7)	(8.0)	(8.4)	(8.8)	(9.4)	(10.1)

English equivalents for metric specifications are shown in ( ).

017 TK.indd, js

Parker Hannifin Corporation
Hydraulic Pump/Motor Division
Greeneville, Tennessee, USA

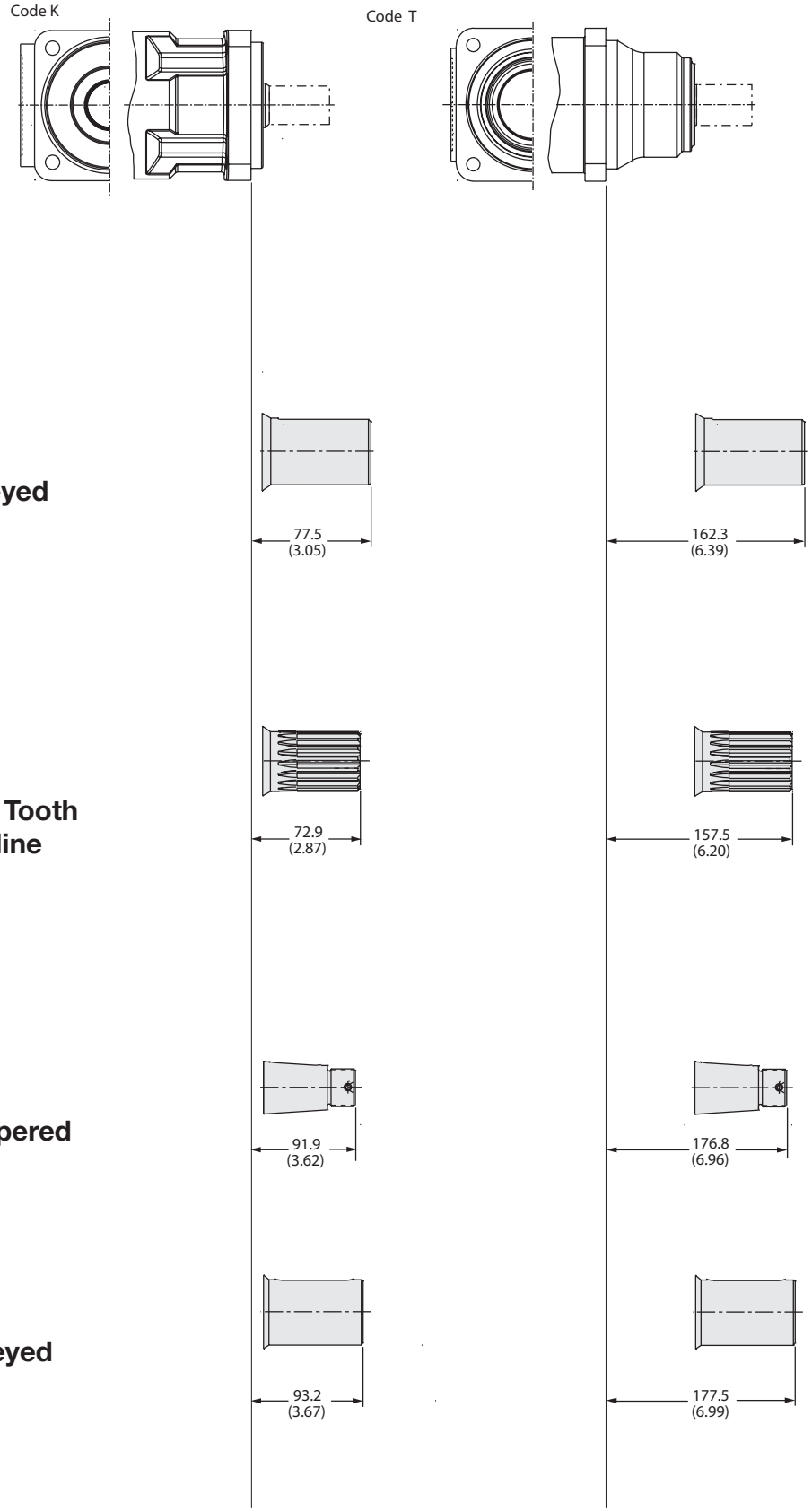

Code: 32

1 1/2” Keyed

Code: 36

1 1/2” 17 Tooth
12/24 Spline

Code: 63

1 3/4” Tapered

Code: 64

40mm Keyed

English equivalents for metric specifications are shown in ( ).

017 TK.indd, js

Parker Hannifin Corporation
Hydraulic Pump/Motor Division
Greeneville, Tennessee, USA

Code: 32

1 1/2” Keyed

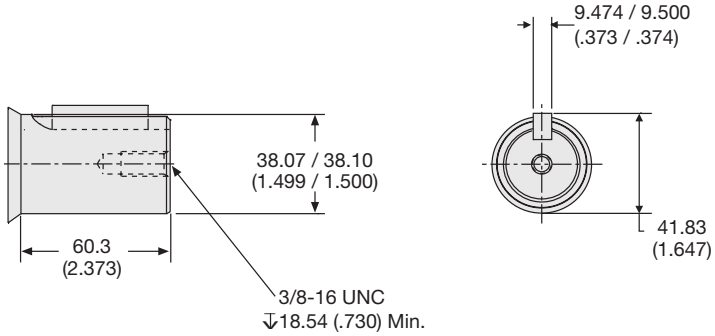

Code: 36

1 1/2” 17 Tooth
12/24 Spline

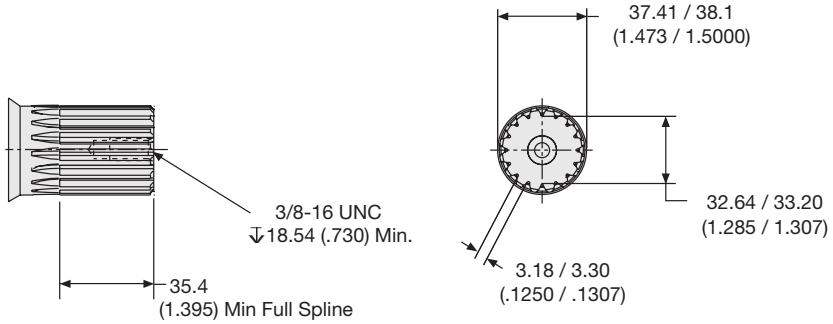

Code: 63

1 3/4” Tapered

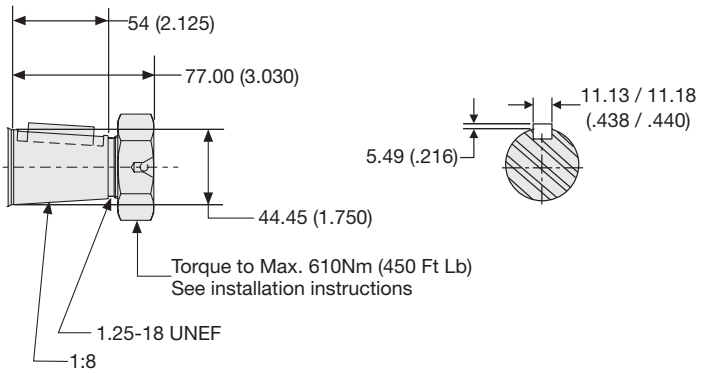

Code: 64

40mm Keyed

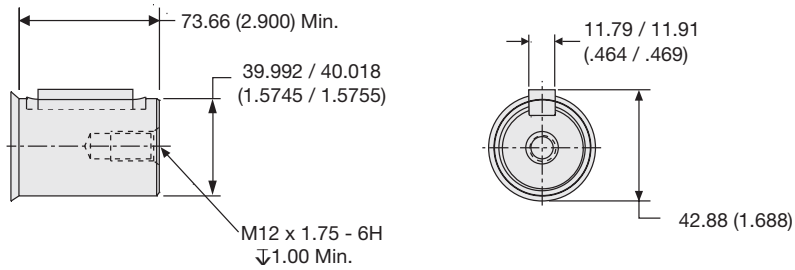

English equivalents for metric specifications are shown in ( ).

Code: FSAA* or FSAB EU US

An Economical Sensor for Speed Readout

This rugged, weather resistant design is ideal for industrial and mobile applications. Applications include salt/sand/fertilizer spreader drives, conveyer drives and injection molder compression drives. The sensor is a hall-effect type, which when externally powered outputs 30 square wave digital pulses per coupling shaft revolution. The connector is a user friendly universally available 4 pin polarized M12 connector allowing for simplified field service. The integrated design does not effect the side load capacity or performance of the torque motor.

Dieser robuste, wetterfeste Drehzahlaufnehmer arbeitet nach dem Halleffekt. Es werden 30 Rechteckimpulse pro Abtriebswellenumdrehung erzeugt. Durch Erfassung der positiven und negativen Wellenflanken sind 60 Impulse pro Umdrehung möglich. Der Sensor führt zu keiner Leistungsbeschränkung des Motors. Die volle Radiallastkapazität bleibt erhalten.

Un capteur economique pour mesure de la vitesse. Ce capteur robuste et resistant aux intemperies est a effet Hall. Alimente par une source externe, il fournit 30 ondes digitales carrees par tour. Par multiplication lelectronique on obient 60 pulsations par tour. Son montage ne modifie pas le couple ni la charge radiale du moteur qui le recoit.

Este es un diseño de construcción reforzada, apto para uso a la intemperie e ideal para uso industrial y en equipos móviles. Entre sus aplicaciones, se puede mencionar esparcidores de sal, arena o fertilizantes, unidades motoras de transportadores y unidades motoras de compresión para moldeo a inyección. El sensor es del tipo de medio efecto, que al ser excitado externamente, genera 30 pulsos digitales de onda cuadrada por cada revolución del eje del acoplamiento. Utiliza un simple conector M12 polarizado tetrapolar, que es de uso común y facilita el mantenimiento en el lugar de instalación. El diseño integrado no afecta la capacidad de carga lateral ni la potencia del motor de torque.

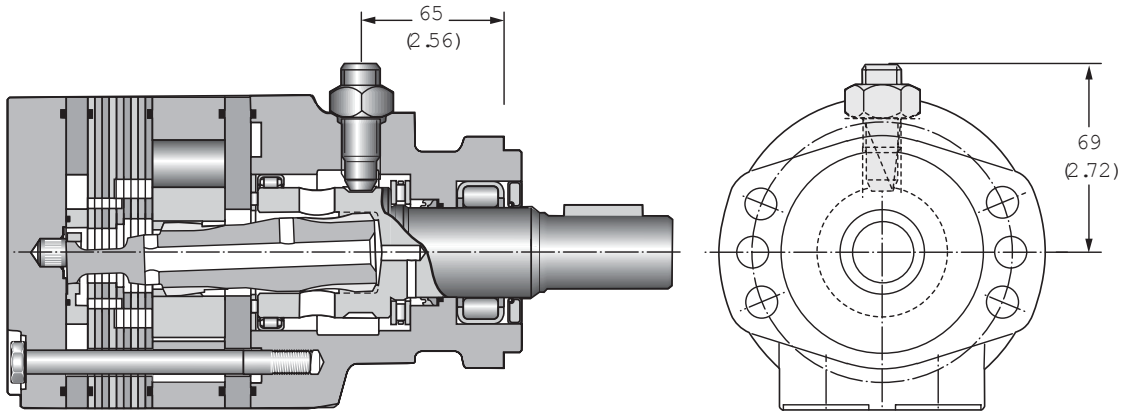

Maximum operating pressure 172 bar (2500 psi).

English equivalents for metric specifications are shown in ( ).

Operating voltage range **Versorgungsspannung** **Gamme de tension de service** **Gama de voltaje de alimentacion**	4.5...24 VDC
Operating temperature **Arbeitstemperatur** **Temperature de service** **Temperatura de servicio**	-20° to 220° F -29°...104° C
Operating frequency range **Arbeitsfrequenz** **Gamme de frequences de service** **Gama de frecuencia de servicio**	0...10 KHZ
Max sink current **Erforderlicher Laststrom** **Courant d'affaissement maxi** **Corriente maxima de alimentacion**	0 ... 20 mA (max.)
Connection **Anschluß** **Branchement** **Conexion**	4 Pin Polarized (12mm)
Sensor output **Sonsorausgang** **Sortie du détecteur** **Salida del sensor**	30 Pulses per revolution which can be doubled electronically 30 impulsions par revolution pouvant etre doublees electroniquement 30 pulsos por revlucion, que pueden duplicarse electronicamente
Output is NPN **Ausgang is NPN** **La sortie est NPN** **La salida es NPN**	Open Collector Collecteur ouvert Colector abierto

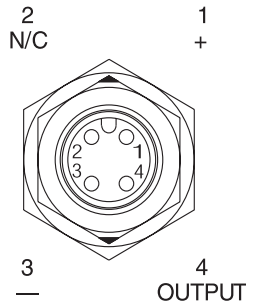

4 Pin Polarized
M12 Connector (Male)

Cable and "Pull Up" Resistor are *not* supplied by factory.

Zubehör wie z.B. Kabel gehören nicht zum Lieferumfang.

Le câble et la résistance "Pull Up" ne sont pas fournis par l'usine.

El cable y la resistencia de arranque no se suministran originalmente de fábrica.

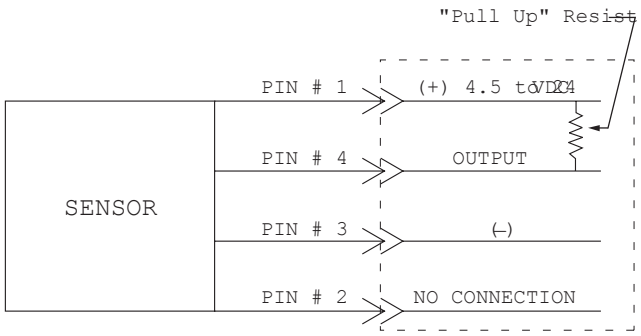

Pull-up Resistor Value Formula
Formel zur Ermittlung des Pull up-Widerstandes
Formule de la valeur de resistance "Pull-up"
Calculo de la resisancia de carga

(0.25 Watt, 5% de tol.)
(0.25 Watt, Tol. 5%)
(0.25 Watt 5% Tol.)
(0.25 Watt, toll. 5%)

$$\frac{\text{Voltage / Spannung Curant d'affaisement / Voltaje } 4.5...24\text{ VDC}}{\text{Sink Current / Laststrom Resistance / Corriente de ali mentacion } 0...20\text{ mA}} = \text{Resistor / Widerstand / Resistance / Resistancia (k Ohm)}$$

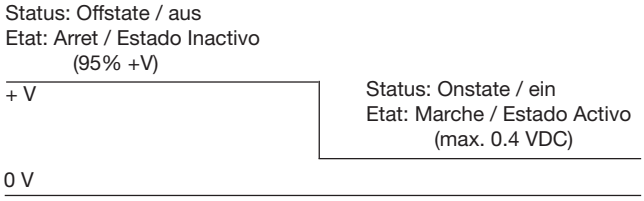

Code: AAFX or AAAT* EU US

A Hot Oil Shuttle is used to continuously remove a portion of the fluid in a closed loop transmission or other closed loop system. At 125 PSI pressure differential between the motor return port and the shuttle outlet,1.5 GPM* will exit the circuit to cool, filter and return to the reservoir. The constant loop replenishment helps to keep heat and contamination from building up in the circuit. This option is not available with rear ports or integral cross over relief.

Spülventil für geschlossene Systeme zur Rückführung einer definierten Menge des Niederdrucköls in den Tank zur Abkühlung innerhalb desselben Kreislaufs.

Valve de rincage pour systèmes fermès pour le retour d`un volume dèterminè de fluide basse pression vers le rèservoir, un refroidisseur ou un filtre de rèfrigèration, dans le même circuit.

Un transferidor de aceite caliente actúa permanentemente para extraer una parte del fluido en una transmisión de circuito cerrado u otro sistema de circuito cerrado. Entre la entrada de retorno del motor y la salida del transferidor hay una diferencia de presión de 125 psi (libras/pulg.^{2}), y a esta presión salen 1,5 galones por minuto del circuito para enfriarse, filtrarse y volver al depósito de fluido. El reacondicionamiento permanente de parte del fluido evita la contaminación del mismo y el incremento de temperatura en el circuito.

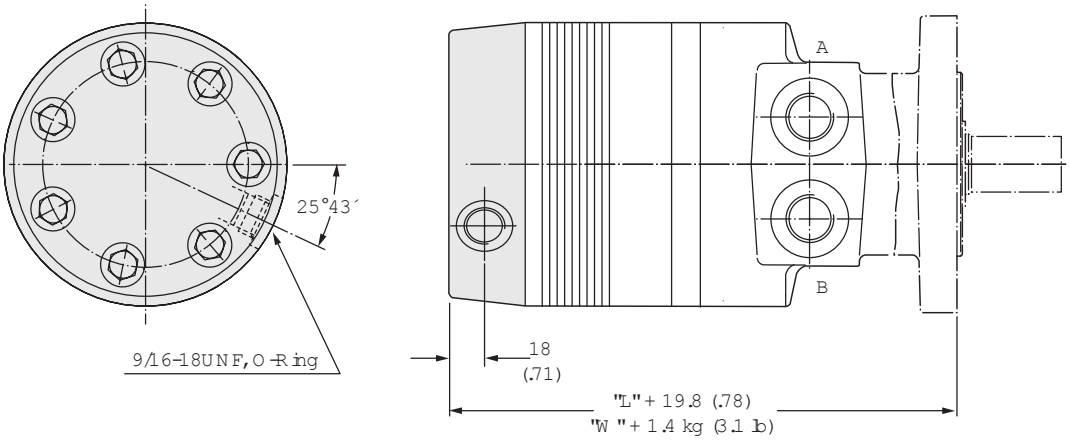

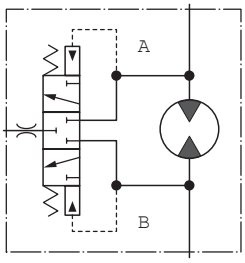

Q=5 l p=9 bar ϑ=39 cSt
(Q=1.32 gal) (p=131 psi) (ϑ=190 SUS)

Standard Length & Weights for TF Series on Pages 84-85, TG Series on Pages 120-121 and TH Series on Pages 150-151.
Längen/Gewichte TF Serie Seiten 84-85, TG Serie Seiten 120-121, TH Serie Seiten 150-151.
Longueurs et poids courants pour la série TF, voir les pages 84-85, et la série TG, voir les pages 120-121, et la série TH, voir les pages 150-151.
Los valores estándar de longitud y peso de la Serie TF se puede ver en las Páginas 84-85, y de la Serie TG en las Páginas 120-121, y de la Serie TH en las Páginas 150-151.

English equivalents for metric specifications are shown in ( ).

Code: BBBA*, BBBB*, BBBC*, BBBD* or BBBG* EU US

This integrated internal relief valve is used for fixed pressure settings.

Internes Schockventil
La soupape de sécurité interne utilise pour des valeurs de pression fixes.
La valvula interna de alivio se utiliza para cablibraciones fijas de presion.

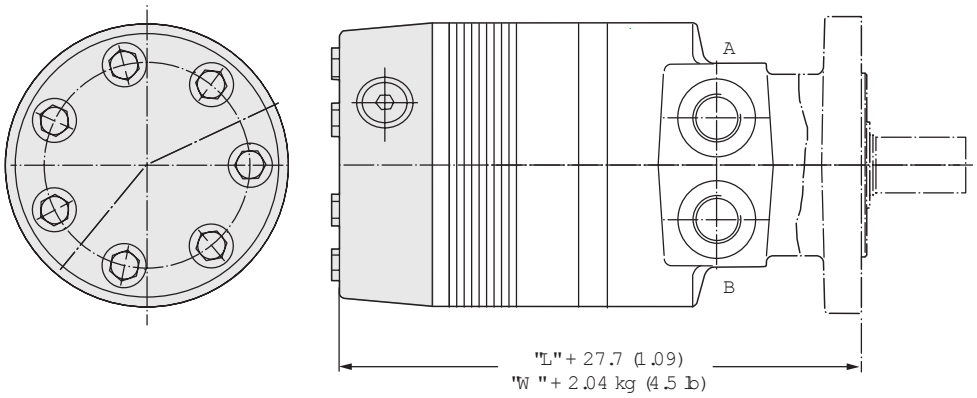

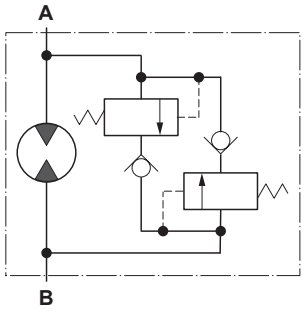

Bestellschlüssel / Systéme de Commande / Ordering system / Informacion para pedidos

Option		Pressure bar (psi)
*	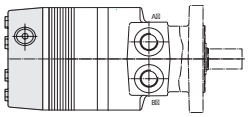 **Öffnungsdruck** **Opening pressure** **Tarage** **Presion de apertura**	69 (1000)
*		138 (2000)
*		207 (3000)
*		276 (4000)
*		103 (1500)

Standard Length & Weights for TF Series on Pages 84-85, TG Series on Pages 109-111 and TH Series on Pages 139-140.
Längen/Gewichte TF Serie Seiten 84-85, TG Serie Seiten 109-111, TH Serie Seiten 139-140.
Longueurs et poids courants pour la série TF, voir les pages 84-85, et la série TG, voir les pages 109-111, et la série TH, voir les pages 139-140.
Los valores estándar de longitud y peso de la Serie TF se puede ver en las Páginas 84-85, y de la Serie TG en las Páginas 109-111, y de la Serie TH en las Páginas 139-140.

English equivalents for metric specifications are shown in ( ).

Code: AAAC US

Double Paint — Base coat of red oxide primer and finish coat of black paint for increased corrosion resistance.

Code: AAAF* or AABP EU US

Castle Nut — All motors ordered with Tapered shafts are equipped with patch locking nuts. If desired, a castle nut may be specified.

Code: AAAJ* or AAFG EU US

Vespel™ Commutator Seal — Under conditions of high temperature, it is suggested that a vespel commutator seal be used.

Code: AAAG* or AAAH EU US

Fluorocarbon — is available under various registered trademarks, including VITON™ (a registered trademark of DuPont), FLUOREL™ (a registered trademark of 3M) or FPM™ (a registered trademark of DuPont).

Code: AABJ* or AABK EU US

Free Running Rotorset — The “free running rotorset” is a specially dimensioned rotorset that allows for smoother operation at low flows and low pressure. Volumetric efficiency can be affected.

Code: AANM* EU US

Seal Saver — Seal saver is a metal disc that presses onto the motor shaft, covering the dirt and water (D&W) seal. It’s purpose is to aid in preventing external contamination from damaging the D&W seal.

Code: AAAC

Zweischichtlackierung schwarz

Code AAAF* or AABP

Kronenmutter
Selbstsichernde Mutter wird ersetzt durch Kronenmutter

Code: AAAJ* or AAFG

Vespel™ / Kommutator Dichtung
Für Anwendungen im höheren Temperaturbereich oder nicht ausreichender Schmierung.

Code: AAAG* or AAAH

Fluorocarbon Dichtungen
Für Anwendungen im höheren/niedrigeren Tenperaturenbereich oder speziellen Flüssigkeiten wird der Einsatz von Fluorcarbon Dichtungen empfohlen. Fluorocarbon ist bekannt unter verschiedenen eingetragenen Warenzeichen

VITON™ - DuPont, Fluorel™ - 3M, FPM™ - DuPont

Code: AABJ* or AABK

Leichtläufer Rotorsatz
Anlaufdruck < 5 bar

Code: AANM*

Versiegelungsschutz — Der Versiegelungsschutz besteht aus einer Metallscheibe, die gegen die Antriebswelle druckt und damit Schmutz- und Wasserdichtung (D&W-Dichtung) abdeckt. Hierdurch soll einer Beschadigung der D&W-Dichtung auf Grund externer Verunreinigungen vorgebeugt werden.

* Option code shown is with a single black coat of paint.
* Motor schwarz grundiert

Availability							Code		
TF/DF	Clutch	TG/DG	TH	BG/BH	TK	TL	Painted	Unpainted	Description
US	US	US	US	US	US	US	AAAA	AAAB	Black Paint
US		US	US	US	US		AAAC	-	Double Paint
US		US	US	US	US		AAAF	AABP	Castle Nut
US	US	US	US	US	US		AAAG	AAAH	Fluorocarbon Seals
US		US	US	US	US		AAAJ	AAFG	Vespel™ Commutator Seal
US		US	US	US			AABJ*	AABK*	Free Running Rotorset
US		US	US	US			AAAT**	AAFX**	Hot Oil Shuttle (11:00)
US		US					AANM	-	Seal saver for 1.25 taper shaft only
US		US		US			AANB	-	678 Nm (6000 in-lb) Holding Capacity
				US			AAMN	AANH	1808 Nm (16000 in-lb) Holding Capacity
						US	AAWM	AAWL	Fluorocarbon shaft seal.
US		US	US	US		US	AAAU**	-	Bi-directional Shuttle (11:00*), Castle Nut
US		US	US	US		US	AAAW**	-	Bi-directional Shuttle (11:00*), Vespel™ Commutator Seal
US	US	US	US	US			AABL*	AABM*	Free Running Rotor Set & No Commutator Seal
US	US	US	US	US	US		AABT	-	No Nut
US		US	US	US	US	US	AACP*	-	Free Running Rotor Set, Castle Nut
US	US	US	US	US	US	US	-	AADJ	Vespel™ Commutator Seal, Castle Nut
US	US	US		US	US	US	AAFW	-	Fluorocarbon (Viton) Seals, Vespel™ Commutator Seal
US	US	US	US	US		US	-	AAFX**	Bidirectional shuttle (11:00*)
US	US	US	US	US	US	US	AAHU	-	Vespel™ Commutator Seal, No Nut
US	US	US	US	US	US	US	-	AAJL	No Nut
US	US	US	US	US		US	AALD**	-	Bidirectional shuttle (1:00*), Castle Nut
US	US	US	US	US		US	AALE**	-	Bidirectional shuttle (1:00*)
US	US	US	US	US	US		AALF	-	No Commutator Seal
US	US	US	US	US			-	AALP*	Free Running Rotor Set, Fluorocarbon (Viton) Seals, Vespel™ Commutator Seal
				US			AAML**	-	(IBM) Bidirectional shuttle (11:00*), Castle Nut, 6 Brake Springs Installed
				US			AAMM	-	(IBM) Castle Nut, 6 brake springs installed, (9000 in-lbs hold cap)
				US			AAMN	-	(IBM) 'Yellow' brake springs (8), (16,000 in-lbs hold cap)
				US			AAMP	-	(IBM) 'Yellow' brake springs (8), (16,000 in-lbs hold cap), Castle Nut
US		US	US	US			BBBA**	BBBM**	69 Bar (1000 PSI) Internal Bidirectional Relief
US		US	US	US			BBBG**	BBBJ**	103 Bar (1500 PSI) nternal Bidirectional Relief
US	US	US	US				BBBB**	BBBN**	138 Bar (2000 PSI) Internal Bidirectional Relief
US	US	US	US	US			BBBC**	BBBF**	207 Bar (3000 PSI) Internal Bidirectional Relief
US		US	US	US			BBBD**	BBBW**	276 Bar (4000 PSI) Internal Bidirectional Relief
US		US	US				-	BBCG**	2500 PSI Int Bidirectional Relief
US		US	US				-	BBCW**	3000 PSI Int Bidirectional Relief, No Nut
US		US	US				BBCX**	-	2500 PSI Int Bidirectional Relief, No Nut
US		US	US				-	BBDA**	3000 PSI Int Bidirectional Relief, Castle Nut
US		US	US				-	BBDH**	2500 PSI Int Bidirectional Relief, Castle Nut
US		US	US				BBDN**	-	1750 PSI Int Bidirectional Relief
US		US	US				-	BBDP**	725 PSI Int Bidirectional Relief
US		US	US				BBDW**	-	725 PSI CCW Int Bidirectional Relief (045134)
US		US	US				FSAA	FSAB	Speed Sensor
US		US					FSAJ	FSAH	Int Short Speed Sensor, Castle Nut
US		US	US				-	AAUY	Complete Motor Nickel Plated, 40 um, Except Shaft
Consult factory for other positions and combinations.									

* Not applicable to TF, TG or TH 0625, 0785 or 0960 displacement codes.
** Not available with A, B, E, Y, X or L porting. If specifying internal bidirectional reliefs, relief settings cannot exceed intermittent pressure rating of motor.

Fluid

To insure maximum motor performance and life, use a premium grade hydraulic or engine oil. Fluids with a minimum of .125% zinc (or equivalent) anti-wear package should be used. A mineral or synthetic based 10W40 engine oil or hydraulic (200 SUS) is recommended. Torqmotor™ seals come standard in nitrile rubber. If a fluid that is not compatible with nitrile is to be used, a fluoroelastomer seal material can be specified.

- Minimum fluid viscosity is 50 SUS
- Recommended fluid operating temperature is -28° C to 93° C (-20°F to 200° F)
- Filtration level is 20-50 micron nominal

Pressure

Operating the motor in its intermittent pressure range will shorten the life of the motor and should generally be restricted to 10% or less per minute. The reduced life resulting from continuous operation in the intermittent range may be acceptable in some applications. Consult the factory for details.

Shaft Loading

The use of 1 inch and 25mm diameter shafts are not recommended when torque loads exceed 3500 lb-in. 316 stainless shafts should be limited to 2000 lb-in. For 7/8 inch diameter shafts, torque should be limited to 2500 lb-in. Corrosion resistant Nitrotec shafts have reduced torque-carrying capability. Consult factory for values for specific shafts. The maximum thrust load on all shafts should not exceed 1000 lbs inward or outward.

Performance Data

Performance data shown in this catalog is the result of testing performed using 10W40 oil at 54°C (130°F), 200 SUS. Actual performance will vary with fluid conditions. Lower viscosity will produce lower performance.

Inlet Conditions

Positive pressure *must* be available at the motor inlet while it is rotating. If an overrunning load causes the motor to rotate faster than the pump can fill it, cavitation will occur. Consult the factory for inlet pressure requirements and speed limitations.

Other Operating Conditions

Consult factory before operating at conditions exceeding any ratings or recommendations in this catalog.

Installation Recommendations

- To avoid contamination do not remove plastic port plugs until fittings are to be installed.
- Motor mounting flange must make full contact with equipment mount; do not use the mounting bolts to force the motor pilot into the pilot hole to align the motor.
- Pulleys, sprockets, wheels, or couplings should be properly aligned on the shaft to avoid excessive radial or thrust loads.
- To avoid damaging the thrust system, do not hammer on the motor or shaft to install or remove couplings, pulleys, sprockets, etc.

Tapered Shaft

The tightening torque listed for a taper shaft nut is based on strength of the shaft and nut. Hub design and hub material determine the application tightening torque. Refer to hub manufacturers specifications to determine actual assembly torque. Factory suggested assembly torques are: 250-400 lb-ft (1.25, 1.5 & 1.75 Dia. Shafts), 175-225 lb-ft (1.0 dia. shafts).

To insure a sound hub to shaft coupling, the hub must conform to the full length of the shaft taper. This will prevent bending stresses at the keyway that could cause a fatigue failure.

Castle Nut

All motors ordered with Tapered shafts are equipped with patch locking nuts. If desired, a castle nut may be specified.

Paint

Unless specified otherwise, motors are shipped unpainted and coated with a rust inhibitor. Paint options are:

* Single coat of black paint.
* Single coat of black paint plus a coat of red oxide primer. (Double paint).

Reverse Timed Manifold

All motors in this catalog are bi-rotational. The efficiency of the motors is essentially unaffected by direction of rotation.

The direction of output shaft rotation depicted below is that which will result from pressurizing the “A” port of the motor. Pressurizing the “B” port will cause shaft rotation in the opposite direction. Direction of rotation is as seen by looking directly at the shaft.

“Front ported” motors have the ports at the shaft end of the motor. “Rear ported” motors have the ports in the end cap of the motor. Standard motors are Rotation Code “0”. Reverse timed motors are Rotation Code “1”.

Series	Standard Code “0”		Reverse Timed Code “1”	
	Front Ported	Rear Ported	Front Ported	Rear Ported
TC, TB, TE, TJ	CW	CCW	CCW	CW
TF, DF, TG, BG, DG, TH, BH	CCW	CW	CW	CCW
TK	N/A	CW	N/A	CCW
110A	CW	N/A	N/A	N/A
700, 716	CCW	N/A	N/A	N/A

CAUTION!

Static Brake Only:

The brakes on these motors are designed for static use only, i.e., the brake should not be used to stop the motor and the motor should not be started while the brake is applied. These brakes are "parking" brakes only. Using the brake in a dynamic condition (while the motor is turning) will damage and reduce the holding capacity of the brake. If the brake does not hold because it has been damaged, personal injury or property damage could result.

Brake holding capacity and periodic test:

The brake holding capacity rating is based on actual holding capacity when new. If properly used as a static brake only, the holding capacity will slowly decrease with time. Since holding capacity will slowly decrease over time, a proper maintenance procedure should include periodically testing the holding capacity of the brake. This can be achieved by running a vehicle ramp test per OEM instructions.

Brake orientation:

This wet sump, multi-disk brake is designed to be mounted with the shaft in a horizontal position. If your application will have the motor in any other orientation, the motor should be thoroughly tested for longevity of brake holding capacity. This can be achieved by running a vehicle ramp test per OEM instructions after a predetermined number of brake actuations. Under no circumstances, however, should the motor be mounted with the shaft pointing vertically upward because the disks will not be operating within the oil sump and damage to the brake disks will occur.

Brake release pressure:

The brake release port is designed for 3000 psi maximum. Limiting the pressure in that port to below 1500 psi is recommended to enhance seal life.

Initial use, bleeding not required:

Bleeding the brake is not required. It is recommended that the brake release port be filled with approximately 1.2 oz. (36cc) system oil prior to installation or first use.

Torque for mounting bolts:

Customer installed mounting bolts should be grade 8 and torqued to a minimum of 90 ft-lbs.

Brake service intervals:

The seals, springs and brake disc package should be periodically (how often depends on your application) inspected and replaced if damaged or worn. All should be replaced at least every 250,000 brake cycles or 3 years, whichever occurs first.

9 Displacements **9 Schluckvolumen** **9 Cylindrée** **9 Despazamientos**		(3.6 – 24.1 in³/rev) **59…395 cm³/rev**
	Cont	**Int**
Maximum Pressure **Eingangsdruck** **Pression entrée** **Presion Maxima**	(2500 psid) **…172.4 bar**	(3000 psid) **…206.8 bar**
Maximum Oil Flow **Schluckstrom** **Débit d'huile** **Caudal Maximo de Aceite**		(30 gpm) **…113.6 lpm**
Maximum Speed **Drehzahl** **Vitesse de rotation** **Velocidad Maxima**		**858 rpm**
	Cont	**Int**
Maximum Torque **Max Drehmoment** **Couple** **Torque Maximo**	(4164 lb in) **…470 Nm**	(5215 lb in) **…589 Nm**
Maximum Side Load at Key **Seitenlast** **Charges latèrales** **Carga Maxima Lateral**		(1450 lb) **… 6450 N**

When the Ultimate in Efficiency and Reliability is a Must

This high performance motor contains a power element that is pressure loaded against internal leakage for high volumetric efficiency. It is wear compensated, so that its volumetric efficiency will not degrade with use. It can provide up to 5215 lb-in of torque through a one-piece solid fixed axis shaft. This shaft design allows for full stationary spline contact between shaft and rotor, minimizing spline contact stresses. It also allows the shaft to be extended through the rear cover for mounting parking brakes, auxiliary drive functions or encoders for speed readout or closed loop control. Low internal pressure drop means high mechanical efficiency and higher flow capability. This rugged motor is the most compact on the market.

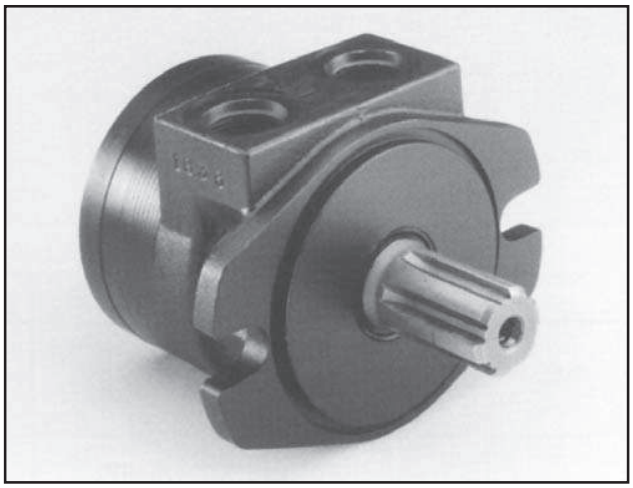

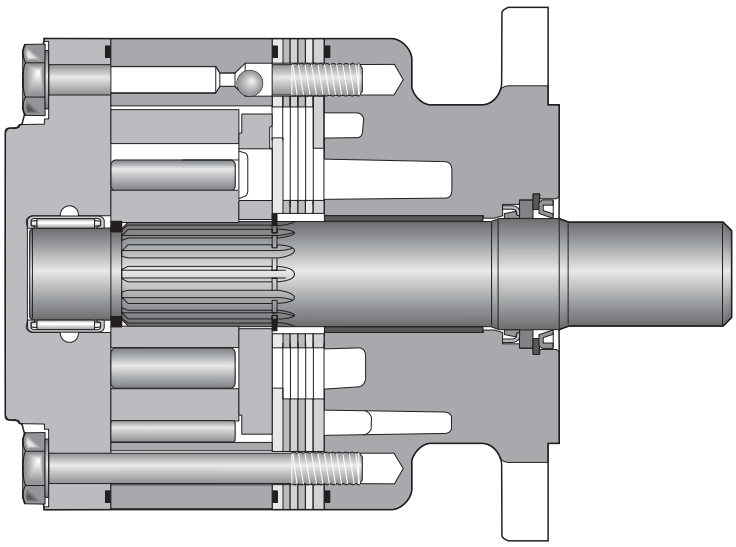

11	X	A	-	XXX	-	X X	-	X	-	X	X	X

Series

Shaft
Welle
Arbre
Ejes

Engineering Design
technischer Entwurf
Conception technique
Diseño de ingeniería

Displacement
Schluckvolumen
Cylindrée
Desplazamiento

Mounting
Gehäuse
Carter
Montaje

Ports
Anschluß
Plan de raccordement
Lumbreras

Thru-Shaft
durchgehende Welle
arbre traversant
Eje pasante

Shaft Material
Wellenmaterial
Matériel d'arbre
Material del eje

Cross-Over Relief Valve
Bremslüftventil
Soupape de sûreté transversale
Válvula de alivio transversal

Paint

Code	
0	1" Keyed 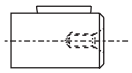
1	1" 6B Spline 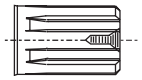
2	25mm Keyed 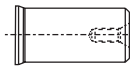
3	1-1/4" Keyed 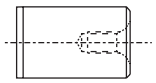
5	1-1/4"-14 Tooth Spline 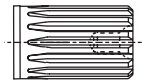
6	7/8"-13 Tooth Spline 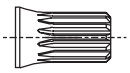

Code	cm³/U cm³/tr cm³/giro in³/rev
036	59 / 3.6
054	89 / 5.4
071	116 / 7.1
088	144 / 8.8
106	174 / 10.6
129	211 / 12.9
164	269 / 16.4
189	310 / 18.9
241	395 / 24.1

Code	
AM	SAE A 2-Bolt, Manifold 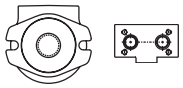
AS	SAE A 2-Bolt, 7/8"-14 SAE 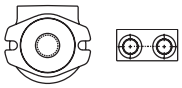
AP	SAE A 2-Bolt, 1/2"-14 NPTF 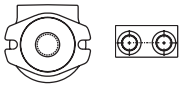
BM	SAE B 2-Bolt, Manifold
BS	SAE B 2-Bolt, 7/8"-14 SAE

Code	
0	No Thru Shaft
1	Thru Shaft
E	Encoder

Code	
Omit	If Not Required
S	Stainless Steel

Code	
Omit	If Not Required
R1	Cross-Over Relief Valve

Code	
Omit	No Paint
F	Black Paint Schwarz lackiert

Consult factory for other available options, configurations ordering codes and lead times.

020 110A.indd, js

Parker Hannifin Corporation
Hydraulic Pump/Motor Division
Greeneville, Tennessee, USA

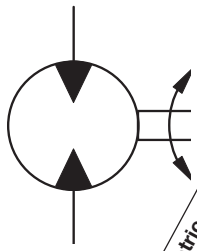

Motor Series 110A	Geometric displacement / Geom. Schluckvolumen / Cylindrée / Cilindrata	Max. speed @ Max. intermittent flow / Max. Drehzahl Intermittierender Betrieb: / Vitesse de rotation maxi / Velocidad maxima a caudal intermitente maximo	Max. oil flow / Max. Schluckstrom / Débit d'huile maxi / Portata max		Max. differential pressure / Max. Druckgefälle / Chute de pression maxi / Presion diferencial maxima		Max. supply pressure / Max. Eingangsdruck / Pression maxi entrée / Presion maxima de alimentacion	Max. torque / Max. Drehmoment / Couple maxi / Torque Maximo		Max. performance / Max. Leistungabgabe / Puissance de sortie maxi / Maximo rendimento
	cm^3/rev in^3/rev	rev/min	***cont / int**** **l/min** g/min		***cont / int**** **bar** psid		***max*** **bar** psig	***cont / int**** **Nm** lb-in		***max*** **KW** HP
110A 036	**59** 3.6	858	**45.4** 12	**53** 14	**170** 2500	**210** 3000	**225** 3250	**127** 1125	**149** 1319	**8.5** 11.4
110A 054	**89** 5.4	740	**60.6** 16	**68.1** 18	**170** 2500	**210** 3000	**225** 3250	**182** 1608	**213** 1884	**11.2** 15.1
110A 071	**116** 7.1	684	**75.7** 20	**83.3** 22	**170** 2500	**210** 3000	**225** 3250	**256** 2267	**308** 2725	**14.2** 19.1
110A 088	**144** 8.8	622	**75.7** 20	**94.6** 25	**170** 2500	**210** 3000	**225** 3250	**324** 2874	**389** 3449	**14.6** 19.6
110A 106	**174** 10.6	519	**75.7** 20	**94.5** 25	**155** 2250	**210** 3000	**225** 3250	**352** 3115	**465** 4121	**13.1** 17.6
110A 129	**211** 12.9	437	**75.7** 20	**94.6** 25	**155** 2250	**190** 2750	**225** 3250	**412** 3651	**503** 4453	**12.9** 17.3
110A 164	**269** 16.4	415	**75.7** 20	**114** 30	**140** 2000	**170** 2500	**225** 3250	**470** 4164	**589** 5215	**12.1** 16.2
110A 189	**310** 18.9	350	**75.7** 20	**114** 30	**140** 2000	**170** 2500	**225** 3250	**542** 4803	**675** 5977	**7.9** 10.6
110A 241	**395** 24.1	279	**75.7** 20	**114** 30	**120** 1750	**155** 2250	**225** 3250	**594** 5261	**764** 6765	**9.2** 12.4

Performance data based on tests using 15W40 oil with a viscosity of 55 cSt (215 SUS) at 54° C (130° F.) Performance data is typical. Actual data may vary slightly from one production motor to another.

Les donnees sur les performances sont basees sur des tests utilisant de l'huile 15W40 d'une viscosite de 55 cSt (215 SUS) a 54°C (130°F). Ces donnees correspondent a des situations typiques. Les donnees reelles peuvent varier legerement d'un moteur de production a l'autre.

Leistugsdaten sind gemessen mit SAE 15W40 bei einer Viskositaet von 43,1 Cst beo 54°C. Geringfuegige Abweichungen von den Katalogerten sond moeglich.

Datos tecnicos obtenidos con aceite 15W40 de 55 cSt (215 SUS) de viscosidad a 54°C (130°F). Los datos proporcionados son valores tipcos. Los valores exactos reales podrian tener una pequena variacion entre distintos motores.

* Intermittent operation rating applies to 10% of every minute.
Intermittierende Werte maximal 10% von jeder Betriebsminute.
Fonctionnement interm. 10% max. de chaque minute d`utilisation.
Capacidad de funcionamiento intermitente valida para 10% por cada minuto.

110A 036

3.6 cu in / rev

PRESSURE (PSID)

FLOW (GPM)	500	1000	1500	2000	2500	3000	3500
2	244 **128**	473 **124**	688 **119**	882 **105**	1031 **82**		
4	238 **257**	471 **251**	700 **245**	905 **226**	1067 **193**	1203 **139**	1293 **87**
6	232 **385**	470 **381**	713 **377**	928 **362**	1103 **331**	1255 **289**	1344 **250**
8	226 **513**	461 **508**	700 **503**	922 **490**	1117 **454**	1289 **403**	1404 **359**
10	221 **642**	453 **635**	688 **629**	917 **622**	1132 **584**	1324 **526**	1464 **481**
12	216 **770**	443 **762**	675 **755**	897 **747**	1117 **708**	1349 **651**	1564 **601**
14	212 **898**	433 **889**	662 **880**	877 **871**	1103 **835**	1375 **782**	1664 **728**

59 cc / rev

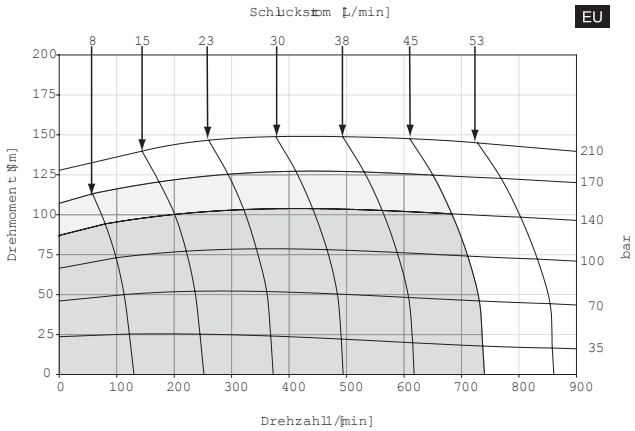

TORQUE (LB IN) 1664
SPEED (RPM) 728

110A 054

5.4 cu in / rev

PRESSURE (PSID)

FLOW (GPM)	500	1000	1500	2000	2500	3000	3500
2	365 **86**	716 **83**	1051 **80**	1368 **72**	1635 **58**		
4	365 **171**	713 **167**	1076 **164**	1407 **153**	1700 **134**	1957 **101**	2134 **60**
6	361 **257**	722 **253**	1100 **250**	1445 **244**	1765 **226**	2055 **198**	2278 **171**
8	352 **342**	713 **338**	1057 **334**	1419 **329**	1731 **309**	2020 **278**	2237 **247**
10	340 **428**	713 **424**	1057 **419**	1392 **415**	1697 **396**	1985 **366**	2196 **332**
12	331 **513**	679 **508**	1038 **503**	1382 **498**	1697 **480**	2011 **450**	2316 **408**
14	318 **599**	653 **593**	1019 **587**	1372 **581**	1732 **566**	2129 **536**	2543 **488**
16	309 **684**	636 **678**	987 **671**	1335 **664**	1700 **645**	2091 **618**	2491 **566**
18	281 **770**	600 **762**	955 **755**	1298 **747**	1668 **724**	2052 **701**	2438 **647**
20	264 **856**	567 **849**	880 **843**	1220 **830**	1581 **804**	1947 **785**	2235 **729**
22	247 **942**	541 **936**	824 **931**	1390 **913**	1593 **885**	2026 **871**	2423 **813**

89 cc / rev

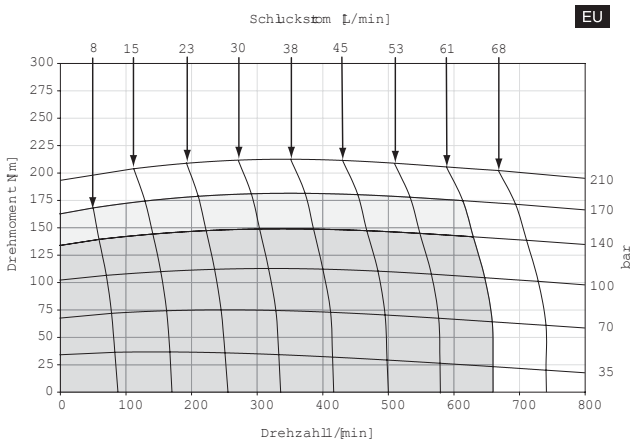

TORQUE (LB IN) 2491
SPEED (RPM) 566

Cont. | Cont. with no side load / Int. with rated side load | Int.

Intermittent operation rating applies to 10% of every minute.

Fonctionnement interm. 10% max. de chaque minute d'utilisation.

Performance data based on tests using 15W40 oil with a viscosity of 55 cSt (215 SUS) at 54° C (130° F.) Performance data is typical. Actual data may vary slightly from one production motor to another.

Les donnees sur les performances sont basees sur des tests utilisant de l'huile 15W40 d'une viscosite de 55 cSt (215 SUS) a 54°C (130°F). Ces donnees correspondent a des situations typiques. Les donnees reelles peuvent varier legerement d'un moteur de production a l'autre.

Intermittierende Werte maximal 10% von jeder Betriebsminute.

Capacidad de funcionamiento intermitente valida para 10% por cada minuto.

Leistugsdaten sind gemessen mit SAE 15W40 bei einer Viskositaet von 43,1 Cst beo 54°C. Geringfuegige Abweichungen von den Katalogerten sond moeglich.

Datos tecnicos obtenidos con aceite 15W40 de 55 cSt (215 SUS) de viscosidad a 54°C (130°F). Los datos proporcionados son valores tipcos. Los valores exactos reales podrian tener una pequena variacion entre distintos motores.

110A 071

7.1 cu in / rev

PRESSURE (PSID)

	500	1000	1500	2000	2500	3000	3500
2	480 **65**	949 **63**	1407 **62**	1853 **56**	2260 **47**		
4	480 **130**	994 **128**	1492 **125**	1989 **118**	2430 **105**	2848 **83**	3243 **47**
6	458 **195**	972 **192**	1483 **189**	1966 **187**	2458 **176**	2915 **154**	3322 **133**
8	446 **260**	961 **258**	1475 **255**	1966 **251**	2458 **239**	2915 **219**	3362 **193**
10	424 **325**	927 **322**	1449 **319**	1944 **316**	2444 **306**	2915 **290**	3382 **260**
12	412 **390**	904 **387**	1407 **383**	1921 **379**	2444 **371**	2898 **353**	3391 **316**
14	396 **455**	859 **451**	1373 **447**	1876 **442**	2373 **437**	2882 **419**	3401 **374**
16	379 **521**	825 **515**	1339 **510**	1853 **505**	2345 **497**	2848 **482**	3342 **429**
18	362 **586**	791 **580**	1288 **574**	1785 **568**	2317 **556**	2814 **545**	3283 **486**
20	339 **651**	757 **644**	1237 **638**	1763 **631**	2288 **618**	2780 **608**	3243 **543**
22	305 **716**	701 **709**	1187 **701**	1740 **694**	2232 **680**	2746 **673**	3243 **601**

FLOW (GPM)

TORQUE (LB IN) 701
SPEED (RPM) 709

116 cc / rev

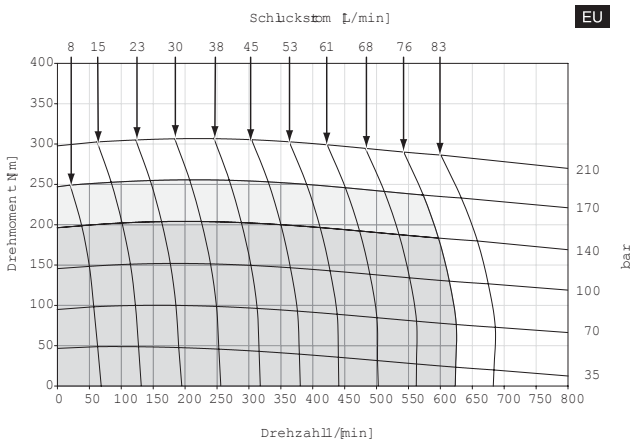

Cont. | Cont. with no side load / Int. with rated side load | Int.

Intermittent operation rating applies to 10% of every minute.

Fonctionnement interm. 10% max. de chaque minute d`utilisation.

Performance data based on tests using 15W40 oil with a viscosity of 55 cSt (215 SUS) at 54° C (130° F.) Performance data is typical. Actual data may vary slightly from one production motor to another.

Les donnees sur les performances sont basees sur des tests utilisant de l'huile 15W40 d'une viscosite de 55 cSt (215 SUS) a 54°C (130°F). Ces donnees correspondent a des situations typiques. Les donnees reelles peuvent varier legerement d'un moteur de production a l'autre.

Intermittierende Werte maximal 10% von jeder Betriebsminute.

Capacidad de funcionamiento intermitente valida para 10% por cada minuto.

Leistugsdaten sind gemessen mit SAE 15W40 bei einer Viskositaet von 43,1 Cst beo 54°C. Geringfuegige Abweichungen von den Katalogerten sond moeglich.

Datos tecnicos obtenidos con aceite 15W40 de 55 cSt (215 SUS) de viscosidad a 54°C (130°F). Los datos proporcionados son valores tipcos. Los valores exactos reales podrian tener una pequena variacion entre distintos motores.

110A 088

8.8 cu in / rev

PRESSURE (PSID)

	500	1000	1500	2000	2500	3000	3500
2	605 **52**	1210 **51**	1774 **50**	2324 **48**	2869 **41**		
4	590 **105**	1207 **103**	1804 **102**	2387 **99**	2975 **88**	3475 **73**	3929 **63**
6	574 **158**	1204 **156**	1833 **154**	2451 **152**	3080 **142**	3593 **126**	4141 **107**
8	553 **210**	1183 **208**	1817 **206**	2437 **203**	3067 **192**	3634 **178**	4154 **159**
10	532 **263**	1162 **261**	1801 **259**	2423 **253**	3054 **243**	3675 **235**	4167 **219**
12	509 **315**	1127 **312**	1762 **309**	2381 **303**	3006 **295**	3623 **284**	4179 **264**
14	487 **367**	1092 **363**	1722 **358**	2339 **353**	2958 **347**	3571 **335**	4192 **310**
16	468 **420**	1044 **415**	1659 **411**	2269 **403**	2914 **396**	3529 **384**	4143 **362**
18	448 **472**	997 **468**	1595 **463**	2199 **454**	2870 **444**	3487 **435**	4094 **416**
20	428 **525**	973 **520**	1551 **516**	2178 **507**	2832 **499**	3446 **486**	4051 **458**
22	408 **578**	949 **573**	1506 **569**	2158 **562**	2794 **555**	3405 **537**	4008 **499**
25	348 **656**	846 **651**	1423 **647**	2008 **636**	2610 **625**	3191 **608**	3809 **575**
30	279 **787**	740 **782**	1313 **776**	1821 **760**	2381 **744**	2921 **725**	3555 **697**

FLOW (GPM)

TORQUE (LB IN) 4051
SPEED (RPM) 458

144 cc / rev

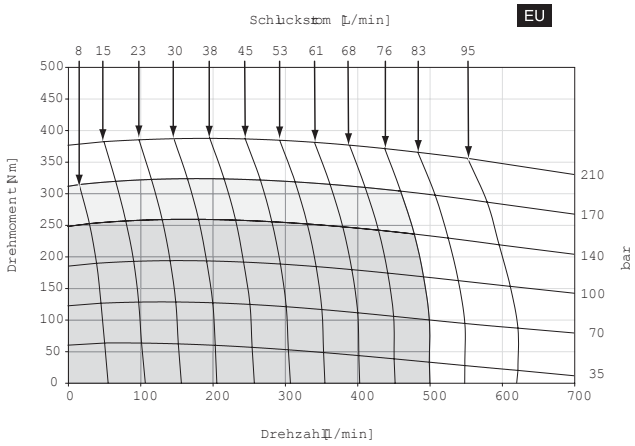

Cont. | Cont. with no side load / Int. with rated side load | Int.

Intermittent operation rating applies to 10% of every minute.

Fonctionnement interm. 10% max. de chaque minute d`utilisation.

Performance data based on tests using 15W40 oil with a viscosity of 55 cSt (215 SUS) at 54° C (130° F.) Performance data is typical. Actual data may vary slightly from one production motor to another.

Les donnees sur les performances sont basees sur des tests utilisant de l'huile 15W40 d'une viscosite de 55 cSt (215 SUS) a 54°C (130°F). Ces donnees correspondent a des situations typiques. Les donnees reelles peuvent varier legerement d'un moteur de production a l'autre.

Intermittierende Werte maximal 10% von jeder Betriebsminute.

Capacidad de funcionamiento intermitente valida para 10% por cada minuto.

Leistugsdaten sind gemessen mit SAE 15W40 bei einer Viskositaet von 43,1 Cst beo 54°C. Geringfuegige Abweichungen von den Katalogerten sond moeglich.

Datos tecnicos obtenidos con aceite 15W40 de 55 cSt (215 SUS) de viscosidad a 54°C (130°F). Los datos proporcionados son valores tipcos. Los valores exactos reales podrian tener una pequena variacion entre distintos motores.

110A 106

10.6 cu in / rev

PRESSURE (PSID)

	500	1000	1500	1750	2000	2250	2500	2750	3000	3250	3500
2	742 **44**	1501 **43**	2227 **42**	2569 **41**	2919 **40**	3264 **39**	3585 **37**	3897 **34**	4201 **31**	4537 **27**	4871 **23**
4	721 **87**	1485 **86**	2214 **85**	2576 **83**	2935 **82**	3302 **79**	3669 **76**	3990 **71**	4251 **66**	4599 **61**	4945 **57**
6	700 **131**	1468 **129**	2202 **128**	2583 **127**	2969 **126**	3359 **122**	3754 **118**	4036 **112**	4302 **106**	4660 **104**	5019 **102**
8	675 **174**	1442 **173**	2189 **171**	2569 **169**	2952 **166**	3340 **162**	3733 **158**	4071 **153**	4403 **149**	4715 **146**	5019 **144**
10	650 **218**	1417 **216**	2176 **214**	2554 **210**	2935 **207**	3321 **203**	3711 **198**	4106 **197**	4504 **196**	4770 **193**	5019 **190**
12	616 **262**	1383 **258**	2138 **255**	2509 **252**	2885 **248**	3264 **245**	3648 **241**	4025 **238**	4403 **235**	4715 **232**	5019 **229**
14	582 **305**	1350 **301**	2100 **296**	2465 **293**	2834 **290**	3207 **287**	3585 **284**	3943 **279**	4302 **275**	4660 **272**	5019 **268**
16	567 **349**	1278 **344**	2050 **340**	2410 **336**	2775 **331**	3155 **328**	3543 **324**	3903 **320**	4264 **316**	4626 **311**	4989 **307**
18	553 **392**	1206 **388**	1999 **384**	2354 **379**	2716 **373**	3103 **369**	3501 **365**	3862 **361**	4226 **357**	4592 **351**	4960 **345**
20	529 **436**	1168 **431**	1885 **427**	2270 **422**	2674 **416**	3060 **412**	3458 **408**	3822 **403**	4188 **399**		
22	506 **479**	1130 **475**	1771 **470**	2185 **465**	2632 **460**	3018 **455**	3416 **451**	3781 **446**	4150 **441**		
25	492 **545**	1110 **541**	1747 **537**	2145 **531**	2573 **526**	2951 **520**	3342 **515**	3700 **511**	4061 **507**		
30	470 **654**	1076 **651**	1708 **647**	2078 **641**	2474 **634**	2840 **628**	3219 **621**	3564 **615**	3913 **608**		

FLOW (GPM)

TORQUE (LB IN) 5019
SPEED (RPM) 229

174 cc / rev

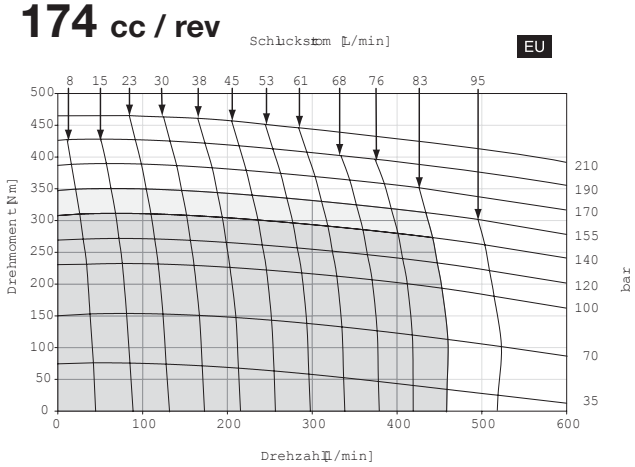

Cont. | Cont. with no side load / Int. with rated side load | Int.

Intermittent operation rating applies to 10% of every minute.

Fonctionnement interm. 10% max. de chaque minute d`utilisation.

Performance data based on tests using 15W40 oil with a viscosity of 55 cSt (215 SUS) at 54° C (130° F.) Performance data is typical. Actual data may vary slightly from one production motor to another.

Les donnees sur les performances sont basees sur des tests utilisant de l'huile 15W40 d'une viscosite de 55 cSt (215 SUS) a 54°C (130°F). Ces donnees correspondent a des situations typiques. Les donnees reelles peuvent varier legerement d'un moteur de production a l'autre.

Intermittierende Werte maximal 10% von jeder Betriebsminute.

Capacidad de funcionamiento intermitente valida para 10% por cada minuto.

Leistugsdaten sind gemessen mit SAE 15W40 bei einer Viskositaet von 43,1 Cst beo 54°C. Geringfuegige Abweichungen von den Katalogerten sond moeglich.

Datos tecnicos obtenidos con aceite 15W40 de 55 cSt (215 SUS) de viscosidad a 54°C (130°F). Los datos proporcionados son valores tipcos. Los valores exactos reales podrian tener una pequena variacion entre distintos motores.

110A 129

12.9 cu in / rev

PRESSURE (PSID)

	500	1000	1500	1750	2000	2250	2500	2750	3000	3250	3500
2	905 **36**	1827 **35**	2698 **34**	3112 **33**	3527 **32**	3943 **31**	4336 **29**	4729 **27**	5115 **25**	5522 **23**	5925 **20**
4	880 **72**	1807 **70**	2691 **69**	3128 **68**	3567 **66**	3999 **64**	4420 **62**	4805 **58**	5180 **55**	5599 **51**	6017 **48**
6	854 **107**	1786 **106**	2684 **105**	3144 **104**	3607 **103**	4055 **100**	4503 **97**	4881 **93**	5245 **89**	5677 **87**	6108 **85**
8	822 **143**	1755 **142**	2666 **140**	3122 **139**	3582 **137**	4035 **134**	4490 **130**	4912 **127**	5330 **123**	5723 **121**	6108 **118**
10	790 **179**	1725 **177**	2648 **175**	3101 **173**	3556 **171**	4015 **168**	4476 **164**	4944 **162**	5416 **160**	5769 **157**	6108 **154**
12	750 **215**	1683 **212**	2605 **210**	3060 **208**	3511 **205**	3965 **202**	4419 **199**	4867 **196**	5324 **193**	5718 **189**	6104 **186**
14	710 **251**	1642 **247**	2562 **244**	3020 **242**	3465 **240**	3914 **237**	4363 **234**	4790 **230**	5233 **226**		
16	685 **287**	1557 **283**	2501 **280**	2948 **277**	3394 **274**	3850 **271**	4309 **268**	4742 **263**	5183 **259**		
18	661 **322**	1472 **319**	2439 **316**	2876 **312**	3322 **307**	3785 **304**	4256 **301**	4695 **297**	5133 **293**		
20	628 **358**	1418 **355**	2294 **351**	2741 **347**	3205 **343**	3651 **339**	4105 **336**	4522 **331**			
22	596 **394**	1363 **390**	2150 **386**	2605 **382**	3089 **378**	3517 **374**	3954 **370**				
25	571 **448**	1322 **444**	2093 **440**	2532 **436**	2997 **431**	3427 **427**	3869 **422**				
30	531 **537**	1254 **533**	1999 **530**	2410 **524**	2843 **519**	3276 **514**					

FLOW (GPM)

TORQUE (LB IN) 6108
SPEED (RPM) 154

211 cc / rev

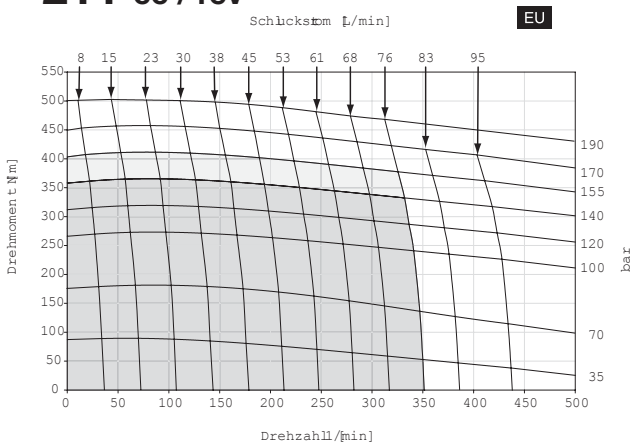

Cont. | Cont. with no side load / Int. with rated side load | Int.

Intermittent operation rating applies to 10% of every minute.

Fonctionnement interm. 10% max. de chaque minute d`utilisation.

Performance data based on tests using 15W40 oil with a viscosity of 55 cSt (215 SUS) at 54° C (130° F.) Performance data is typical. Actual data may vary slightly from one production motor to another.

Les donnees sur les performances sont basees sur des tests utilisant de l'huile 15W40 d'une viscosite de 55 cSt (215 SUS) a 54°C (130°F). Ces donnees correspondent a des situations typiques. Les donnees reelles peuvent varier legerement d'un moteur de production a l'autre.

Intermittierende Werte maximal 10% von jeder Betriebsminute.

Capacidad de funcionamiento intermitente valida para 10% por cada minuto.

Leistugsdaten sind gemessen mit SAE 15W40 bei einer Viskositaet von 43,1 Cst beo 54°C. Geringfuegige Abweichungen von den Katalogerten sond moeglich.

Datos tecnicos obtenidos con aceite 15W40 de 55 cSt (215 SUS) de viscosidad a 54°C (130°F). Los datos proporcionados son valores tipcos. Los valores exactos reales podrian tener una pequena variacion entre distintos motores.

110A 164

16.4 cu in / rev

PRESSURE (PSID)

	500	1000	1500	1750	2000	2250	2500	2750	3000	3250
2	1155 **28**	2323 **27**	3406 **26**	3928 **25**	4437 **24**	4954 **23**	5462 **22**	5986 **21**	6507 **20**	7020 **19**
4	1122 **56**	2297 **55**	3414 **54**	3963 **53**	4505 **51**	5023 **49**	5530 **48**	6065 **46**	6597 **44**	7124 **43**
6	1088 **85**	2271 **84**	3422 **83**	3997 **82**	4573 **80**	5092 **79**	5599 **77**	6144 **74**	6687 **72**	7227 **70**
8	1047 **113**	2232 **112**	3394 **110**	3963 **109**	4531 **108**	5071 **106**	5605 **104**	6164 **101**	6722 **98**	7247 **95**
10	1005 **141**	2193 **139**	3367 **138**	3928 **137**	4489 **135**	5051 **133**	5612 **131**	6184 **128**	6758 **125**	
12	955 **169**	2061 **167**	3318 **166**	3888 **164**	4463 **163**	5021 **161**	5579 **158**	6141 **155**		
14	904 **197**	2086 **195**	3269 **193**	3878 **192**	4437 **191**	4998 **188**	5547 **185**	6072 **181**		
16	861 **225**	1925 **223**	3191 **221**	3763 **219**	4346 **217**	4908 **215**	5475 **212**			
18	818 **254**	1879 **251**	3113 **248**	3677 **246**	4255 **243**	4827 **241**				
20	783 **282**	1853 **279**	3015 **276**	3577 **273**	4155 **270**	4733 **268**				
22	718 **310**	1710 **307**	2721 **304**	3209 **301**	3706 **297**	4170 **294**				
25	672 **352**	1626 **349**	2596 **345**	3068 **342**	3550 **338**	4038 **335**				
30	596 **423**	1488 **418**	2388 **414**	2832 **410**	3289 **406**	3817 **401**				

FLOW (GPM)

TORQUE (LB IN) 6758
SPEED (RPM) 125

269 cc / rev

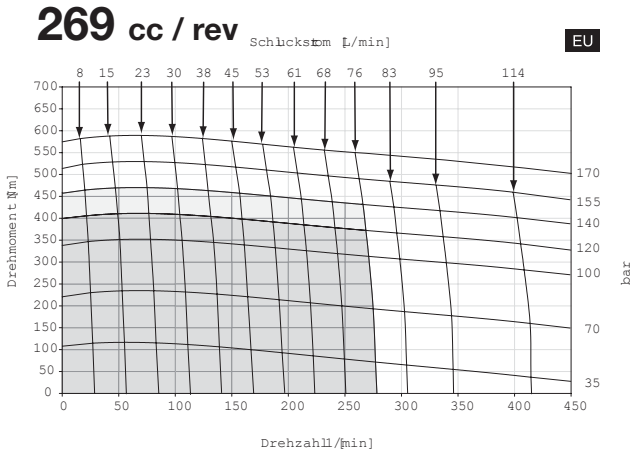

Cont. | Cont. with no side load / Int. with rated side load | Int.

Intermittent operation rating applies to 10% of every minute.

Fonctionnement interm. 10% max. de chaque minute d`utilisation.

Performance data based on tests using 15W40 oil with a viscosity of 55 cSt (215 SUS) at 54° C (130° F.) Performance data is typical. Actual data may vary slightly from one production motor to another.

Les donnees sur les performances sont basees sur des tests utilisant de l'huile 15W40 d'une viscosite de 55 cSt (215 SUS) a 54°C (130°F). Ces donnees correspondent a des situations typiques. Les donnees reelles peuvent varier legerement d'un moteur de production a l'autre.

Intermittierende Werte maximal 10% von jeder Betriebsminute.

Capacidad de funcionamiento intermitente valida para 10% por cada minuto.

Leistugsdaten sind gemessen mit SAE 15W40 bei einer Viskositaet von 43,1 Cst beo 54°C. Geringfuegige Abweichungen von den Katalogerten sond moeglich.

Datos tecnicos obtenidos con aceite 15W40 de 55 cSt (215 SUS) de viscosidad a 54°C (130°F). Los datos proporcionados son valores tipcos. Los valores exactos reales podrian tener una pequena variacion entre distintos motores.

110A 189

18.9 cu in / rev

PRESSURE (PSID)

FLOW (GPM)	500	1000	1250	1500	1750	2250	2500
2	1285 **23**	2619 **22**	3224 **21**	3838 **20**	4442 **18**	5548 **16**	6131 **13**
4	1264 **47**	2589 **46**	3250 **45**	3859 **44**	4486 **42**	5668 **40**	6282 **38**
6	1228 **73**	2559 **72**	3240 **71**	3865 **70**	4513 **69**	5765 **67**	6409 **66**
8	1171 **97**	2509 **96**	3176 **95**	3829 **94**	4503 **93**	5771 **90**	6439 **89**
10	1114 **121**	2449 **120**	3111 **119**	3793 **118**	4476 **117**	5777 **114**	6468 **112**
12	1065 **145**	2391 **144**	3061 **143**	3750 **142**	4439 **141**	5747 **137**	
14	1016 **169**	2333 **168**	3011 **167**	3707 **166**	4402 **165**	5717 **161**	
16	975 **200**	2257 **199**	2938 **198**	3636 **197**	4326 **195**	5645 **185**	
18	966 **232**	1988 **230**	2506 **228**	3037 **227**	3563 **226**		
20	941 **263**	1815 **261**	2253 **259**	2702 **258**	3143 **256**		
22	916 **295**	1643 **293**	2001 **290**	2367 **288**	2724 **286**		
25	879 **342**	1384 **339**	1622 **335**	1865 **334**	2094 **331**		
30	816 **420**	952 **417**	990 **412**	1027 **410**	1045 **407**		

TORQUE (LB IN) 2724
SPEED (RPM) 286

310 cc / rev

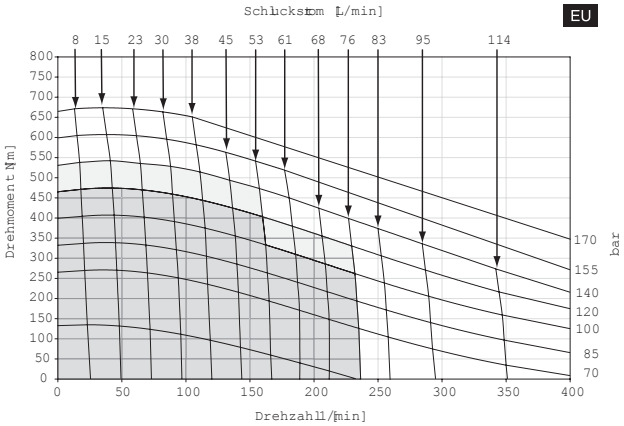

Cont. | Cont. with no side load / Int. with rated side load | Int.

Intermittent operation rating applies to 10% of every minute.

Fonctionnement interm. 10% max. de chaque minute d`utilisation.

Performance data based on tests using 15W40 oil with a viscosity of 55 cSt (215 SUS) at 54° C (130° F.) Performance data is typical. Actual data may vary slightly from one production motor to another.

Les donnees sur les performances sont basees sur des tests utilisant de l'huile 15W40 d'une viscosite de 55 cSt (215 SUS) a 54°C (130°F). Ces donnees correspondent a des situations typiques. Les donnees reelles peuvent varier legerement d'un moteur de production a l'autre.

Intermittierende Werte maximal 10% von jeder Betriebsminute.

Capacidad de funcionamiento intermitente valida para 10% por cada minuto.

Leistugsdaten sind gemessen mit SAE 15W40 bei einer Viskositaet von 43,1 Cst beo 54°C. Geringfuegige Abweichungen von den Katalogerten sond moeglich.

Datos tecnicos obtenidos con aceite 15W40 de 55 cSt (215 SUS) de viscosidad a 54°C (130°F). Los datos proporcionados son valores tipcos. Los valores exactos reales podrian tener una pequena variacion entre distintos motores.

110A 241

24.1 cu in / rev

PRESSURE (PSID)

	500	1000	1250	1500	1750	2250
2	1515 **15**	3184 **14**	3884 **12**	4660 **11**	5427 **10**	6645 **9**
4	1534 **35**	3145 **34**	4027 **32**	4718 **30**	5504 **29**	6904 **28**
6	1496 **56**	3107 **55**	4027 **54**	4718 **53**	5504 **52**	7077 **51**
8	1400 **74**	3030 **73**	3884 **72**	4660 **70**	5571 **68**	7163 **66**
10	1304 **93**	2915 **92**	3740 **91**	4603 **90**	5571 **89**	
12	1266 **112**	2851 **112**	3708 **110**	4584 **109**	5549 **107**	
14	1227 **130**	2787 **129**	3676 **128**	4564 **127**	5527 **126**	
16	1189 **149**	2723 **148**	3644 **147**	4545 **146**	5504 **144**	
18	1170 **167**	2685 **166**	3596 **165**	4488 **164**	5437 **162**	
20	1151 **184**	2685 **183**	3596 **182**	4430 **180**	5370 **178**	
22	1112 **205**	2608 **204**	3452 **203**	4258 **202**	5169 **200**	
25	1055 **235**	2455 **232**	3260 **231**	4085 **230**	4900 **228**	
30	959 **288**	2225 **285**	2925 **282**	3682 **279**	4363 **273**	

FLOW (GPM)

TORQUE (LB IN) 5169
SPEED (RPM) 200

395 cc / rev

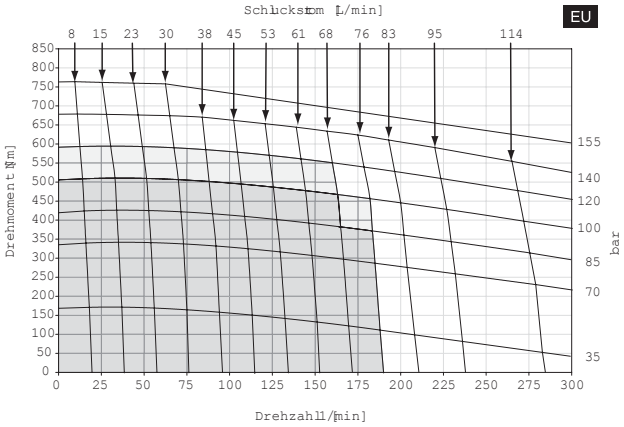

■ Cont. ■ Cont. with no side load / Int. with rated side load □ Int.

Intermittent operation rating applies to 10% of every minute.

Fonctionnement interm. 10% max. de chaque minute d`utilisation.

Performance data based on tests using 15W40 oil with a viscosity of 55 cSt (215 SUS) at 54° C (130° F.) Performance data is typical. Actual data may vary slightly from one production motor to another.

Les donnees sur les performances sont basees sur des tests utilisant de l'huile 15W40 d'une viscosite de 55 cSt (215 SUS) a 54°C (130°F). Ces donnees correspondent a des situations typiques. Les donnees reelles peuvent varier legerement d'un moteur de production a l'autre.

Intermittierende Werte maximal 10% von jeder Betriebsminute.

Capacidad de funcionamiento intermitente valida para 10% por cada minuto.

Leistugsdaten sind gemessen mit SAE 15W40 bei einer Viskositaet von 43,1 Cst beo 54°C. Geringfuegige Abweichungen von den Katalogerten sond moeglich.

Datos tecnicos obtenidos con aceite 15W40 de 55 cSt (215 SUS) de viscosidad a 54°C (130°F). Los datos proporcionados son valores tipcos. Los valores exactos reales podrian tener una pequena variacion entre distintos motores.

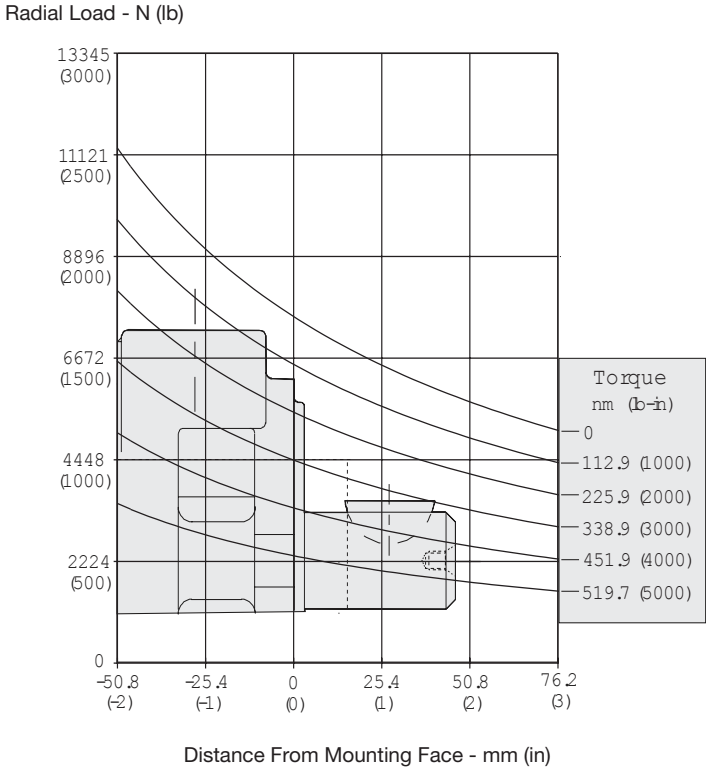

The allowable side load curve is based on L_{10} bushing life of 3 x 10^6 revolutions @ 100 RPM.
Die zulassige radiale Wellenbelastung bezieht sich auf die Lager-Lebensdauer 3 x 10^6 Umdrehungen.
L'effort radial admissible sur l'arbre depend a une duree de vie 3 x 10^6 de rotation.
La curva de carga lateral admisible se basa en vida util de cojinete de 3 x 10 revoluciones.

Equation to Calculate the Expected Radial Bearing Life
Gelichung zur Ermittlung der Lagerlebensdauer

Equation to calculate the dynamic bearing life for a given load:
Bestimmung der erlaubten radialen Wellenbelastung mit vorgegebener Last

Use F_a, F_b and S in equation to determine hours of L_{10} bearing life.
Die Lebensdauer in Stunden ergibt sich durch einsetzen von F_a, F_b, und S in die nachstehende Formel.

$$L = \frac{3.0 \times 10^6}{60 \times S} \left\{\frac{F_a}{F_b}\right\}^{3.33}$$

Where / Mit:

S = Shaft Speed RPM / Abtriebswellendrehzahl in min^{-1}
L = Life In Hours / Lebensdauer in Stunden
F_a = Allowable side load defined by above curve at a distance from mounting flange. / Erlaubte radiale Wellenbelastung als Function der Laenge
F_b = Application side load. / Anwendungsseitige Wellenbelastung

Note: Calculations are based on L_{10} bearing life per ISO 281.
Auslegung basiert auf einer L_{10} Lenbendauer nach ISO 281

Code: AM

SAE A 2-Bolt, Manifold

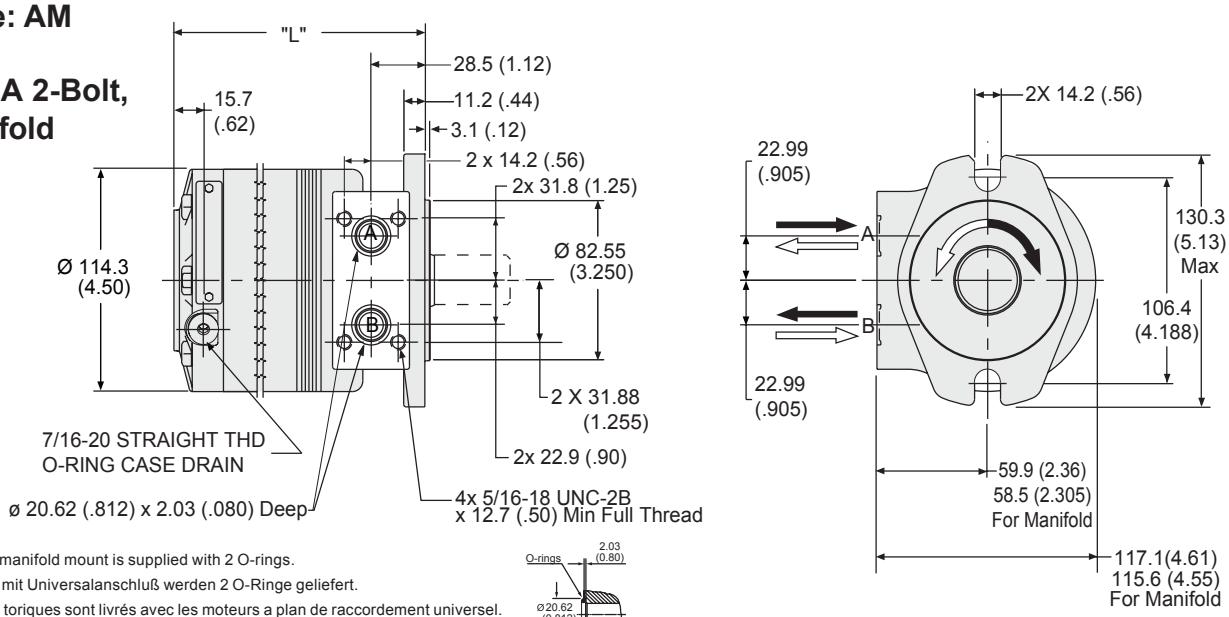

Motor with manifold mount is supplied with 2 O-rings.
Zum Motor mit Universalanschluß werden 2 O-Ringe geliefert.
Deux joints toriques sont livrés avec les moteurs a plan de raccordement universel.
Il blocchetto connessioni é corredato da 2 OR.

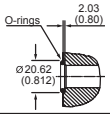

Code AM		036	054	071	088	106	129	164	189	241
Weight/Gewicht	**kg**	**7.0**	**7.4**	**7.7**	**8.0**	**8.4**	**8.7**	**9.4**	**9.8**	**10.8**
Poids/Peso	(lb)	(15.4)	(16.2)	(16.9)	(17.5)	(18.4)	(19.1)	(20.6)	(21.6)	(23.7)
Length	**"L" mm**	**112**	**117**	**121**	**127**	**131**	**138**	**147**	**154**	**169**
	"L" (in)	(4.41)	(4.60)	(4.78)	(4.98)	(5.17)	(5.42)	(5.80)	(6.07)	(6.64)

Code: AS

SAE A 2-Bolt, 7/8"-14 SAE O-Ring

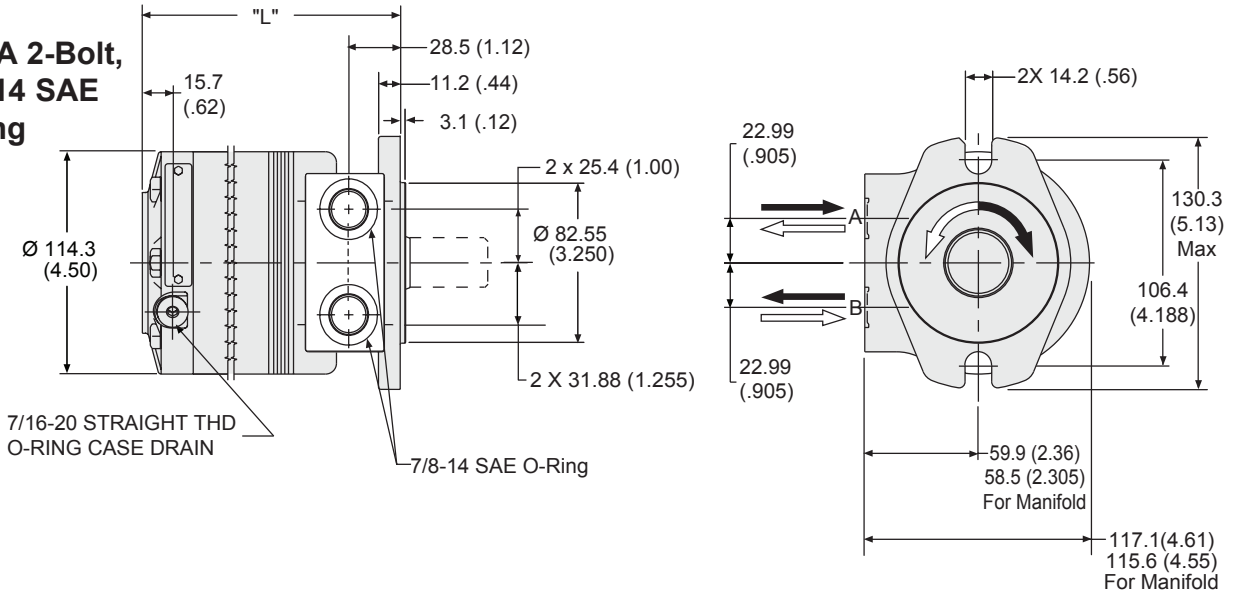

Code AS		036	054	071	088	106	129	164	189	241
Weight/Gewicht	**kg**	**7.0**	**7.4**	**7.7**	**8.0**	**8.4**	**8.7**	**9.4**	**9.8**	**10.8**
Poids/Peso	(lb)	(15.4)	(16.2)	(16.9)	(17.5)	(18.4)	(19.1)	(20.6)	(21.6)	(23.7)
Length	**"L" mm**	**112**	**117**	**121**	**127**	**131**	**138**	**147**	**154**	**169**
	"L" (in)	(4.41)	(4.60)	(4.78)	(4.98)	(5.17)	(5.42)	(5.80)	(6.07)	(6.64)

English equivalents for metric specifications are shown in ( ).

020 110A.indd, js

Parker Hannifin Corporation
Hydraulic Pump/Motor Division
Greeneville, Tennessee, USA

Code: AP

SAE A 2-Bolt, 1/2" BSPP

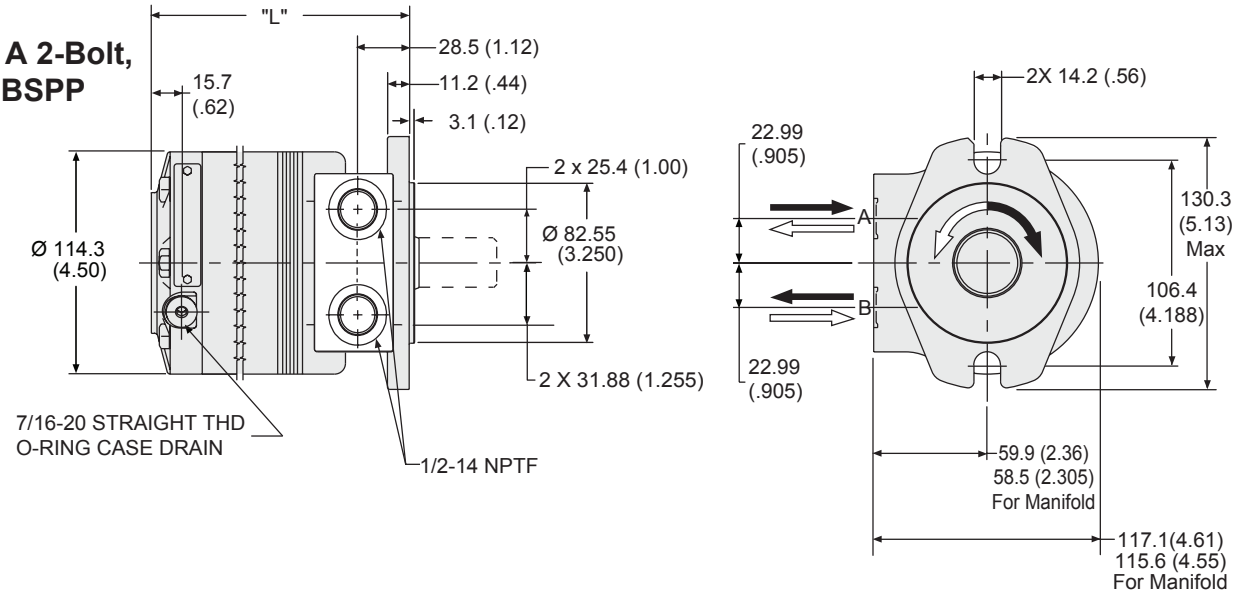

Code AT		036	054	071	088	106	129	164	189	241
Weight/Gewicht	**kg**	**7.0**	**7.4**	**7.7**	**8.0**	**8.4**	**8.7**	**9.4**	**9.8**	**10.8**
Poids/Peso	(lb)	(15.4)	(16.2)	(16.9)	(17.5)	(18.4)	(19.1)	(20.6)	(21.6)	(23.7)
Length	**"L" mm**	**112**	**117**	**121**	**127**	**131**	**138**	**147**	**154**	**169**
	"L" (in)	(4.41)	(4.60)	(4.78)	(4.98)	(5.17)	(5.42)	(5.80)	(6.07)	(6.64)

Code: BM

SAE B 2-Bolt, Manifold

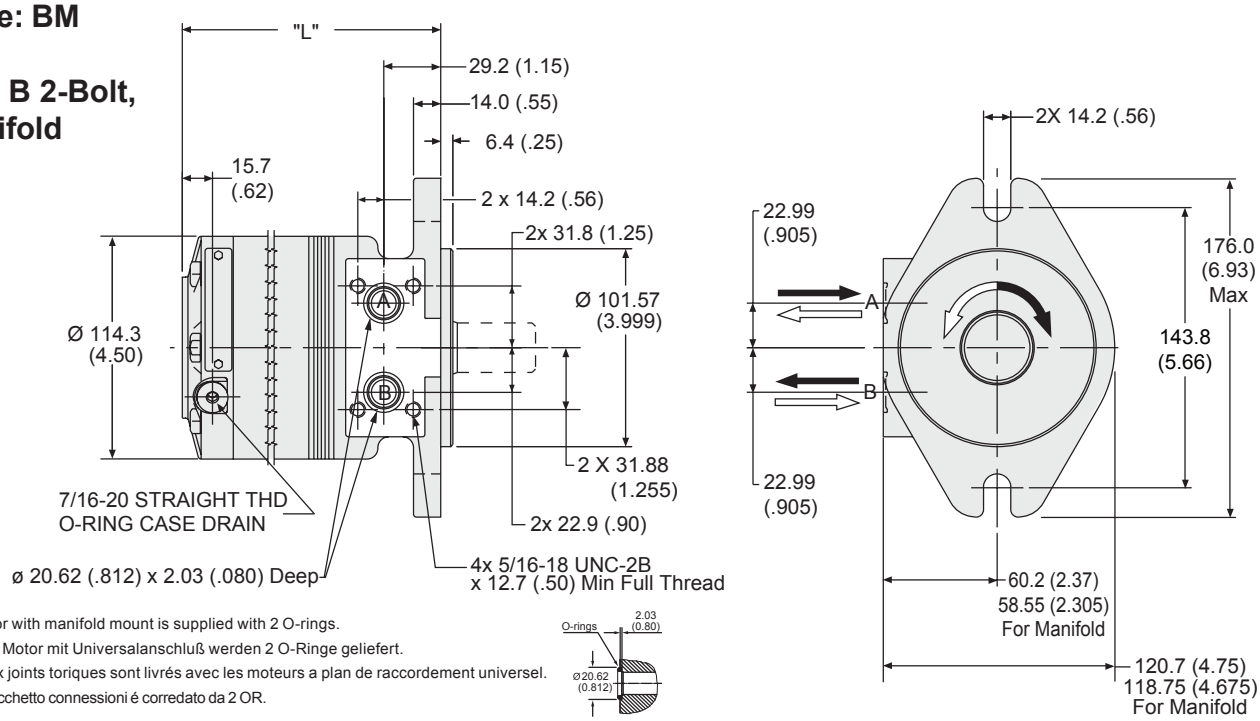

Motor with manifold mount is supplied with 2 O-rings.
Zum Motor mit Universalanschluß werden 2 O-Ringe geliefert.
Deux joints toriques sont livrés avec les moteurs a plan de raccordement universel.
Il blocchetto connessioni é corredato da 2 OR.

Code BM		036	054	071	088	106	129	164	189	241
Weight/Gewicht	**kg**	**7.0**	**7.4**	**7.7**	**8.0**	**8.4**	**8.7**	**9.4**	**9.8**	**10.8**
Poids/Peso	(lb)	(15.4)	(16.2)	(16.9)	(17.5)	(18.4)	(19.1)	(20.6)	(21.6)	(23.7)
Length	**"L" mm**	**112**	**117**	**121**	**127**	**131**	**138**	**147**	**154**	**169**
	"L" (in)	(4.41)	(4.60)	(4.78)	(4.98)	(5.17)	(5.42)	(5.80)	(6.07)	(6.64)

English equivalents for metric specifications are shown in ( ).

020 110A.indd, js

Parker Hannifin Corporation
Hydraulic Pump/Motor Division
Greeneville, Tennessee, USA

Code: BS

SAE B 2-Bolt, 7/8"-14 SAE O-Ring

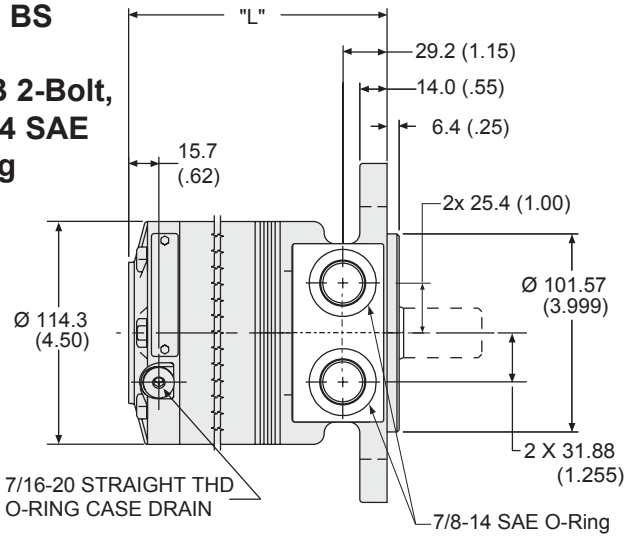

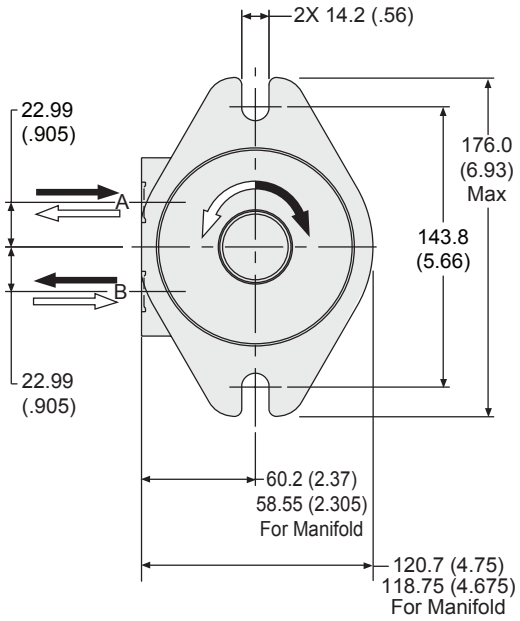

Motor with manifold mount is supplied with 2 O-rings.
Zum Motor mit Universalanschluß werden 2 O-Ringe geliefert.
Deux joints toriques sont livrés avec les moteurs a plan de raccordement universel.
Il blocchetto connessioni é corredato da 2 OR.

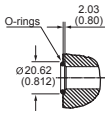

Code BS		036	054	071	088	106	129	164	189	241
Weight/Gewicht	**kg**	**7.0**	**7.4**	**7.7**	**8.0**	**8.4**	**8.7**	**9.4**	**9.8**	**10.8**
Poids/Peso	(lb)	(15.4)	(16.2)	(16.9)	(17.5)	(18.4)	(19.1)	(20.6)	(21.6)	(23.7)
Length	**"L" mm**	**112**	**117**	**121**	**127**	**131**	**138**	**147**	**154**	**169**
	"L" (in)	(4.41)	(4.60)	(4.78)	(4.98)	(5.17)	(5.42)	(5.80)	(6.07)	(6.64)

English equivalents for metric specifications are shown in ( ).

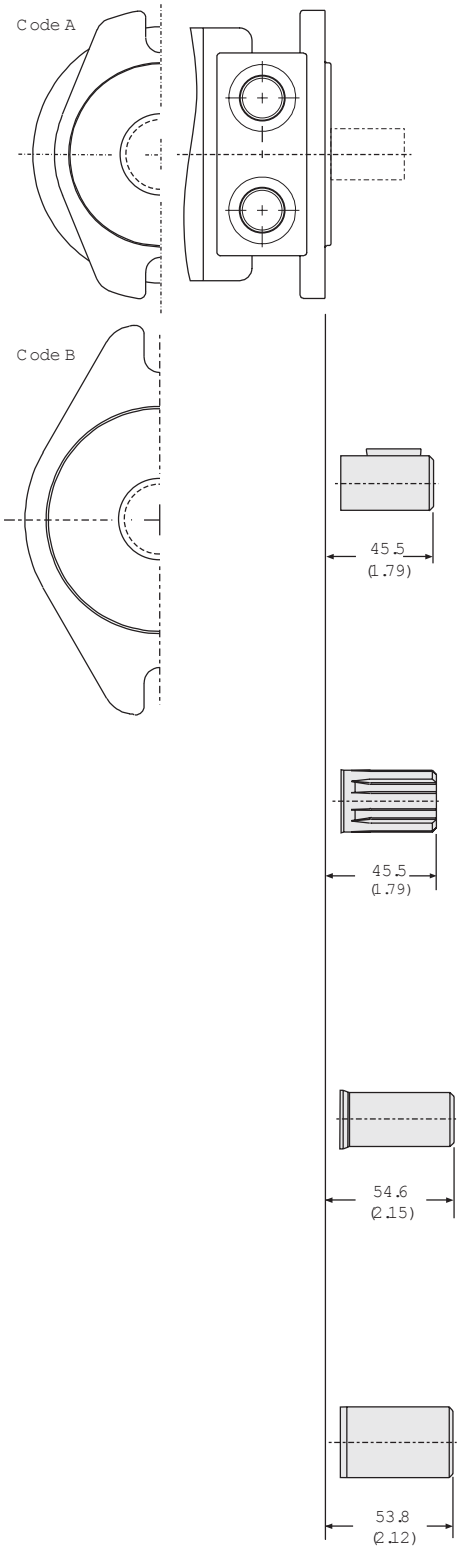

Code: 0

1" Keyed

Code: 1

1" 6B Spline

Code: 2

25mm Keyed

Code: 3

1-1/4" Keyed

English equivalents for metric specifications are shown in ( ).

Code: 0

1” Keyed

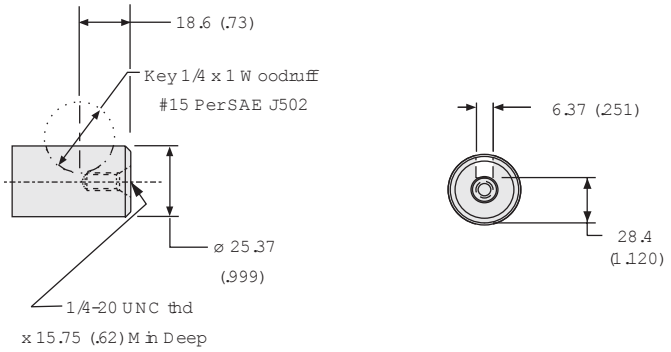

Code: 1

1" 6B Spline

Code: 2

25mm Keyed

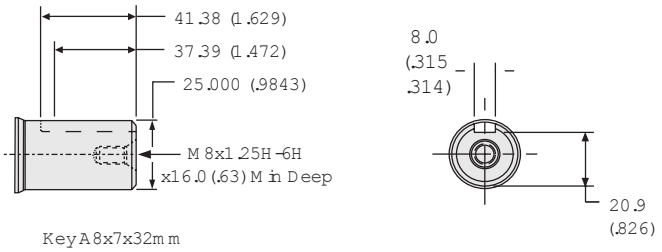

Code: 3

1-1/4" Keyed

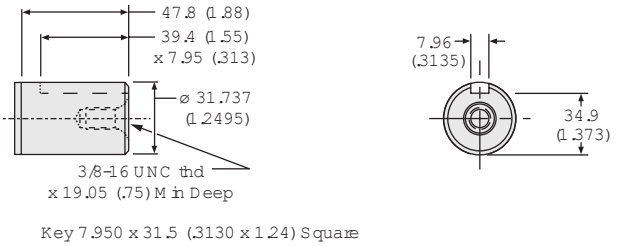

English equivalents for metric specifications are shown in ( ).

020 110A.indd, js

Parker Hannifin Corporation
Hydraulic Pump/Motor Division
Greeneville, Tennessee, USA

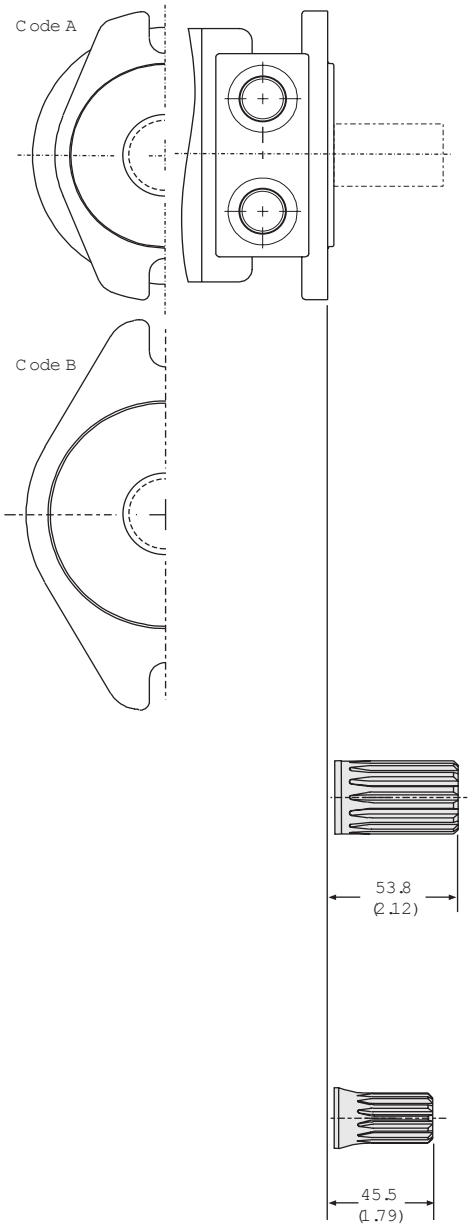

Code: 5

1-1/4"-14 Tooth Spline

Code: 6

7/8"-13 Tooth Spline

English equivalents for metric specifications are shown in ( ).

Code: 5

1-1/4"-14 Tooth Spline

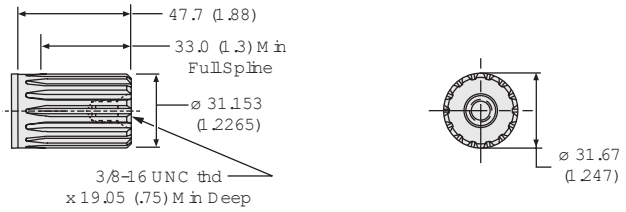

Code: 6

7/8"-13 Tooth Spline

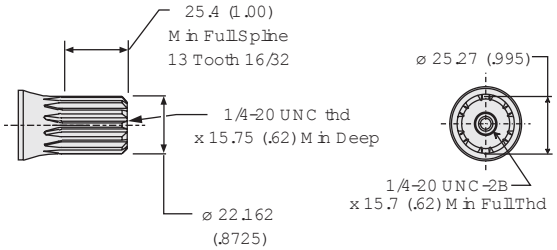

English equivalents for metric specifications are shown in ( ).

6 Displacements	**Series**		(3.6 – 12.9 in³/rev)
6 Schluckvolumen			**59…211 cm³/rev**
6 Cylindrée	**Parallel**		(7.2 – 25.8 in³/rev)
6 Despazamientos			**118…423 cm³/rev**
		Cont	**Int**
Maximum Pressure	**Series**	(2500 psid)	(3000 psid)
Eingangsdruck		**…170 bar**	**…210 bar**
Pression entrée	**Parallel**	(2500 psid)	(3000 psid)
Pressione Maxima		**…170 bar**	**…210 bar**
Maximum Oil Flow	**Series**		(20 gpm)
Schluckstrom			**…76 lpm**
Débit d'huile	**Parallel**		(30 gpm)
Caudal Maximo de Aceite			**…114 lpm**
Maximum Speed	**Series**		**890 rpm**
Drehzahl	**Parallel**		**782 rpm**
Vitesse de rotation			
Velocidad Maxima			
		Cont	**Int**
Maximum Torque	**Series**	(3816 lb in)	(4694 lb in)
Max Drehmoment		**…431 Nm**	**…530 Nm**
Couple	**Parallel**	(6648 lb in)	(7463 lb in)
Torque Maximo		**…751 Nm**	**…843 Nm**
Maximum Side Load at Key	**Series**		(700 lb) **… 3114 N**
Seitenlast			
Charges latèrales			
Carga Maxima Lateral			

High Efficiency, High Flow Two-Speed Motor

Parker's patented two-speed motor utilizes two separate IGR™ power elements on a common shaft. An integral selector valve shifts between high torque, low speed (parallel) operation and high speed, low torque (series) mode in a ration of 2:1. The use of two power elements eliminates the deficiencies of traditional, single power element designs. In the high torque mode, the motor delivers twice the torque and half the speed that it does in the high speed mode. The selector valve can be open or closed center and may be actuated by an external pilot or optional solenoid valve. The open center selector valve can be shifted "on the fly" while the motor shaft is rotating under load. The selector valve is spring loaded to return to its pilot-pressure-off position. Normal mode of operation is field changeable and can be selected as series or parallel. Pilot pressure must be 300 psi higher than motor case or outlet pressure and may be as high as typical hydraulic system operating pressure.

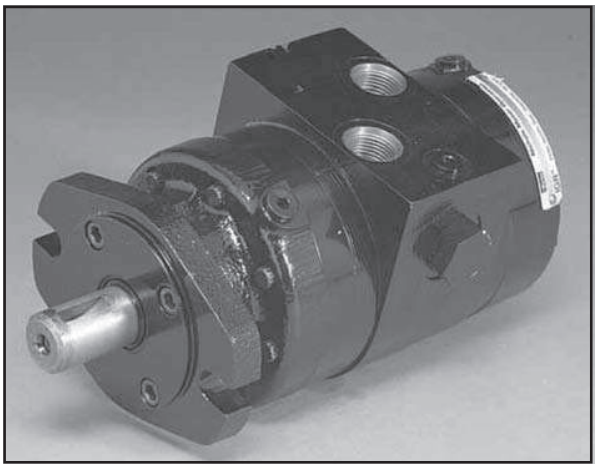

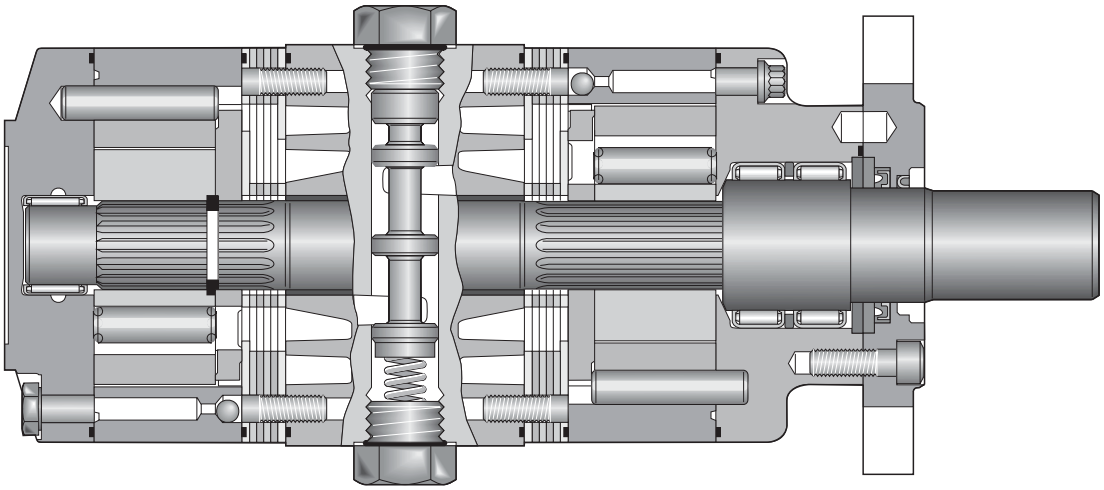

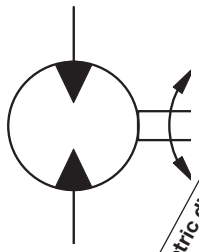

Motor Series 700	Geometric displacement Geom. Schluckvolumen Cylindrée Cilindrata	Max. speed @ Max. intermittent flow Max. Drehzahl Intermittierender Betrieb: Vitesse de rotation maxi Velocidad maxima a caudal intermitente maximo	Max. oil flow Max. Schluckstrom Débit d'huile maxi Portata max		Max. differential pressure Max. Druckgefälle Chute de pression maxi Presion diferencial maxima		Max. supply pressure Max. Eingangsdruck Pression maxi entrée Presion maxima de alimentacion	Max. torque Max. Drehmoment Couple maxi Torque Maximo		Max. performance Max. Leistungabgabe Puissance de sortie maxi Maximo rendimento
	cm³/rev in³/rev	***int*** rev/min	***cont / int**** **l/min** g/min		***cont / int**** **bar** psid		***max*** **bar** psig	***cont / int**** **Nm** lb-in		***max*** **KW** HP
072 Series	**59** 3.6	890	**45.4** 12	**53.0** 14	**170** 2500	**210** 3000	**276** 4000	**129** 1146	**154** 1366	**8.6** 11.5
072 Parallel	**118** 7.2	782	**83.3** 22	**94.6** 25	**170** 2500	**210** 3000	**276** 4000	**264** 2338	**309** 2739	**15.5** 20.8
108 Series	**88** 5.4	843	**60.6** 16	**68.1** 18	**170** 2500	**210** 3000	**276** 4000	**197** 1743	**236** 2088	**12.4** 16.6
108 Parallel	**177** 10.8	656	**94.6** 25	**113.5** 30	**170** 2500	**210** 3000	**276** 4000	**527** 4666	**624** 5525	**26.9** 36.1
142 Series	**116** 7.1	695	**75.7** 20	**83.3** 22	**170** 2500	**210** 3000	**276** 4000	**260** 2306	**313** 2769	**12.8** 17.2
142 Parallel	**233** 14.2	481	**113.5** 30	**113.5** 30	**170** 2500	**210** 3000	**276** 4000	**518** 4592	**616** 5456	**21.8** 29.2
176 Series	**144** 8.8	688	**75.7** 20	**94.6** 25	**170** 2500	**210** 3000	**276** 4000	**325** 2818	**392** 3472	**14.2** 19.1
176 Parallel	**288** 17.6	419	**113.5** 30	**113.5** 30	**170** 2500	**210** 3000	**276** 4000	**644** 5707	**709** 6283	**23.9** 32.1
212 Series	**174** 10.6	580	**75.7** 20	**113.5** 30	**155** 2250	**210** 3000	**276** 4000	**353** 3125	**475** 4205	**13.0** 17.4
212 Parallel	**347** 21.2	352	**113.5** 30	**113.5** 30	**155** 2250	**210** 3000	**276** 4000	**696** 6167	**774** 6860	**21.2** 29.4
258 Series	**211** 12.9	440	**75.7** 20	**113.5** 30	**155** 2250	**210** 3000	**276** 4000	**431** 3816	**531** 4699	**12.3** 16.5
258 Parallel	**423** 25.8	268	**113.5** 30	**113.5** 30	**137.9** 2000	**155.1** 2250	**276** 4000	**751** 6648	**843** 7463	**18.0** 24.2

Performance data based on tests using 15W40 oil with a viscosity of 55 cSt (215 SUS) at 54° C (130° F.) Performance data is typical. Actual data may vary slightly from one production motor to another.

Les donnees sur les performances sont basees sur des tests utilisant de l'huile 15W40 d'une viscosite de 55 cSt (215 SUS) a 54°C (130°F). Ces donnees correspondent a des situations typiques. Les donnees reelles peuvent varier legerement d'un moteur de production a l'autre.

Leistugsdaten sind gemessen mit SAE 15W40 bei einer Viskositaet von 43,1 Cst beo 54°C. Geringfuegige Abweichungen von den Katalogerten sond moeglich.

Datos tecnicos obtenidos con aceite 15W40 de 55 cSt (215 SUS) de viscosidad a 54°C (130°F). Los datos proporcionados son valores tipcos. Los valores exactos reales podrian tener una pequena variacion entre distintos motores.

***** Intermittent operation rating applies to 10% of every minute.
Intermittierende Werte maximal 10% von jeder Betriebsminute.
Fonctionnement interm. 10% max. de chaque minute d`utilisation.
Capacidad de funcionamiento intermitente valida para 10% por cada minuto.

7	0	X	-	XXX	-	X	X	-	X	-	X	X	X	-	X
Series	Series	Shaft Welle Arbre Ejes		Displacement Schluckvolumen Cylindrée Desplazamiento		Mounting Gehäuse Carter Montaje	Ports Anschluß Plan de raccordement Lumbreras		Thru-Shaft durchgehende Welle arbre traversant Eje pasante		Spool Actuation Spulenbetätigung Actionnement de la bobine Actuado por bobina	Normal Center Position [1] Normale Mittenposition Position centrale normale Posición central normal	Normal Mode of Operation [4] Normaler Betriebsmodus Mode opératoire normal Modo normal de operación		Paint Anstrich Peinture Pintura

Code	
0	1" Keyed 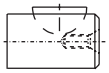
3	1-1/4" Keyed 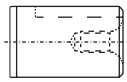
5	1-1/4"-14 Tooth Spline 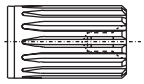

Code	cm³/U cm³/tr cm³/giro		in³/rev
072	60 119	/ /	3.6 Series 7.2 Parallel
108	88 176	/ /	5.4 Series 10.8 Parallel
142	116 232	/ /	7.1 Series 14.2 Parallel
176	144 289	/ /	8.8 Series 17.6 Parallel
212	174 348	/ /	10.6 Series 21.2 Parallel
258	211 423	/ /	12.9 Series 25.8 Parallel

Code	
AM	SAE A 2-Bolt,Manifold 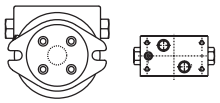
AS	SAE A 2-Bolt, 7/8"-14 SAE 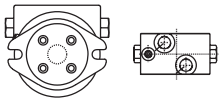
BM	SAE B 2-Bolt, Manifold 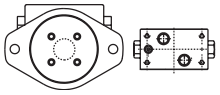
BS	SAE B 2-Bolt, 7/8"-14 SAE 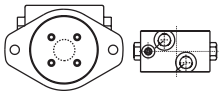

Code	
PCL	Remotely Piloted, Closed, Parallel 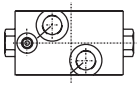
POL	Remotely Piloted, Open, Parallel 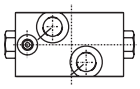
SOL[1]	Solenoid Actuated with Manual Override, Open, Parallel 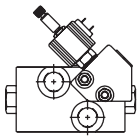

[1] Standard Solenoid is 12V DC with 1/4" Spade Connections.
Standardausführung ist ein 12-V-Gleichstrom-Solenoid mit 1/4-Zoll-Gabelschuhanschlüssen.
Le solénoïde standardisé est du type 12 Vcc avec cosses à fourche de 1/4".
La solenoide estándar es para 12 VCC, con conectores tipo bayoneta de 1/4".

Code	
0	No Thru Shaft
1	Thru Shaft
E	Encoder

Code	
Omit	No Paint
F	Black Paint Schwarz lackiert

Consult factory for other available options, configurations ordering codes and lead times.

072 Series

3.6 cu in / rev

PRESSURE (PSID)

FLOW (GPM)	500	1000	1500	2000	2500	3000	3500
2	242 **128**	481 **127**	718 **119**	941 **107**	1143 **88**	1313 **70**	
4	240 **257**	476 **256**	695 **255**	961 **239**	1193 **219**	1399 **194**	1574 **157**
6	217 **385**	449 **384**	697 **382**	947 **378**	1189 **357**	1420 **329**	1606 **289**
8	187 **513**	421 **512**	670 **513**	910 **511**	1155 **492**	1384 **467**	1610 **418**
10	139 **642**	372 **640**	618 **641**	867 **638**	1116 **628**	1361 **599**	1534 **553**
12	74 **770**	307 **770**	553 **768**	818 **768**	1056 **756**	1275 **708**	1496 **671**
14		240 **898**	486 **898**	754 **897**	994 **882**	1191 **847**	1448 **798**

TORQUE (LB IN) 994
SPEED (RPM) 882

59 cc / rev

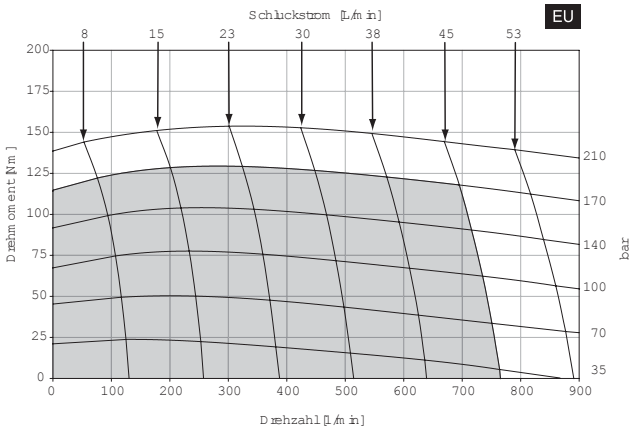

Cont. Int.

Intermittent operation rating applies to 10% of every minute.

Fonctionnement interm. 10% max. de chaque minute d`utilisation.

Performance data based on tests using 15W40 oil with a viscosity of 55 cSt (215 SUS) at 54° C (130° F.) Performance data is typical. Actual data may vary slightly from one production motor to another.

Les donnees sur les performances sont basees sur des tests utilisant de l'huile 15W40 d'une viscosite de 55 cSt (215 SUS) a 54°C (130°F). Ces donnees correspondent a des situations typiques. Les donnees reelles peuvent varier legerement d'un moteur de production a l'autre.

Intermittierende Werte maximal 10% von jeder Betriebsminute.

Capacidad de funcionamiento intermitente valida para 10% por cada minuto.

Leistugsdaten sind gemessen mit SAE 15W40 bei einer Viskositaet von 43,1 Cst beo 54°C. Geringfuegige Abweichungen von den Katalogerten sond moeglich.

Datos tecnicos obtenidos con aceite 15W40 de 55 cSt (215 SUS) de viscosidad a 54°C (130°F). Los datos proporcionados son valores tipcos. Los valores exactos reales podrian tener una pequena variacion entre distintos motores.

072 Parallel

7.2 cu in / rev

PRESSURE (PSID)

FLOW (GPM)	500	1000	1500	2000	2500	3000	3500
2	441 **63**	889 **59**	1272 **48**	1650 **29**			
4	481 **128**	966 **125**	1403 **121**	1824 **104**	2163 **81**		
6	477 **192**	957 **187**	1401 **181**	1813 **159**	2186 **121**	2485 **67**	
8	464 **257**	964 **251**	1428 **244**	1850 **212**	2249 **161**	2578 **90**	
10	437 **321**	941 **320**	1427 **316**	1836 **283**	2243 **240**	2620 **178**	2968 **115**
12	419 **385**	913 **382**	1401 **377**	1833 **353**	2229 **309**	2589 **249**	2960 **174**
14	405 **449**	881 **448**	1384 **444**	1824 **420**	2220 **372**	2582 **300**	2952 **235**
16	395 **513**	858 **510**	1363 **503**	1801 **485**	2192 **438**	2571 **356**	2940 **280**
18	381 **577**	821 **576**	1327 **573**	1769 **553**	2183 **495**	2520 **414**	2931 **334**
20	369 **642**	799 **642**	1308 **641**	1772 **616**	2146 **578**	2513 **507**	2904 **405**
22	350 **706**	779 **706**	1272 **705**	1742 **678**	2114 **608**	2503 **534**	2884 **452**
25		710 **802**	1169 **801**	1604 **770**	1997 **691**	2314 **606**	2647 **513**
30		653 **962**	1066 **962**	1444 **924**	1776 **830**	2097 **728**	2366 **616**

TORQUE (LB IN) 2647
SPEED (RPM) 513

118 cc / rev

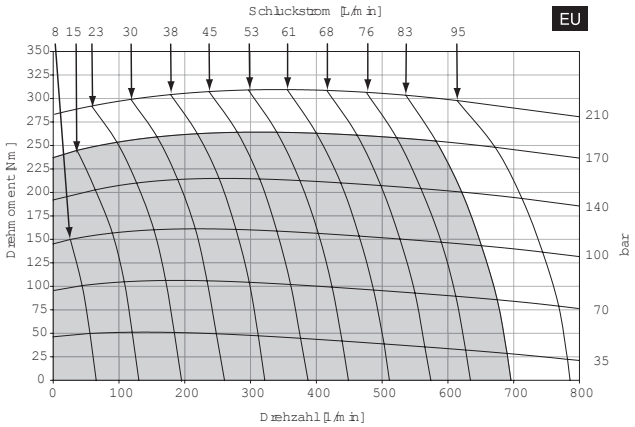

Cont. Int.

Intermittent operation rating applies to 10% of every minute.

Fonctionnement interm. 10% max. de chaque minute d`utilisation.

Performance data based on tests using 15W40 oil with a viscosity of 55 cSt (215 SUS) at 54° C (130° F.) Performance data is typical. Actual data may vary slightly from one production motor to another.

Les donnees sur les performances sont basees sur des tests utilisant de l'huile 15W40 d'une viscosite de 55 cSt (215 SUS) a 54°C (130°F). Ces donnees correspondent a des situations typiques. Les donnees reelles peuvent varier legerement d'un moteur de production a l'autre.

Intermittierende Werte maximal 10% von jeder Betriebsminute.

Capacidad de funcionamiento intermitente valida para 10% por cada minuto.

Leistugsdaten sind gemessen mit SAE 15W40 bei einer Viskositaet von 43,1 Cst beo 54°C. Geringfuegige Abweichungen von den Katalogerten sond moeglich.

Datos tecnicos obtenidos con aceite 15W40 de 55 cSt (215 SUS) de viscosidad a 54°C (130°F). Los datos proporcionados son valores tipcos. Los valores exactos reales podrian tener una pequena variacion entre distintos motores.

108 Series

5.4 cu in / rev

PRESSURE (PSID)

FLOW (GPM)	500	1000	1500	2000	2500	3000	3500
2	366 **86**	727 **84**	1084 **80**	1431 **74**	1740 **62**	2036 **52**	
4	361 **171**	725 **171**	1071 **170**	1462 **163**	1816 **150**	2122 **135**	2424 **110**
6	329 **257**	690 **256**	1066 **255**	1443 **252**	1812 **242**	2159 **224**	2455 **200**
8	289 **342**	654 **341**	1029 **342**	1395 **340**	1764 **330**	2118 **317**	2463 **288**
10	229 **428**	593 **427**	968 **427**	1337 **425**	1712 **419**	2078 **406**	2375 **379**
12	151 **513**	509 **513**	882 **512**	1271 **511**	1636 **505**	1979 **481**	2324 **459**
14	77 **599**	426 **599**	800 **598**	1194 **596**	1552 **588**	1874 **571**	2253 **547**
16	40 **684**	342 **684**	720 **683**	1133 **680**	1469 **671**	1790 **649**	2146 **656**
18		259 **769**	627 **769**	1031 **765**	1339 **755**	1642 **738**	1961 **731**
20			536 **855**	858 **850**	1139 **845**	1407 **817**	1678 **788**
22			452 **940**	775 **935**	1031 **930**	1277 **899**	1532 **867**

TORQUE (LB IN) 1678
SPEED (RPM) 788

88 cc / rev

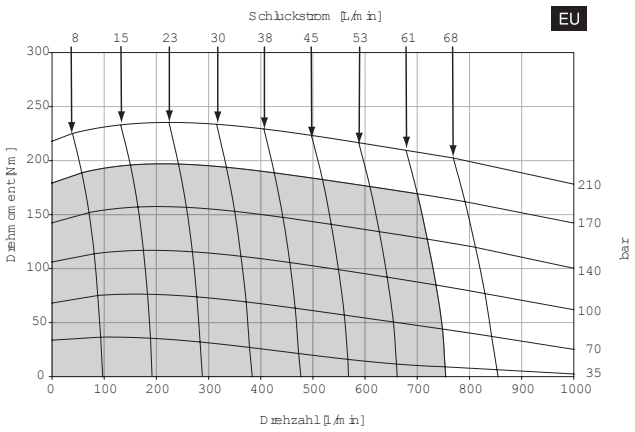

■ Cont. □ Int.

Intermittent operation rating applies to 10% of every minute.

Fonctionnement interm. 10% max. de chaque minute d`utilisation.

Intermittierende Werte maximal 10% von jeder Betriebsminute.

Capacidad de funcionamiento intermitente valida para 10% por cada minuto.

Performance data based on tests using 15W40 oil with a viscosity of 55 cSt (215 SUS) at 54° C (130° F.) Performance data is typical. Actual data may vary slightly from one production motor to another.

Les donnees sur les performances sont basees sur des tests utilisant de l'huile 15W40 d'une viscosite de 55 cSt (215 SUS) a 54°C (130°F). Ces donnees correspondent a des situations typiques. Les donnees reelles peuvent varier legerement d'un moteur de production a l'autre.

Leistugsdaten sind gemessen mit SAE 15W40 bei einer Viskositaet von 43,1 Cst beo 54°C. Geringfuegige Abweichungen von den Katalogerten sond moeglich.

Datos tecnicos obtenidos con aceite 15W40 de 55 cSt (215 SUS) de viscosidad a 54°C (130°F). Los datos proporcionados son valores tipcos. Los valores exactos reales podrian tener una pequena variacion entre distintos motores.

108 Parallel

10.8 cu in / rev

PRESSURE (PSID)

FLOW (GPM)	500	1000	1500	2000	2500	3000	3500
2	683 **42**	1366 **40**	1970 **33**				
4	729 **85**	1455 **83**	2140 **78**	2809 **65**	3383 **47**		
6	728 **128**	1465 **124**	2150 **120**	2801 **105**	3399 **76**		
8	711 **171**	1469 **168**	2185 **163**	2856 **142**	3491 **110**		
10	678 **214**	1442 **213**	2182 **211**	2838 **189**	3482 **159**	4104 **77**	
12	651 **257**	1401 **254**	2150 **252**	2833 **235**	3456 **205**	4022 **109**	
14	630 **299**	1362 **298**	2104 **295**	2814 **280**	3445 **246**	4012 **131**	4614 **75**
16	611 **342**	1329 **340**	2095 **335**	2778 **323**	3408 **290**	3981 **226**	4598 **151**
18	587 **385**	1295 **383**	2051 **379**	2756 **368**	3364 **333**	3898 **267**	4519 **184**
20	565 **428**	1250 **426**	2013 **425**	2723 **411**	3335 **382**	3878 **317**	4482 **236**
22	539 **469**	1215 **469**	1962 **467**	2678 **452**	3295 **409**	3847 **338**	4451 **257**
25		1123 **534**	1834 **532**	2515 **513**	3108 **464**	3594 **385**	4309 **290**
30		1037 **641**	1693 **639**	2313 **615**	2828 **557**	3311 **462**	4151 **379**

TORQUE (LB IN) 4309
SPEED (RPM) 290

177 cc / rev

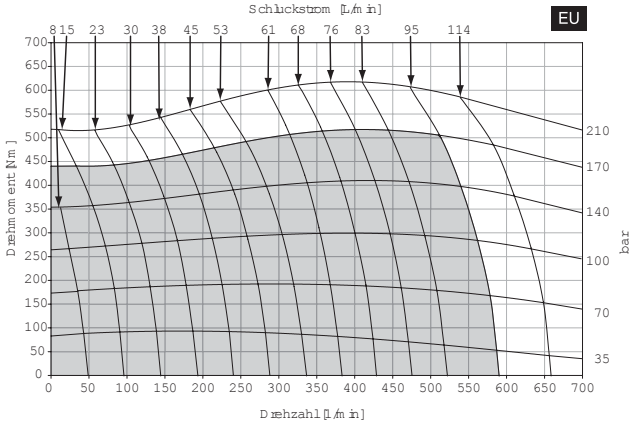

Cont. Int.

Intermittent operation rating applies to 10% of every minute.

Fonctionnement interm. 10% max. de chaque minute d`utilisation.

Intermittierende Werte maximal 10% von jeder Betriebsminute.

Capacidad de funcionamiento intermitente valida para 10% por cada minuto.

Performance data based on tests using 15W40 oil with a viscosity of 55 cSt (215 SUS) at 54° C (130° F.) Performance data is typical. Actual data may vary slightly from one production motor to another.

Les donnees sur les performances sont basees sur des tests utilisant de l'huile 15W40 d'une viscosite de 55 cSt (215 SUS) a 54°C (130°F). Ces donnees correspondent a des situations typiques. Les donnees reelles peuvent varier legerement d'un moteur de production a l'autre.

Leistugsdaten sind gemessen mit SAE 15W40 bei einer Viskositaet von 43,1 Cst beo 54°C. Geringfuegige Abweichungen von den Katalogerten sond moeglich.

Datos tecnicos obtenidos con aceite 15W40 de 55 cSt (215 SUS) de viscosidad a 54°C (130°F). Los datos proporcionados son valores tipcos. Los valores exactos reales podrian tener una pequena variacion entre distintos motores.

142 Series

7.1 cu in / rev

PRESSURE (PSID)

	500	1000	1500	2000	2500	3000	3500
2	484 **65**	964 **64**	1434 **62**	1907 **58**	2319 **50**	2759 **43**	
4	474 **130**	968 **130**	1444 **130**	1948 **126**	2410 **118**	2819 **107**	3264 **87**
6	438 **195**	930 **195**	1428 **194**	1926 **192**	2417 **1987**	2875 **174**	3285 **158**
8	391 **260**	889 **260**	1381 **260**	1870 **259**	2359 **253**	2838 **245**	3298 **226**
10	327 **325**	821 **324**	1324 **324**	1804 **323**	2298 **320**	2776 **313**	3215 **295**
12	249 **390**	728 **390**	1226 **390**	1725 **388**	2217 **385**	2664 **372**	3092 **358**
14	184 **455**	643 **455**	1141 **454**	1648 **452**	2116 **447**	2573 **439**	3063 **427**
16	101 **520**	532 **520**	1040 **519**	1558 **516**	2011 **511**	2474 **501**	2949 **497**
18		439 **585**	930 **584**	1441 **581**	1876 **575**	2325 **564**	2790 **559**
20		300 **651**	810 **650**	1275 **647**	1712 **643**	2125 **629**	2535 **612**
22		249 **716**	707 **715**	1169 **711**	1594 **707**	1983 **692**	2386 **673**

FLOW (GPM)

TORQUE (LB IN) 2535
SPEED (RPM) 612

116 cc / rev

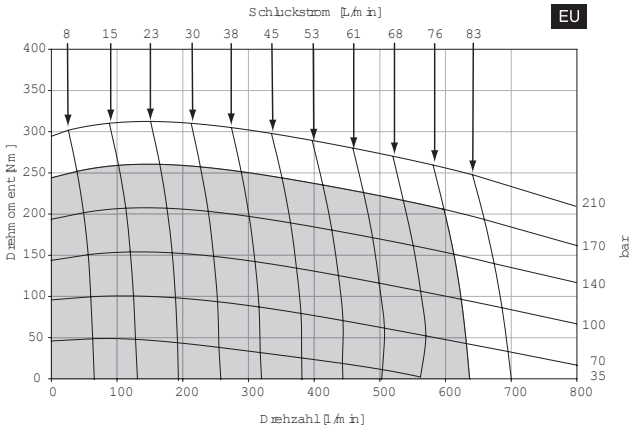

Cont. Int.

Intermittent operation rating applies to 10% of every minute.

Fonctionnement interm. 10% max. de chaque minute d`utilisation.

Intermittierende Werte maximal 10% von jeder Betriebsminute.

Capacidad de funcionamiento intermitente valida para 10% por cada minuto.

Performance data based on tests using 15W40 oil with a viscosity of 55 cSt (215 SUS) at 54° C (130° F.) Performance data is typical. Actual data may vary slightly from one production motor to another.

Les donnees sur les performances sont basees sur des tests utilisant de l'huile 15W40 d'une viscosite de 55 cSt (215 SUS) a 54°C (130°F). Ces donnees correspondent a des situations typiques. Les donnees reelles peuvent varier legerement d'un moteur de production a l'autre.

Leistugsdaten sind gemessen mit SAE 15W40 bei einer Viskositaet von 43,1 Cst beo 54°C. Geringfuegige Abweichungen von den Katalogerten sond moeglich.

Datos tecnicos obtenidos con aceite 15W40 de 55 cSt (215 SUS) de viscosidad a 54°C (130°F). Los datos proporcionados son valores tipcos. Los valores exactos reales podrian tener una pequena variacion entre distintos motores.

142 Parallel

14.2 cu in / rev

PRESSURE (PSID)

FLOW (GPM)	500	1000	1500	2000	2500	3000	3250
2	925 **32**	1836 **31**	2668 **26**	3467 **16**			
4	969 **65**	1920 **63**	2860 **57**	3784 **46**	4619 **31**		
6	971 **97**	1963 **94**	2886 **90**	3785 **79**	4619 **55**		
8	954 **130**	1962 **128**	2927 **125**	3858 **108**	4736 **85**		
10	918 **163**	1933 **162**	2921 **160**	3837 **145**	4724 **121**		
12	884 **195**	1882 **193**	2886 **191**	3829 **179**	4685 **164**		
14	857 **228**	1841 **226**	2831 **224**	3796 **212**	4672 **191**		
16	826 **260**	1799 **259**	2816 **255**	3747 **246**	4630 **219**	5261 **164**	
18	790 **293**	1754 **290**	2755 **286**	3703 **280**	4557 **246**	5207 **197**	5523 **164**
20	757 **325**	1709 **323**	2710 **322**	3661 **313**	4528 **273**	5166 **226**	5472 **198**
22	726 **356**	1655 **356**	2648 **353**	3603 **344**	4485 **301**	5099 **245**	5259 **211**
25	452 **406**	1547 **405**	2513 **403**	3441 **390**	4227 **342**	4861 **278**	5068 **239**
30	374 **488**	1436 **486**	2344 **484**	3225 **468**	3921 **410**	4577 **334**	4921 **294**

TORQUE (LB IN) 5068
SPEED (RPM) 239

233 cc / rev

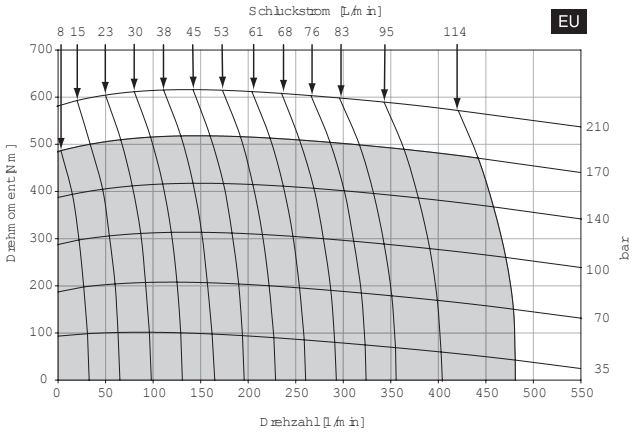

Cont. Int.

Intermittent operation rating applies to 10% of every minute.

Fonctionnement interm. 10% max. de chaque minute d`utilisation.

Intermittierende Werte maximal 10% von jeder Betriebsminute.

Capacidad de funcionamiento intermitente valida para 10% por cada minuto.

Performance data based on tests using 15W40 oil with a viscosity of 55 cSt (215 SUS) at 54° C (130° F.) Performance data is typical. Actual data may vary slightly from one production motor to another.

Les donnees sur les performances sont basees sur des tests utilisant de l'huile 15W40 d'une viscosite de 55 cSt (215 SUS) a 54°C (130°F). Ces donnees correspondent a des situations typiques. Les donnees reelles peuvent varier legerement d'un moteur de production a l'autre.

Leistugsdaten sind gemessen mit SAE 15W40 bei einer Viskositaet von 43,1 Cst beo 54°C. Geringfuegige Abweichungen von den Katalogerten sond moeglich.

Datos tecnicos obtenidos con aceite 15W40 de 55 cSt (215 SUS) de viscosidad a 54°C (130°F). Los datos proporcionados son valores tipcos. Los valores exactos reales podrian tener una pequena variacion entre distintos motores.

176 Series

8.8 cu in / rev

PRESSURE (PSID)

	500	1000	1500	2000	2500	3000	3500
2	604 **52**	1204 **52**	1788 **50**	2395 **49**	2913 **43**	3521 **38**	
4	588 **105**	1217 **105**	1834 **105**	2445 **104**	3022 **98**	3529 **90**	4142 **73**
6	548 **158**	1179 **157**	1803 **157**	2423 **155**	3039 **153**	3609 **143**	4142 **131**
8	497 **210**	1137 **209**	1748 **210**	2364 **208**	2973 **206**	3584 **201**	4162 **188**
10	436 **263**	1070 **262**	1704 **261**	2291 **260**	2906 **259**	3496 **256**	4098 **244**
12	371 **315**	976 **315**	1601 **315**	2204 **313**	2829 **311**	3441 **305**	4034 **295**
14	332 **367**	899 **367**	1525 **366**	2140 **363**	2717 **361**	3324 **358**	3922 **353**
16	186 **420**	762 **419**	1405 **418**	2017 **416**	2591 **413**	3214 **410**	3814 **400**
18		665 **472**	1284 **471**	1891 **468**	2468 **465**	3088 **462**	3721 **450**
20		553 **524**	1134 **524**	1762 **522**	2388 **519**	2975 **514**	3549 **503**
22		459 **576**	1017 **576**	1636 **574**	2272 **571**	2836 **565**	3417 **554**
25		81 **655**	721 **655**	1375 **652**	1968 **648**	2534 **637**	3113 **624**
30			284 **786**	958 **782**	1562 **778**	2097 **765**	2691 **749**

FLOW (GPM)

TORQUE (LB IN) 3549
SPEED (RPM) 503

144 cc / rev

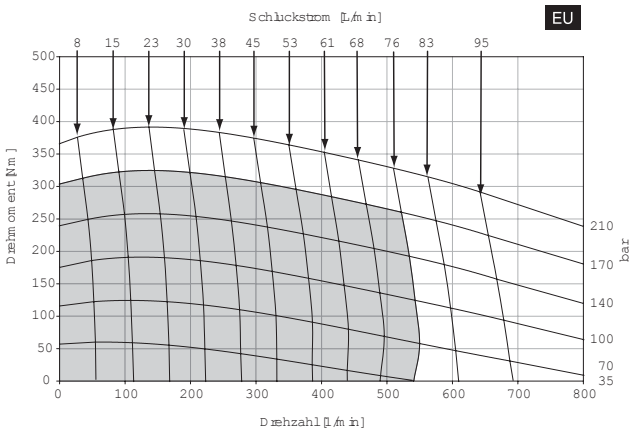

Cont. Int.

Intermittent operation rating applies to 10% of every minute.

Fonctionnement interm. 10% max. de chaque minute d`utilisation.

Performance data based on tests using 15W40 oil with a viscosity of 55 cSt (215 SUS) at 54° C (130° F.) Performance data is typical. Actual data may vary slightly from one production motor to another.

Les donnees sur les performances sont basees sur des tests utilisant de l'huile 15W40 d'une viscosite de 55 cSt (215 SUS) a 54°C (130°F). Ces donnees correspondent a des situations typiques. Les donnees reelles peuvent varier legerement d'un moteur de production a l'autre.

Intermittierende Werte maximal 10% von jeder Betriebsminute.

Capacidad de funcionamiento intermitente valida para 10% por cada minuto.

Leistugsdaten sind gemessen mit SAE 15W40 bei einer Viskositaet von 43,1 Cst beo 54°C. Geringfuegige Abweichungen von den Katalogerten sond moeglich.

Datos tecnicos obtenidos con aceite 15W40 de 55 cSt (215 SUS) de viscosidad a 54°C (130°F). Los datos proporcionados son valores tipcos. Los valores exactos reales podrian tener una pequena variacion entre distintos motores.

176 Parallel

17.6 cu in / rev

PRESSURE (PSID)

	500	1000	1500	2000	2250	2500	2750
2	1179 **26**	2325 **26**	3403 **22**				
4	1214 **52**	2412 **51**	3601 **44**	4801 **34**			
6	1221 **79**	2479 **75**	3651 **72**	4818 **64**	5338 **55**		
8	1206 **105**	2468 **104**	3693 **101**	4908 **88**	5483 **83**	6050 **70**	
10	1172 **131**	2443 **130**	3685 **129**	4885 **117**	5464 **108**	6036 **97**	6532 **93**
12	1130 **157**	2381 **156**	3651 **155**	4874 **144**	5420 **137**	5980 **125**	6394 **112**
14	1097 **184**	2345 **182**	3613 **180**	4824 **171**	5408 **164**	5966 **149**	6363 **130**
16	1052 **210**	2294 **209**	3567 **206**	4762 **198**	5345 **189**	5924 **175**	6317 **149**
18	1003 **236**	2238 **233**	3487 **229**	4689 **226**	5275 **216**	5812 **208**	6255 **184**
20	955 **262**	2199 **260**	3437 **258**	4639 **253**	5231 **240**	5791 **231**	6209 **205**
22	922 **286**	2123 **286**	3366 **283**	4566 **277**	5200 **264**	5749 **254**	6147 **225**
25	832 **328**	2006 **326**	3240 **324**	4431 **314**	4954 **302**	5413 **289**	5816 **256**
30	689 **393**	1868 **392**	3050 **389**	4224 **377**	4651 **362**	5112 **347**	5546 **307**

FLOW (GPM)

TORQUE (LB IN) 5816
SPEED (RPM) 256

288 cc / rev

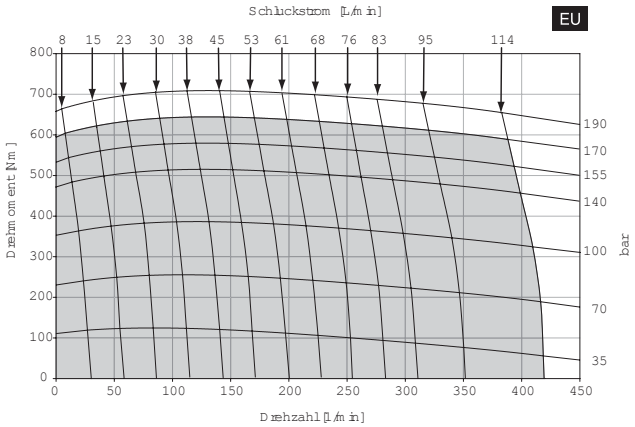

Cont. Int.

Intermittent operation rating applies to 10% of every minute.

Fonctionnement interm. 10% max. de chaque minute d`utilisation.

Intermittierende Werte maximal 10% von jeder Betriebsminute.

Capacidad de funcionamiento intermitente valida para 10% por cada minuto.

Performance data based on tests using 15W40 oil with a viscosity of 55 cSt (215 SUS) at 54° C (130° F.) Performance data is typical. Actual data may vary slightly from one production motor to another.

Les donnees sur les performances sont basees sur des tests utilisant de l'huile 15W40 d'une viscosite de 55 cSt (215 SUS) a 54°C (130°F). Ces donnees correspondent a des situations typiques. Les donnees reelles peuvent varier legerement d'un moteur de production a l'autre.

Leistugsdaten sind gemessen mit SAE 15W40 bei einer Viskositaet von 43,1 Cst beo 54°C. Geringfuegige Abweichungen von den Katalogerten sond moeglich.

Datos tecnicos obtenidos con aceite 15W40 de 55 cSt (215 SUS) de viscosidad a 54°C (130°F). Los datos proporcionados son valores tipcos. Los valores exactos reales podrian tener una pequena variacion entre distintos motores.

212 Series

10.6 cu in / rev

PRESSURE (PSID)

FLOW (GPM)	500	1000	1500	1750	2000	2250	2500	2750	3000	3250
2	731 **44**	1458 **43**	2162 **42**	2509 **42**	2901 **40**	3175 **39**	3532 **36**			
4	712 **87**	1468 **87**	2210 **87**	2562 **87**	2946 **86**	3274 **84**	3641 **81**	3955 **80**	4269 **75**	4623 **71**
6	665 **131**	1426 **130**	2175 **130**	2553 **129**	2920 **128**	3290 **127**	3658 **127**	4009 **123**	4351 **119**	4702 **115**
8	603 **174**	1371 **174**	2110 **174**	2473 **173**	2854 **173**	3229 **171**	3587 **170**	3961 **170**	4323 **166**	4674 **161**
10	527 **218**	1287 **217**	2053 **217**	2406 **216**	2767 **215**	3136 **215**	3508 **214**	3872 **213**	4223 **212**	
12	450 **262**	1182 **261**	1935 **261**	2315 **260**	2665 **259**	3040 **258**	3414 **257**	3775 **256**	4150 **251**	
14	390 **305**	1089 **304**	1844 **303**	2210 **302**	2588 **301**	2940 **300**	3291 **299**	3667 **298**	3948 **293**	
16	225 **349**	929 **348**	1703 **347**	2076 **346**	2443 **346**	2789 **345**	3149 **343**	3526 **338**	3846 **335**	
18		806 **391**	1559 **391**	1921 **389**	2300 **389**	2672 **388**	2995 **384**	3340 **380**	3644 **377**	
20		669 **435**	1377 **435**	1769 **434**	2128 **433**	2498 **432**	2741 **427**	2992 **423**	3239 **418**	
22		567 **478**	1244 **478**	1612 **477**	1994 **476**	2337 **475**	2657 **470**	2876 **465**	3113 **460**	
25		153 **544**	900 **544**	1244 **543**	1676 **541**	2037 **540**	2404 **534**	2830 **528**	3037 **523**	
30			398 **653**	732 **651**	1183 **650**	1534 **648**	1898 **641**	2366 **641**	2531 **628**	

TORQUE (LB IN) 3113
SPEED (RPM) 460

174 cc / rev

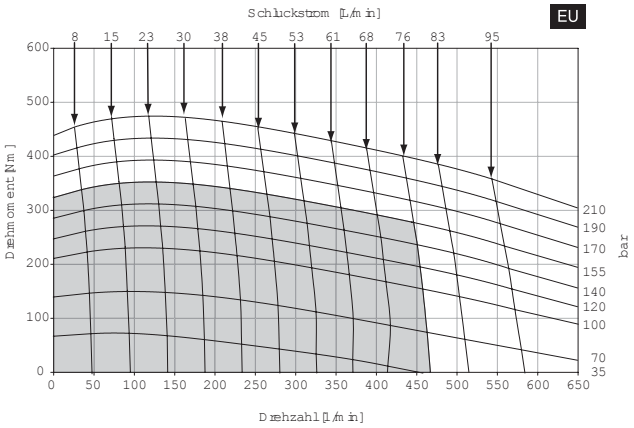

Cont. Int.

Intermittent operation rating applies to 10% of every minute.

Fonctionnement interm. 10% max. de chaque minute d`utilisation.

Performance data based on tests using 15W40 oil with a viscosity of 55 cSt (215 SUS) at 54° C (130° F.) Performance data is typical. Actual data may vary slightly from one production motor to another.

Les donnees sur les performances sont basees sur des tests utilisant de l'huile 15W40 d'une viscosite de 55 cSt (215 SUS) a 54°C (130°F). Ces donnees correspondent a des situations typiques. Les donnees reelles peuvent varier legerement d'un moteur de production a l'autre.

Intermittierende Werte maximal 10% von jeder Betriebsminute.

Capacidad de funcionamiento intermitente valida para 10% por cada minuto.

Leistugsdaten sind gemessen mit SAE 15W40 bei einer Viskositaet von 43,1 Cst beo 54°C. Geringfuegige Abweichungen von den Katalogerten sond moeglich.

Datos tecnicos obtenidos con aceite 15W40 de 55 cSt (215 SUS) de viscosidad a 54°C (130°F). Los datos proporcionados son valores tipcos. Los valores exactos reales podrian tener una pequena variacion entre distintos motores.

212 Parallel

21.2 cu in / rev

PRESSURE (PSID)

FLOW (GPM)	500	1000	1250	1500	1750	2000	2250	2500
2	1413 **22**	2789 **21**	3434 **19**	4057 **18**	4676 **15**	5276 **11**		
4	1455 **44**	2874 **42**	3580 **39**	4299 **36**	5036 **34**	5719 **29**		
6	1471 **65**	2970 **63**	3686 **61**	4380 **60**	5047 **56**	5777 **52**	6388 **46**	
8	1455 **87**	2964 **86**	3698 **85**	4429 **84**	5163 **80**	5877 **73**	6498 **69**	7170 **47**
10	1413 **109**	2938 **108**	3678 **108**	4429 **107**	5135 **103**	5869 **98**	6520 **90**	7187 **65**
12	1366 **131**	2871 **129**	3627 **129**	4390 **128**	5112 **127**	5845 **120**	6492 **115**	7069 **105**
14	1326 **153**	2827 **151**	3542 **150**	4256 **149**	5052 **148**	5785 **143**	6476 **137**	6984 **122**
16	1269 **174**	2767 **173**	3522 **172**	4241 **171**	5005 **169**	5718 **165**	6400 **158**	6900 **139**
18	1215 **196**	2699 **194**	3445 **193**	4207 **191**	4948 **190**	5643 **188**	6326 **180**	6833 **157**
20	1158 **218**	2656 **216**	3393 **215**	4153 **213**	4898 **209**	5587 **210**	6210 **200**	6790 **174**
22	1114 **240**	2572 **238**	3297 **237**	4068 **236**	4806 **234**	5493 **230**	6226 **220**	6740 **192**
25	1004 **272**	2439 **271**	3165 **270**	3897 **269**	4659 **266**	5347 **261**	5982 **252**	6647 **218**
30	831 **327**	2299 **325**	2973 **324**	3690 **323**	4393 **319**	5093 **313**	5709 **302**	6267 **262**

TORQUE (LB IN) 6647
SPEED (RPM) 218

347 cc / rev

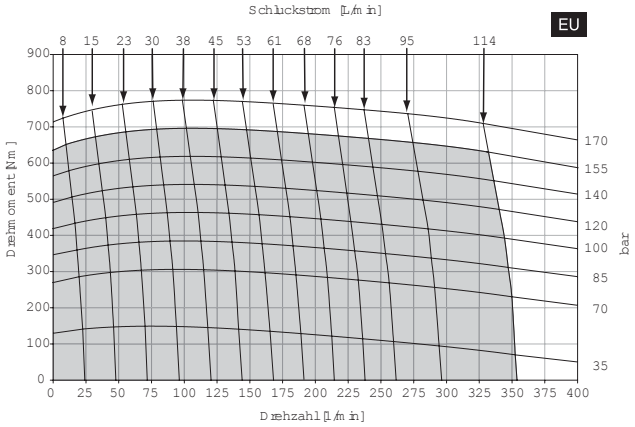

Cont. Int.

Intermittent operation rating applies to 10% of every minute.

Fonctionnement interm. 10% max. de chaque minute d`utilisation.

Performance data based on tests using 15W40 oil with a viscosity of 55 cSt (215 SUS) at 54° C (130° F.) Performance data is typical. Actual data may vary slightly from one production motor to another.

Les donnees sur les performances sont basees sur des tests utilisant de l'huile 15W40 d'une viscosite de 55 cSt (215 SUS) a 54°C (130°F). Ces donnees correspondent a des situations typiques. Les donnees reelles peuvent varier legerement d'un moteur de production a l'autre.

Intermittierende Werte maximal 10% von jeder Betriebsminute.

Capacidad de funcionamiento intermitente valida para 10% por cada minuto.

Leistugsdaten sind gemessen mit SAE 15W40 bei einer Viskositaet von 43,1 Cst beo 54°C. Geringfuegige Abweichungen von den Katalogerten sond moeglich.

Datos tecnicos obtenidos con aceite 15W40 de 55 cSt (215 SUS) de viscosidad a 54°C (130°F). Los datos proporcionados son valores tipcos. Los valores exactos reales podrian tener una pequena variacion entre distintos motores.

258 Series

12.9 cu in / rev

PRESSURE (PSID)

FLOW (GPM)	500	1000	1500	1750	2000	2250	2500	2750	3000
2	905 **36**	1811 **36**	2673 **35**	3155 **35**	3613 **33**	3950 **33**	4414 **31**	4822 **30**	5226 **26**
4	882 **72**	1799 **72**	2692 **71**	3147 **71**	3585 **70**	4014 **69**	4440 **66**	4850 **65**	5287 **62**
6	834 **107**	1762 **107**	2645 **106**	3119 **106**	3560 **104**	4000 **104**	4440 **103**	4856 **101**	5318 **98**
8	757 **143**	1675 **143**	2593 **142**	3036 **141**	3507 **140**	3940 **139**	4399 **138**	4839 **137**	5292 **135**
10	652 **179**	1556 **178**	2504 **177**	2957 **176**	3400 **175**	3857 **174**	4306 **173**	4771 **172**	5201 **171**
12	565 **215**	1472 **213**	2390 **212**	2867 **210**	3289 **208**	3737 **208**	4188 **207**	4635 **207**	5072 **205**
14	423 **251**	1357 **249**	2279 **249**	2731 **248**	3199 **245**	3668 **243**	4096 **243**	4517 **241**	4957 **239**
16	278 **287**	1187 **286**	2125 **286**	2587 **285**	3043 **284**	3525 **283**	3973 **283**		
18		1006 **321**	1962 **321**	2440 **319**	2911 **319**	3349 **318**			
20		827 **357**	1728 **357**	2264 **356**	2620 **355**	3003 **354**			
22		758 **393**	1614 **393**	2037 **392**	2546 **390**	2975 **390**			
25		466 **446**	1260 **446**	1681 **446**	2135 **445**	2624 **443**			
30			773 **537**	1099 **536**	1585 **535**	2079 **534**			

TORQUE (LB IN) 1099
SPEED (RPM) 536

211 cc / rev

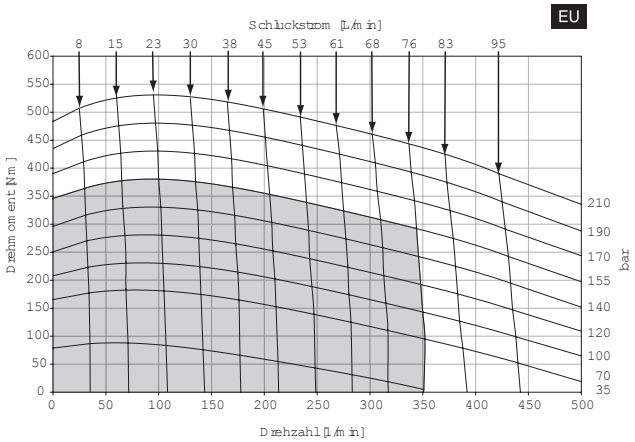

Cont. Int.

Intermittent operation rating applies to 10% of every minute.

Fonctionnement interm. 10% max. de chaque minute d`utilisation.

Performance data based on tests using 15W40 oil with a viscosity of 55 cSt (215 SUS) at 54° C (130° F.) Performance data is typical. Actual data may vary slightly from one production motor to another.

Les donnees sur les performances sont basees sur des tests utilisant de l'huile 15W40 d'une viscosite de 55 cSt (215 SUS) a 54°C (130°F). Ces donnees correspondent a des situations typiques. Les donnees reelles peuvent varier legerement d'un moteur de production a l'autre.

Intermittierende Werte maximal 10% von jeder Betriebsminute.

Capacidad de funcionamiento intermitente valida para 10% por cada minuto.

Leistugsdaten sind gemessen mit SAE 15W40 bei einer Viskositaet von 43,1 Cst beo 54°C. Geringfuegige Abweichungen von den Katalogerten sond moeglich.

Datos tecnicos obtenidos con aceite 15W40 de 55 cSt (215 SUS) de viscosidad a 54°C (130°F). Los datos proporcionados son valores tipcos. Los valores exactos reales podrian tener una pequena variacion entre distintos motores.

258 Parallel

25.8 cu in / rev

PRESSURE (PSID)

	500	1000	1250	1500	1750	2000	2250
2	1679 **18**	3334 **15**	4055 **14**	4724 **12**			
4	1731 **36**	3474 **34**	4224 **32**	5038 **30**	5979 **27**	6636 **25**	
6	1790 **54**	3531 **53**	4419 **51**	5235 **48**	6072 **45**	6898 **42**	7557 **38**
8	1782 **71**	3564 **71**	4435 **71**	5291 **68**	6115 **66**	6981 **60**	7715 **56**
10	1727 **89**	3552 **89**	4424 **88**	5340 **87**	6209 **84**	7063 **81**	7853 **76**
12	1684 **107**	3511 **107**	4424 **106**	5303 **104**	6187 **103**	6981 **100**	7715 **97**
14	1636 **125**	3457 **124**	4373 **124**	5279 **123**	6108 **123**	6915 **120**	7650 **118**
16	1556 **143**	3388 **143**	4312 **143**	5223 **142**	6050 **140**	6866 **138**	7594 **135**
18	1515 **161**	3301 **161**	4240 **160**	5149 **160**	6022 **159**	6841 **155**	7557 **151**
20	1445 **179**	3273 **179**	4193 **178**	5118 **178**	5979 **178**	6800 **172**	7502 **168**
22	1378 **197**	3203 **197**	4060 **196**	5020 **196**	5878 **195**	6652 **189**	7391 **185**
25	1234 **224**	3084 **224**	3998 **223**	4866 **222**	5763 **222**	6553 **215**	7354 **210**
30	1018 **268**	3043 **268**	3798 **267**	4570 **266**	5468 **266**	6225 **258**	6975 **252**

FLOW (GPM)

TORQUE (LB IN) 7354
SPEED (RPM) 210

423 cc / rev

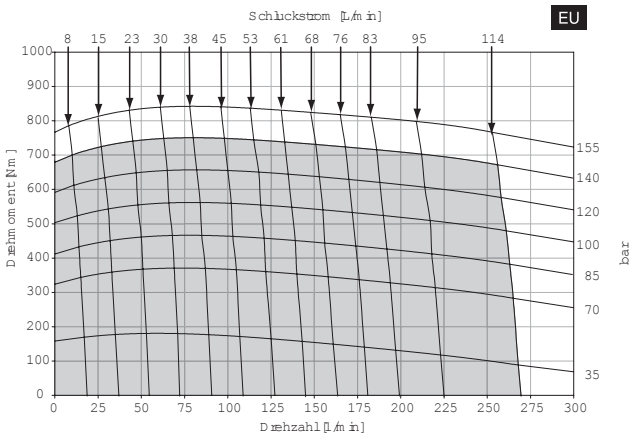

Cont. Int.

Intermittent operation rating applies to 10% of every minute.

Fonctionnement interm. 10% max. de chaque minute d`utilisation.

Intermittierende Werte maximal 10% von jeder Betriebsminute.

Capacidad de funcionamiento intermitente valida para 10% por cada minuto.

Performance data based on tests using 15W40 oil with a viscosity of 55 cSt (215 SUS) at 54° C (130° F.) Performance data is typical. Actual data may vary slightly from one production motor to another.

Les donnees sur les performances sont basees sur des tests utilisant de l'huile 15W40 d'une viscosite de 55 cSt (215 SUS) a 54°C (130°F). Ces donnees correspondent a des situations typiques. Les donnees reelles peuvent varier legerement d'un moteur de production a l'autre.

Leistugsdaten sind gemessen mit SAE 15W40 bei einer Viskositaet von 43,1 Cst beo 54°C. Geringfuegige Abweichungen von den Katalogerten sond moeglich.

Datos tecnicos obtenidos con aceite 15W40 de 55 cSt (215 SUS) de viscosidad a 54°C (130°F). Los datos proporcionados son valores tipcos. Los valores exactos reales podrian tener una pequena variacion entre distintos motores.

700 Series Roller Bearing Allowable Radial Load Curve
Chart A

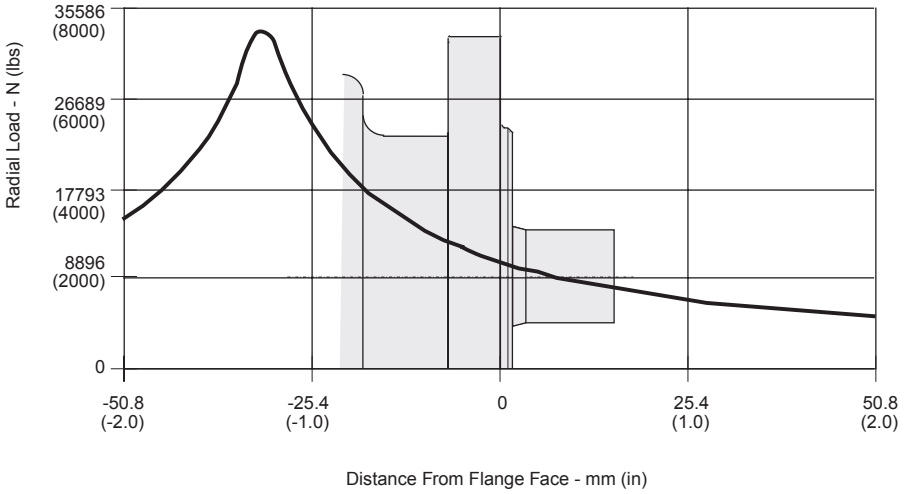

The allowable side load curve is based on L_{10} bearing life of 2.5 x 10^6 revolutions.
Die zulassige radiale Wellenbelastung bezieht sich auf die Lager-Lebensdauer 2.5 x 10^6 Umdrehungen.
L'effort radial admissible sur l'arbre depend a une duree de vie 2.5 x 10^6 de rotation.
La curva de carga lateral admisible se basa en vida util de cojinete de 2.5 x 10^6 revoluciones.

Bearing Life Factor Curve
Chart B

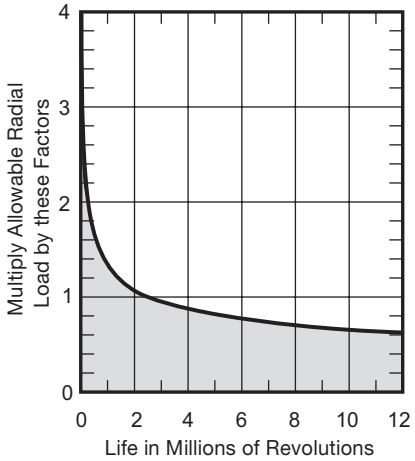

Note:
Side load should be considered a vector sum of all imposed loads.

Code: AM
SAE A, Manifold

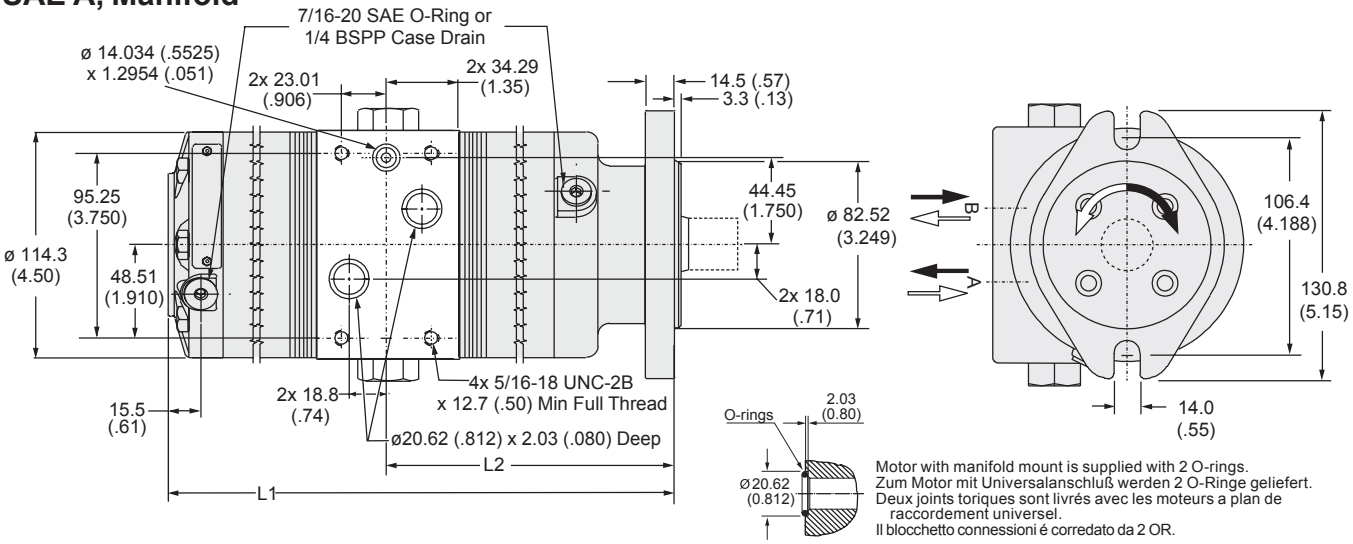

Code AM		072	108	142	176	212	258
Weight/Gewicht	**kg**	**15.9**	**16.1**	**16.2**	**16.4**	**16.6**	**16.8**
Poids/Peso	(lb)	(35.0)	(35.4)	(35.7)	(36.1)	(36.5)	(37.0)
Length	**"L1" mm**	**214.6**	**224.3**	**233.7**	**243.3**	**253.2**	**266.0**
	"L1" (in)	(8.45)	(8.83)	(9.20)	(9.58)	(9.97)	(10.47)
	"L2" mm	**123.2**	**128.0**	**132.9**	**137.7**	**142.5**	**148.8**
	"L2" (in)	(4.85)	(5.04)	(5.23)	(5.42)	(5.61)	(5.86)

Code: AS
SAE A, 7/8"-14 SAE

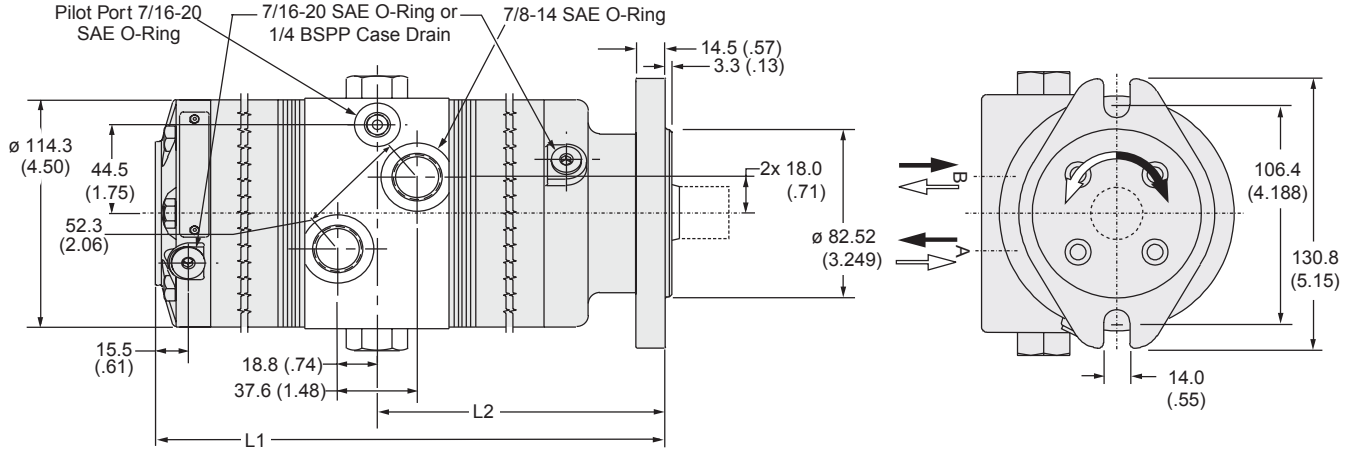

Code AS		072	108	142	176	212	258
Weight/Gewicht	**kg**	**15.9**	**16.1**	**16.2**	**16.4**	**16.6**	**16.8**
Poids/Peso	(lb)	(35.0)	(35.4)	(35.7)	(36.1)	(36.5)	(37.0)
Length	**"L1" mm**	**214.6**	**224.3**	**233.7**	**243.3**	**253.2**	**266.0**
	"L1" (in)	(8.45)	(8.83)	(9.20)	(9.58)	(9.97)	(10.47)
	"L2" mm	**123.2**	**128.0**	**132.9**	**137.7**	**142.5**	**148.8**
	"L2" (in)	(4.85)	(5.04)	(5.23)	(5.42)	(5.61)	(5.86)

English equivalents for metric specifications are shown in ( ).

021 700.indd, js

Code: BM
SAE B, Manifold

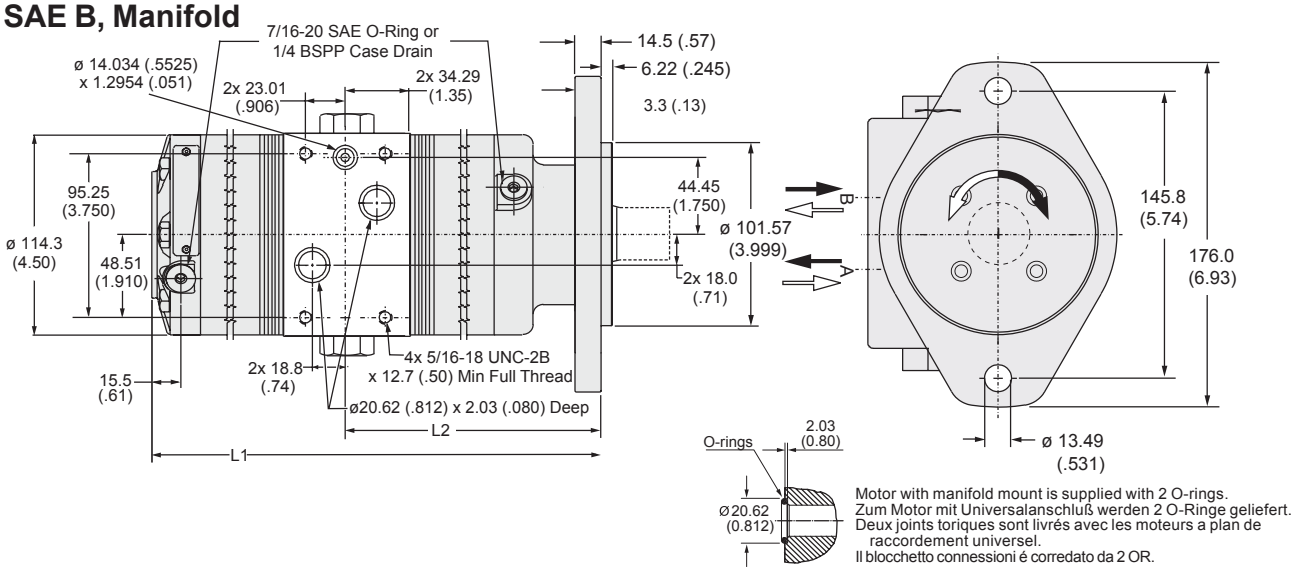

Motor with manifold mount is supplied with 2 O-rings.
Zum Motor mit Universalanschluß werden 2 O-Ringe geliefert.
Deux joints toriques sont livrés avec les moteurs a plan de raccordement universel.
Il blocchetto connessioni é corredato da 2 OR.

Code BM		072	108	142	176	212	258
Weight/Gewicht	**kg**	**15.9**	**16.1**	**16.2**	**16.4**	**16.6**	**16.8**
Poids/Peso	(lb)	(35.0)	(35.4)	(35.7)	(36.1)	(36.5)	(37.0)
Length	**"L1" mm**	**214.6**	**224.3**	**233.7**	**243.3**	**253.2**	**266.0**
	"L1" (in)	(8.45)	(8.83)	(9.20)	(9.58)	(9.97)	(10.47)
	"L2" mm	**123.2**	**128.0**	**132.9**	**137.7**	**142.5**	**148.8**
	"L2" (in)	(4.85)	(5.04)	(5.23)	(5.42)	(5.61)	(5.86)

Code: BS
SAE B, 7/8"-14 SAE

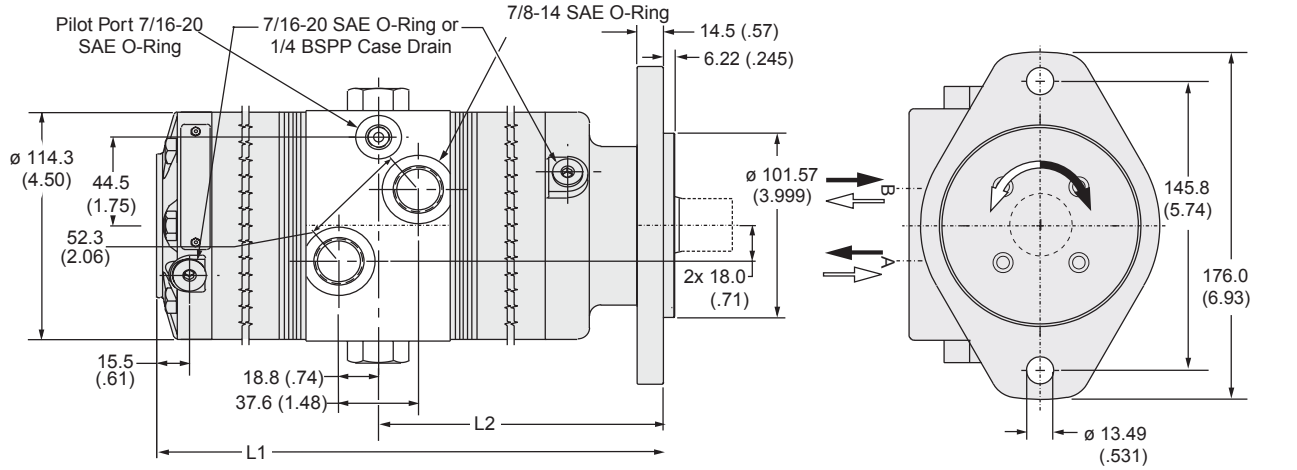

Code BS		072	108	142	176	212	258
Weight/Gewicht	**kg**	**15.9**	**16.1**	**16.2**	**16.4**	**16.6**	**16.8**
Poids/Peso	(lb)	(35.0)	(35.4)	(35.7)	(36.1)	(36.5)	(37.0)
Length	**"L1" mm**	**214.6**	**224.3**	**233.7**	**243.3**	**253.2**	**266.0**
	"L1" (in)	(8.45)	(8.83)	(9.20)	(9.58)	(9.97)	(10.47)
	"L2" mm	**123.2**	**128.0**	**132.9**	**137.7**	**142.5**	**148.8**
	"L2" (in)	(4.85)	(5.04)	(5.23)	(5.42)	(5.61)	(5.86)

English equivalents for metric specifications are shown in ( ).

021 700.indd, js

Parker Hannifin Corporation
Hydraulic Pump/Motor Division
Greeneville, Tennessee, USA

Code: PCL
Remotely Piloted, Closed, Parallel

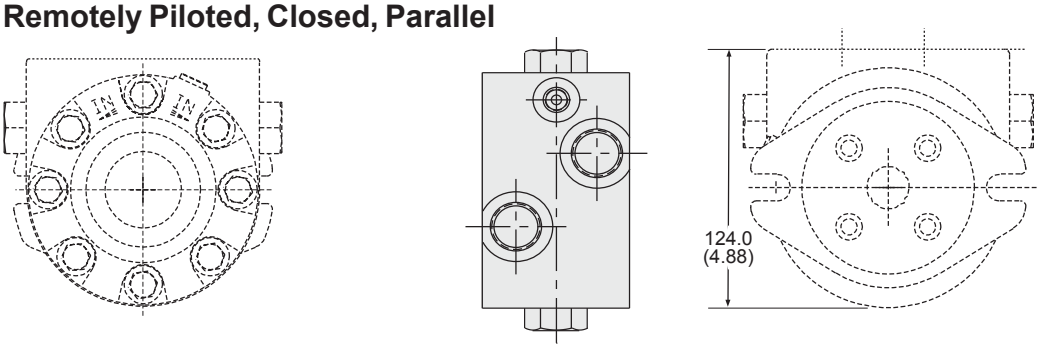

Code: POL
Remotely Piloted, Open, Parallel

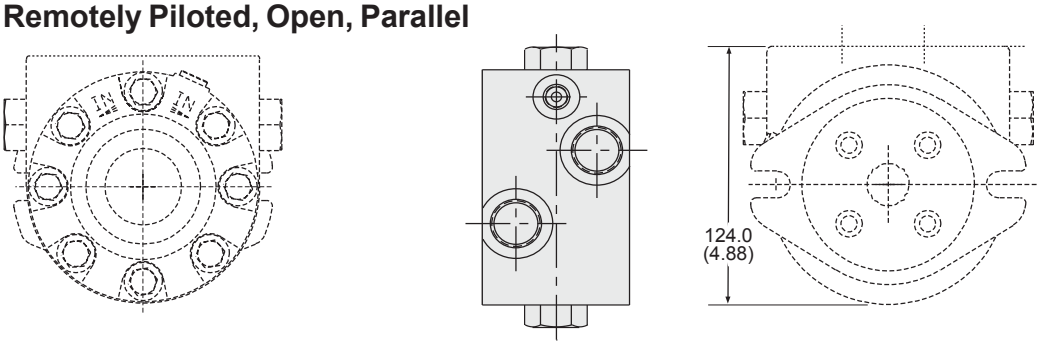

Code: SOL
Solenoid Actuated with Manual Override, Open, Parallel

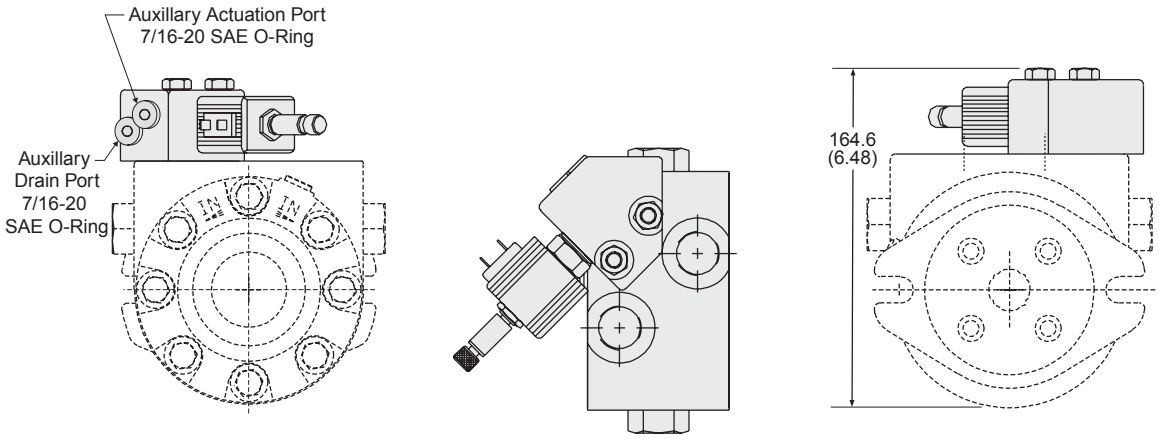

High Speed Series Mode

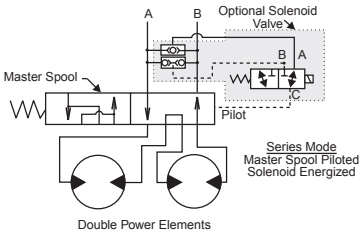

High Torque Parallel Mode

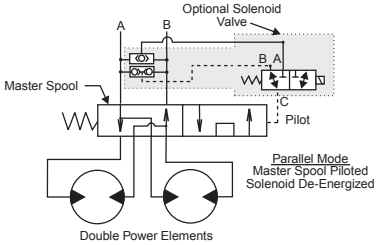

Add .5 kg (1.1 lb) for this option.
English equivalents for metric specifications are shown in ( ).

021 700.indd, js

Parker Hannifin Corporation
Hydraulic Pump/Motor Division
Greeneville, Tennessee, USA

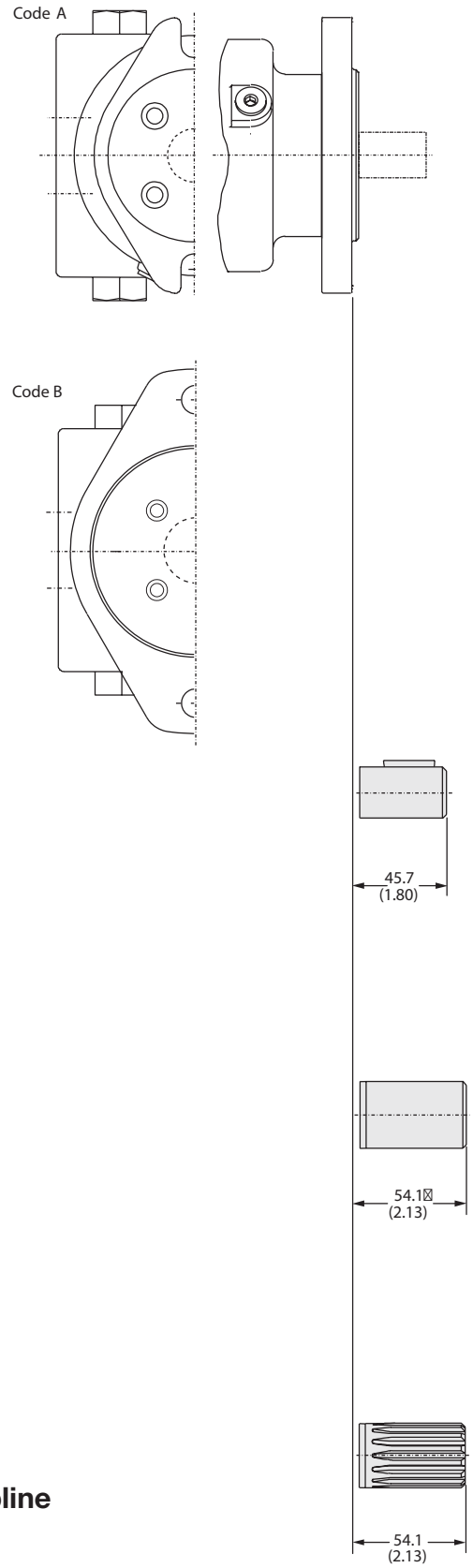

Code: 0

1” Keyed

Code: 3

1-1/4” Keyed

Code: 5

1-1/4”-14 Tooth Spline

English equivalents for metric specifications are shown in ( ).

021 700.indd, js

Parker Hannifin Corporation
Hydraulic Pump/Motor Division
Greeneville, Tennessee, USA

Code: 0

1" Keyed

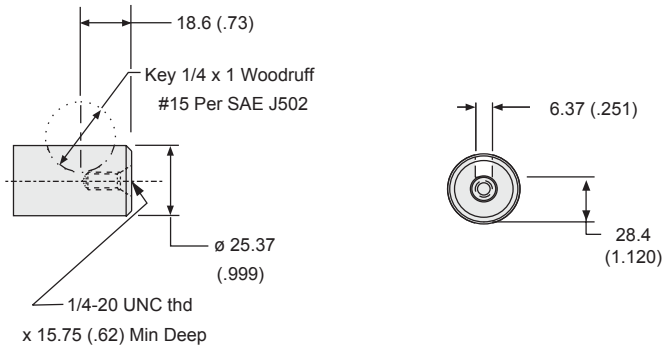

Code: 3

1-1/4" Keyed

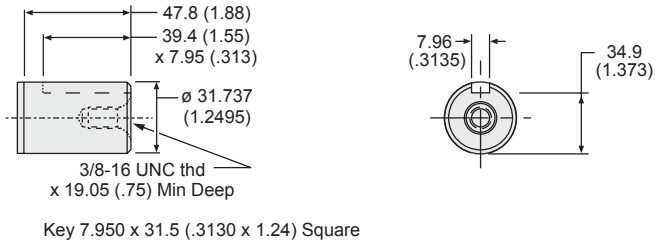

Key 7.950 x 31.5 (.3130 x 1.24) Square

Code: 5

1-1/4"-14 Tooth Spline

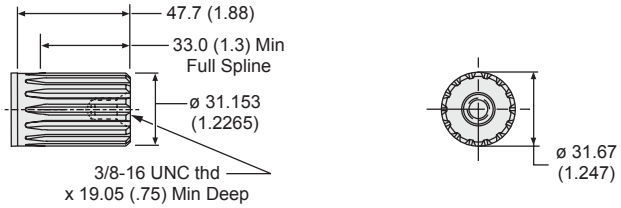

English equivalents for metric specifications are shown in ( ).

6 Displacements	**Series**		(3.6 – 12.9 in³/rev)
6 Schluckvolumen			**59…211 cm³/rev**
6 Cylindrée	**Parallel**		(7.2 – 25.8 in³/rev)
6 Despazamientos			**118…423 cm³/rev**
		Cont	**Int**
Maximum Pressure	**Series**	(2500 psid)	(3000 psid)
Eingangsdruck		**…170 bar**	**…210 bar**
Pression entrée	**Parallel**	(2000 psid)	(2500 psid)
Presion Maxima		**…140 bar**	**…170 bar**
Maximum Oil Flow	**Series**		(20 gpm)
Schluckstrom			**…76 lpm**
Débit d'huile	**Parallel**		(30 gpm)
Caudal Maximo de Aceite			**…114 lpm**
Maximum Speed	**Series**		**890 rpm**
Drehzahl	**Parallel**		**782 rpm**
Vitesse de rotation			
Velocidad Maxima			
		Cont	**Int**
Maximum Torque	**Series**	(3125 lb in)	(3844 lb in)
Max Drehmoment		**…353 Nm**	**…434 Nm**
Couple	**Parallel**	(3735 lb in)	(4666 lb in)
Torque Maximo		**…422 Nm**	**…527 Nm**
Maximum Side Load at Key	**Series**		(700 lb)
			… 3114 N
Seitenlast			
Charges latèrales			
Carga Maxima Lateral			

High Efficiency, High Flow Two-Speed Motor

Parker's patented two-speed motor utilizes two separate IGR™ power elements on a common shaft. An integral selector valve shifts between high torque, low speed (parallel) operation and high speed, low torque (series) mode in a ration of 2:1. The use of two power elements eliminates the deficiencies of traditional, single power element designs. In the high torque mode, the motor delivers twice the torque and half the speed that it does in the high speed mode. The selector valve can be open or closed center and may be actuated by an external pilot or optional solenoid valve. The open center selector valve can be shifted "on the fly" while the motor shaft is rotating under load. The selector valve is spring loaded to return to its pilot-pressure-off position. Normal mode of operation is field changeable and can be selected as series or parallel. Pilot pressure must be 300 psi higher than motor case or outlet pressure and may be as high as typical hydraulic system operating pressure.

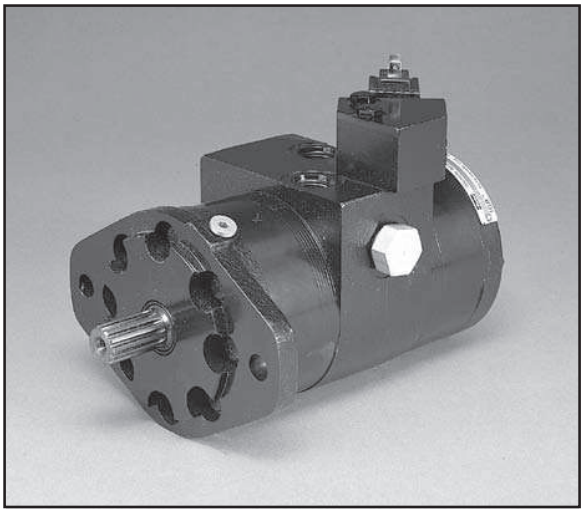

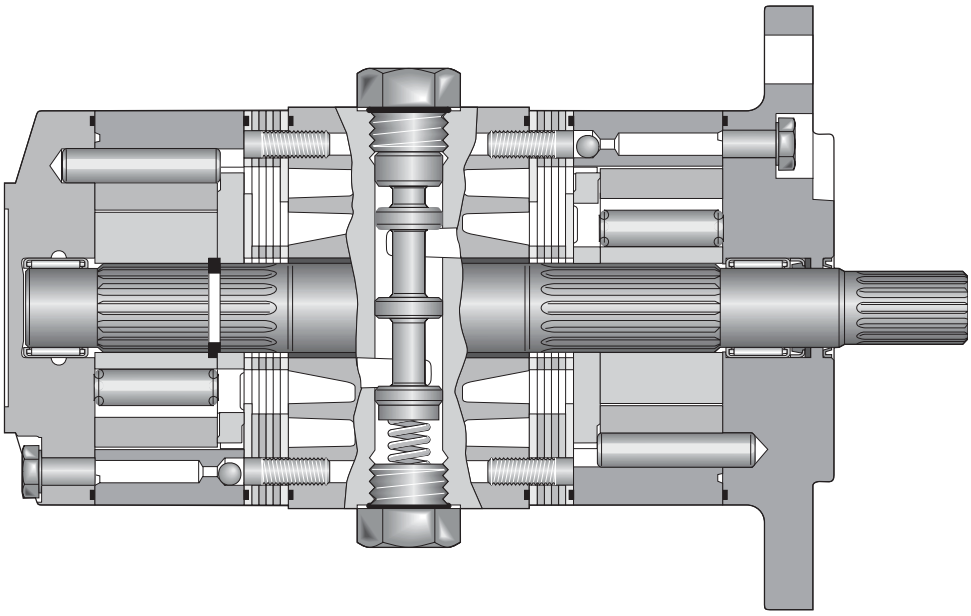

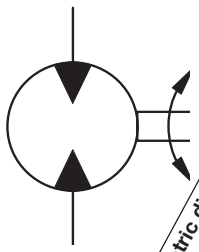

Motor Series 700	Geometric displacement Geom. Schluckvolumen Cylindrée Cilindrata	Max. speed @ Max. intermittent flow Max. Drehzahl Intermittierender Betrieb: Vitesse de rotation maxi Velocidad maxima a caudal intermitente maximo	Max. oil flow Max. Schluckstrom Débit d'huile maxi Portata max		Max. differential pressure Max. Druckgefälle Chute de pression maxi Presion diferencial maxima		Max. supply pressure Max. Eingangsdruck Pression maxi entrée Presion maxima de alimentacion	Max. torque Max. Drehmoment Couple maxi Torque Maximo		Max. performance Max. Leistungabgabe Puissance de sortie maxi Maximo rendimento
	cm³/rev in³/rev	***int*** rev/min	***cont / int*** **l/min** g/min		***cont / int*** **bar** psid		***max*** **bar** psig	***cont / int*** **Nm** lb-in		***max*** **KW** HP
072 Series	**59** 3.6	890	**45.4** 12	**53.0** 14	**170** 2500	**210** 3000	**276** 4000	**129** 1146	**154** 1366	**8.6** 11.5
072 Parallel	**118** 7.2	782	**83.3** 22	**94.6** 25	**170** 2500	**210** 3000	**276** 4000	**264** 2338	**309** 2739	**15.5** 20.8
108 Series	**88** 5.4	843	**60.6** 16	**68.1** 18	**170** 2500	**210** 3000	**276** 4000	**197** 1743	**236** 2088	**12.4** 16.6
108 Parallel	**177** 10.8	656	**94.6** 30	**113.5** 30	**140** 2000	**170** 2500	**276** 4000	**422** 3735	**527** 4666	**22.2** 29.8
142 Series	**116** 7.1	695	**75.7** 20	**83.3** 22	**170** 2500	**210** 3000	**276** 4000	**260** 2306	**313** 2769	**12.8** 17.2
142 Parallel	**233** 14.2	481	**113.5** 30	**113.5** 30	**100** 1500	**140** 2000	**276** 4000	**314** 2780	**418** 3699	**12.8** 17.2
176 Series	**144** 8.8	688	**75.7** 20	**94.6** 25	**170** 2500	**210** 3000	**276** 4000	**325** 2818	**392** 3472	**14.1** 19.0
176 Parallel	**288** 17.6	419	**113.5** 30	**113.5** 30	**85** 1250	**100** 1500	**276** 4000	**321** 2843	**386** 3423	**11.1** 14.9
212 Series	**174** 10.6	580	**75.7** 20	**94.6** 25	**155** 2250	**190** 2750	**276** 4000	**353** 3125	**434** 3844	**12.9** 17.3
212 Parallel	**347** 21.2	352	**113.5** 30	**113.5** 30	**85** 1250	**100** 1500	**276** 4000	**385** 3407	**464** 4107	**11.3** 15.2
258 Series	**211** 12.9	440	**68.1** 18	**94.6** 25	**120** 1750	**155** 2250	**276** 4000	**332** 2926	**431** 3816	**8.8** 11.8
258 Parallel	**423** 25.8	268	**113.5** 30	**113.5** 30	**70** 1000	**85** 1250	**276** 4000	**371** 3285	**467** 4134	**7.8** 10.5

Performance data based on tests using 15W40 oil with a viscosity of 55 cSt (215 SUS) at 54° C (130° F.) Performance data is typical. Actual data may vary slightly from one production motor to another.

Les donnees sur les performances sont basees sur des tests utilisant de l'huile 15W40 d'une viscosite de 55 cSt (215 SUS) a 54°C (130°F). Ces donnees correspondent a des situations typiques. Les donnees reelles peuvent varier legerement d'un moteur de production a l'autre.

Leistugsdaten sind gemessen mit SAE 15W40 bei einer Viskositaet von 43,1 Cst beo 54°C. Geringfuegige Abweichungen von den Katalogerten sond moeglich.

Datos tecnicos obtenidos con aceite 15W40 de 55 cSt (215 SUS) de viscosidad a 54°C (130°F). Los datos proporcionados son valores tipcos. Los valores exactos reales podrian tener una pequena variacion entre distintos motores.

* Intermittent operation rating applies to 10% of every minute.
Intermittierende Werte maximal 10% von jeder Betriebsminute.
Fonctionnement interm. 10% max. de chaque minute d`utilisation.
Capacidad de funcionamiento intermitente valida para 10% por cada minuto.

7	1	6	-	XXX	-	BS	-	X	-	X X X	-	X
Series	Series	Shaft Welle Arbre Ejes		Displacement Schluckvolumen Cylindrée Desplazamiento		Mounting/Ports Gehäuse/Anschluß Carter/Plan de raccordement Montaje/Lumbreras		Thru-Shaft durchgehende Welle arbre traversant Eje pasante		Spool Actuation Spulenbetätigung Actionnement de la bobine Actuado por bobina Normal Center Position[1] Normale Mittenposition Position centrale normale Posición central normal Normal Mode of Operation[4] Normaler Betriebsmodus Mode opératoire normal Modo normal de operación		Paint Anstrich Peinture Pintura

Code	
6	7/8"-13 Tooth Spline 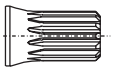

Code	
BS	SAE B 2-Bolt, 7/8"-14 SAE 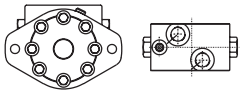

Code	cm³/U cm³/tr cm³/giro	in³/rev
072	60 /	3.6 Series
	119 /	7.2 Parallel
108	88 /	5.4 Series
	176 /	10.8 Parallel
142	116 /	71.1 Series
	232 /	14.2 Parallel
176	144 /	8.8 Series
	289 /	17.6 Parallel
212	174 /	10.6 Series
	348 /	21.2 Parallel
258	211 /	12.9 Series
	423 /	25.8 Parallel

Code	
0	No Thru Shaft
1	Thru Shaft
E	Encoder

Code	
PCL	Remotely Piloted, Closed, Parallel 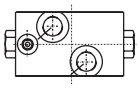
SOL[1]	Solenoid Actuated with Manual Override, Open, Parallel 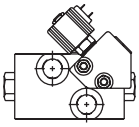
NOL[1]	Solenoid Actuated without Manual Override, Open, Parallel 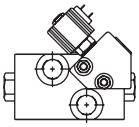

[1]Standard Solenoid is 12V DC with 1/4" Spade Connections.
Standardausführung ist ein 12-V-Gleichstrom-Solenoid mit 1/4-Zoll-Gabelschuhanschlüssen.
Le solénoïde standardisé est du type 12 Vcc avec cosses à fourche de 1/4".
La solenoide estándar es para 12 VCC, con conectores tipo bayoneta de 1/4".

Code	
Omit	No Paint
F	Black Paint Schwarz lackiert

Consult factory for other available options, configurations ordering codes and lead times.

Parker Hannifin Corporation
Hydraulic Pump/Motor Division
Greeneville, Tennessee, USA

072 Series

3.6 cu in / rev

PRESSURE (PSID)

FLOW (GPM)	500	1000	1500	2000	2500	3000	3500
2	242 **128**	481 **127**	718 **119**	941 **107**	1143 **88**	1313 **70**	
4	240 **257**	476 **256**	695 **255**	961 **239**	1193 **219**	1399 **194**	1574 **157**
6	217 **385**	449 **384**	697 **382**	947 **378**	1189 **357**	1420 **329**	1606 **289**
8	187 **513**	421 **512**	670 **513**	910 **511**	1155 **492**	1384 **467**	1610 **418**
10	139 **642**	372 **640**	618 **641**	867 **638**	1116 **628**	1361 **599**	1534 **553**
12	74 **770**	307 **770**	553 **768**	818 **768**	1056 **756**	1275 **708**	1496 **671**
14		240 **898**	486 **898**	754 **897**	994 **882**	1191 **847**	1448 **798**

TORQUE (LB IN) 994
SPEED (RPM) 882

59 cc / rev

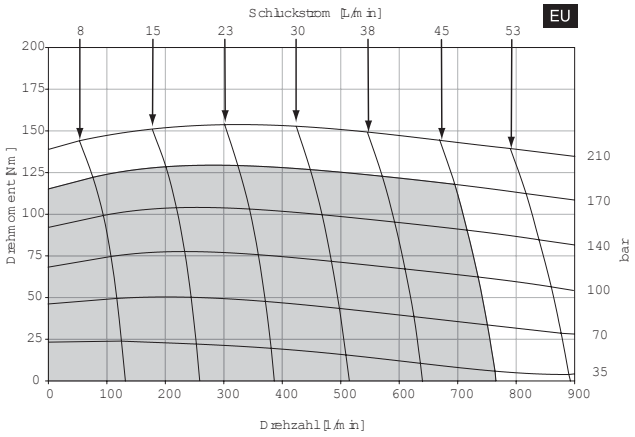

Cont. Int.

Intermittent operation rating applies to 10% of every minute.

Fonctionnement interm. 10% max. de chaque minute d`utilisation.

Intermittierende Werte maximal 10% von jeder Betriebsminute.

Capacidad de funcionamiento intermitente valida para 10% por cada minuto.

Performance data based on tests using 15W40 oil with a viscosity of 55 cSt (215 SUS) at 54° C (130° F.) Performance data is typical. Actual data may vary slightly from one production motor to another.

Les donnees sur les performances sont basees sur des tests utilisant de l'huile 15W40 d'une viscosite de 55 cSt (215 SUS) a 54°C (130°F). Ces donnees correspondent a des situations typiques. Les donnees reelles peuvent varier legerement d'un moteur de production a l'autre.

Leistugsdaten sind gemessen mit SAE 15W40 bei einer Viskositaet von 43,1 Cst beo 54°C. Geringfuegige Abweichungen von den Katalogerten sond moeglich.

Datos tecnicos obtenidos con aceite 15W40 de 55 cSt (215 SUS) de viscosidad a 54°C (130°F). Los datos proporcionados son valores tipcos. Los valores exactos reales podrian tener una pequena variacion entre distintos motores.

072 Parallel

7.2 cu in / rev

PRESSURE (PSID)

	500	1000	1500	2000	2500	3000	3500
2	441 **63**	889 **59**	1272 **48**	1650 **29**			
4	481 **128**	966 **125**	1403 **121**	1824 **104**	2163 **81**		
6	477 **192**	957 **187**	1401 **181**	1813 **159**	2186 **121**	2485 **67**	
8	464 **257**	964 **251**	1428 **244**	1850 **212**	2249 **161**	2578 **90**	
10	437 **321**	941 **320**	1427 **316**	1836 **283**	2243 **240**	2620 **178**	2968 **115**
12	419 **385**	913 **382**	1401 **377**	1833 **353**	2229 **309**	2589 **249**	2960 **174**
14	405 **449**	881 **448**	1384 **444**	1824 **420**	2220 **372**	2582 **300**	2952 **235**
16	395 **513**	858 **510**	1363 **503**	1801 **485**	2192 **438**	2571 **356**	2940 **280**
18	381 **577**	821 **576**	1327 **573**	1769 **553**	2183 **495**	2520 **414**	2931 **334**
20	369 **642**	799 **642**	1308 **641**	1772 **616**	2146 **578**	2513 **507**	2904 **405**
22	350 **706**	779 **706**	1272 **705**	1742 **678**	2114 **608**	2503 **534**	2884 **452**
25		710 **802**	1169 **801**	1604 **770**	1997 **691**	2314 **606**	2647 **513**

TORQUE (LB IN) 2647
SPEED (RPM) 513

FLOW (GPM)

118 cc / rev

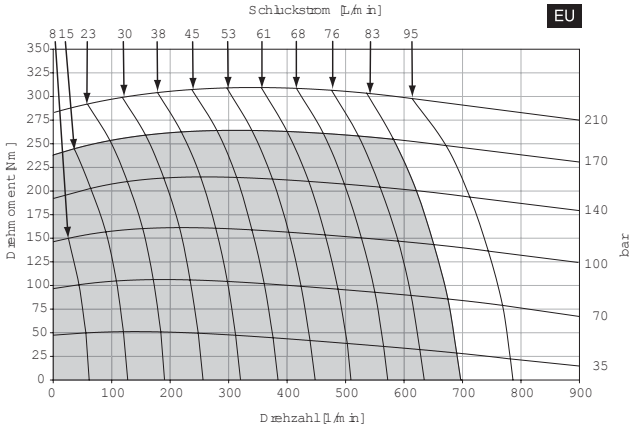

Cont. Int.

Intermittent operation rating applies to 10% of every minute.

Fonctionnement interm. 10% max. de chaque minute d`utilisation.

Performance data based on tests using 15W40 oil with a viscosity of 55 cSt (215 SUS) at 54° C (130° F.) Performance data is typical. Actual data may vary slightly from one production motor to another.

Les donnees sur les performances sont basees sur des tests utilisant de l'huile 15W40 d'une viscosite de 55 cSt (215 SUS) a 54°C (130°F). Ces donnees correspondent a des situations typiques. Les donnees reelles peuvent varier legerement d'un moteur de production a l'autre.

Intermittierende Werte maximal 10% von jeder Betriebsminute.

Capacidad de funcionamiento intermitente valida para 10% por cada minuto.

Leistugsdaten sind gemessen mit SAE 15W40 bei einer Viskositaet von 43,1 Cst beo 54°C. Geringfuegige Abweichungen von den Katalogerten sond moeglich.

Datos tecnicos obtenidos con aceite 15W40 de 55 cSt (215 SUS) de viscosidad a 54°C (130°F). Los datos proporcionados son valores tipcos. Los valores exactos reales podrian tener una pequena variacion entre distintos motores.

108 Series

5.4 cu in / rev

PRESSURE (PSID)

	500	1000	1500	2000	2500	3000	3500
2	366 **86**	727 **84**	1084 **80**	1431 **74**	1740 **62**	2036 **52**	
4	361 **171**	725 **171**	1071 **170**	1462 **163**	1816 **150**	2122 **135**	2424 **110**
6	329 **257**	690 **256**	1066 **255**	1443 **252**	1812 **242**	2159 **224**	2455 **200**
8	289 **342**	654 **341**	1029 **342**	1395 **340**	1764 **330**	2118 **317**	2463 **288**
10	229 **428**	593 **427**	968 **427**	1337 **425**	1712 **419**	2078 **406**	2375 **379**
12	151 **513**	509 **513**	882 **512**	1271 **511**	1636 **505**	1979 **481**	2324 **459**
14	77 **599**	426 **599**	800 **598**	1194 **596**	1552 **588**	1874 **571**	2253 **547**
16	40 **684**	342 **684**	720 **683**	1133 **680**	1469 **671**	1790 **649**	2146 **656**
18		259 **769**	627 **769**	1031 **765**	1339 **755**	1642 **738**	1961 **731**
20			536 **855**	858 **850**	1139 **845**	1407 **817**	1678 **788**
22			452 **940**	775 **935**	1031 **930**	1277 **899**	1532 **867**

FLOW (GPM)

TORQUE (LB IN) 1678
SPEED (RPM) 788

88 cc / rev

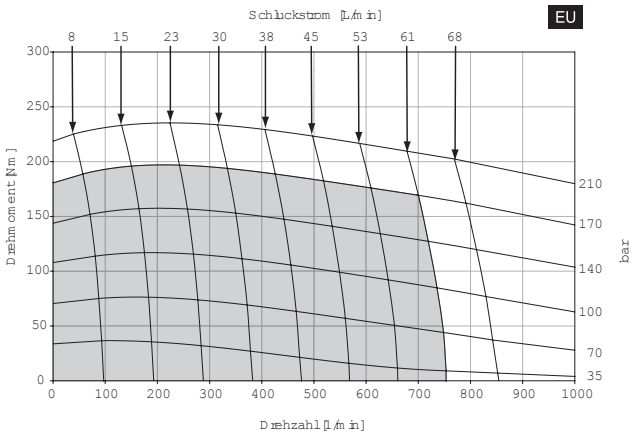

Cont. Int.

Intermittent operation rating applies to 10% of every minute.

Fonctionnement interm. 10% max. de chaque minute d`utilisation.

Performance data based on tests using 15W40 oil with a viscosity of 55 cSt (215 SUS) at 54° C (130° F.) Performance data is typical. Actual data may vary slightly from one production motor to another.

Les donnees sur les performances sont basees sur des tests utilisant de l'huile 15W40 d'une viscosite de 55 cSt (215 SUS) a 54°C (130°F). Ces donnees correspondent a des situations typiques. Les donnees reelles peuvent varier legerement d'un moteur de production a l'autre.

Intermittierende Werte maximal 10% von jeder Betriebsminute.

Capacidad de funcionamiento intermitente valida para 10% por cada minuto.

Leistugsdaten sind gemessen mit SAE 15W40 bei einer Viskositaet von 43,1 Cst beo 54°C. Geringfuegige Abweichungen von den Katalogerten sond moeglich.

Datos tecnicos obtenidos con aceite 15W40 de 55 cSt (215 SUS) de viscosidad a 54°C (130°F). Los datos proporcionados son valores tipcos. Los valores exactos reales podrian tener una pequena variacion entre distintos motores.

108 Parallel

10.8 cu in / rev

PRESSURE (PSID)

FLOW (GPM)	500	1000	1500	2000
2	683 **42**	1366 **40**	1970 **33**	
4	729 **85**	1455 **83**	2140 **78**	2809 **65**
6	728 **128**	1465 **124**	2150 **120**	2801 **105**
8	711 **171**	1469 **168**	2185 **163**	2856 **142**
10	678 **214**	1442 **213**	2182 **211**	2838 **189**
12	651 **257**	1401 **254**	2150 **252**	2833 **235**
14	630 **299**	1362 **298**	2104 **295**	2814 **280**
16	611 **342**	1329 **340**	2095 **335**	2778 **323**
18	587 **385**	1295 **383**	2051 **379**	2756 **368**
20	565 **428**	1250 **426**	2013 **425**	2723 **411**
22	539 **469**	1215 **469**	1962 **467**	2678 **452**
25		1123 **534**	1834 **532**	2515 **513**
30		1037 **641**	1693 **639**	2313 **615**

TORQUE (LB IN) 2515
SPEED (RPM) 513

177 cc / rev

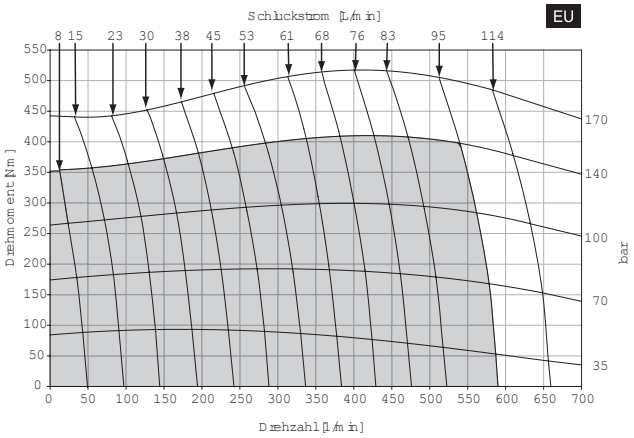

Cont. Int.

Intermittent operation rating applies to 10% of every minute.

Fonctionnement interm. 10% max. de chaque minute d`utilisation.

Performance data based on tests using 15W40 oil with a viscosity of 55 cSt (215 SUS) at 54° C (130° F.) Performance data is typical. Actual data may vary slightly from one production motor to another.

Les donnees sur les performances sont basees sur des tests utilisant de l'huile 15W40 d'une viscosite de 55 cSt (215 SUS) a 54°C (130°F). Ces donnees correspondent a des situations typiques. Les donnees reelles peuvent varier legerement d'un moteur de production a l'autre.

Intermittierende Werte maximal 10% von jeder Betriebsminute.

Capacidad de funcionamiento intermitente valida para 10% por cada minuto.

Leistugsdaten sind gemessen mit SAE 15W40 bei einer Viskositaet von 43,1 Cst beo 54°C. Geringfuegige Abweichungen von den Katalogerten sond moeglich.

Datos tecnicos obtenidos con aceite 15W40 de 55 cSt (215 SUS) de viscosidad a 54°C (130°F). Los datos proporcionados son valores tipcos. Los valores exactos reales podrian tener una pequena variacion entre distintos motores.

142 Series

7.1 cu in / rev

PRESSURE (PSID)

	500	1000	1500	2000	2500	3000	3500
2	484 **65**	964 **64**	1434 **62**	1907 **58**	2319 **50**	2759 **43**	
4	474 **130**	968 **130**	1444 **130**	1948 **126**	2410 **118**	2819 **107**	3264 **87**
6	438 **195**	930 **195**	1428 **194**	1926 **192**	2417 **1987**	2875 **174**	3285 **158**
8	391 **260**	889 **260**	1381 **260**	1870 **259**	2359 **253**	2838 **245**	3298 **226**
10	327 **325**	821 **324**	1324 **324**	1804 **323**	2298 **320**	2776 **313**	3215 **295**
12	249 **390**	728 **390**	1226 **390**	1725 **388**	2217 **385**	2664 **372**	3092 **358**
14	184 **455**	643 **455**	1141 **454**	1648 **452**	2116 **447**	2573 **439**	3063 **427**
16	101 **520**	532 **520**	1040 **519**	1558 **516**	2011 **511**	2474 **501**	2949 **497**
18		439 **585**	930 **584**	1441 **581**	1876 **575**	2325 **564**	2790 **559**
20		300 **651**	810 **650**	1275 **647**	1712 **643**	2125 **629**	2535 **612**
22		249 **716**	707 **715**	1169 **711**	1594 **707**	1983 **692**	2386 **673**

FLOW (GPM)

TORQUE (LB IN) 2535
SPEED (RPM) 612

116 cc / rev

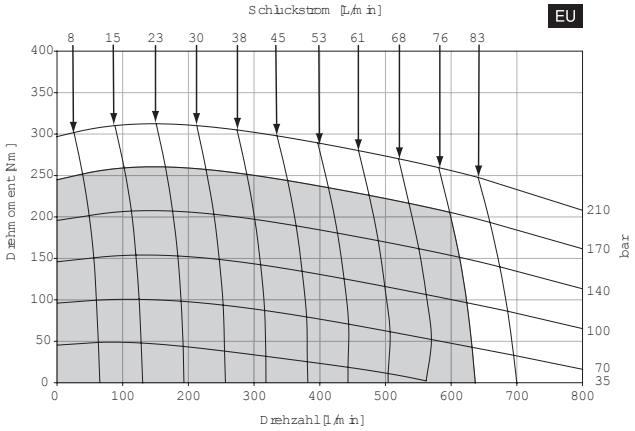

Cont. Int.

Intermittent operation rating applies to 10% of every minute.

Fonctionnement interm. 10% max. de chaque minute d`utilisation.

Performance data based on tests using 15W40 oil with a viscosity of 55 cSt (215 SUS) at 54° C (130° F.) Performance data is typical. Actual data may vary slightly from one production motor to another.

Les donnees sur les performances sont basees sur des tests utilisant de l'huile 15W40 d'une viscosite de 55 cSt (215 SUS) a 54°C (130°F). Ces donnees correspondent a des situations typiques. Les donnees reelles peuvent varier legerement d'un moteur de production a l'autre.

Intermittierende Werte maximal 10% von jeder Betriebsminute.

Capacidad de funcionamiento intermitente valida para 10% por cada minuto.

Leistugsdaten sind gemessen mit SAE 15W40 bei einer Viskositaet von 43,1 Cst beo 54°C. Geringfuegige Abweichungen von den Katalogerten sond moeglich.

Datos tecnicos obtenidos con aceite 15W40 de 55 cSt (215 SUS) de viscosidad a 54°C (130°F). Los datos proporcionados son valores tipcos. Los valores exactos reales podrian tener una pequena variacion entre distintos motores.

142 Parallel

14.2 cu in / rev

PRESSURE (PSID)

FLOW (GPM)	500	1000	1500
2	925 **32**	1836 **31**	2668 **26**
4	969 **65**	1920 **63**	2860 **57**
6	971 **97**	1963 **94**	2886 **90**
8	954 **130**	1962 **128**	2927 **125**
10	918 **163**	1933 **162**	2921 **160**
12	884 **195**	1882 **193**	2886 **191**
14	857 **228**	1841 **226**	2831 **224**
16	826 **260**	1799 **259**	2816 **255**
18	790 **293**	1754 **290**	2755 **286**
20	757 **325**	1709 **323**	2710 **322**
22	726 **356**	1655 **356**	2648 **353**
25	452 **406**	1547 **405**	2513 **403**
30	374 **488**	1436 **486**	2344 **484**

TORQUE (LB IN) 2513
SPEED (RPM) 403

233 cc / rev

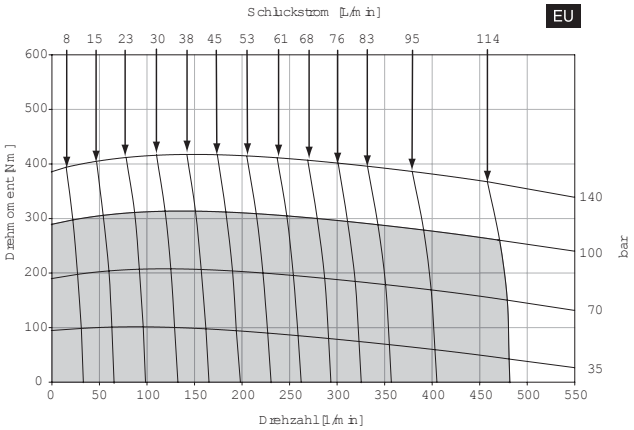

Cont. Int.

Intermittent operation rating applies to 10% of every minute.

Fonctionnement interm. 10% max. de chaque minute d`utilisation.

Performance data based on tests using 15W40 oil with a viscosity of 55 cSt (215 SUS) at 54° C (130° F.) Performance data is typical. Actual data may vary slightly from one production motor to another.

Les donnees sur les performances sont basees sur des tests utilisant de l'huile 15W40 d'une viscosite de 55 cSt (215 SUS) a 54°C (130°F). Ces donnees correspondent a des situations typiques. Les donnees reelles peuvent varier legerement d'un moteur de production a l'autre.

Intermittierende Werte maximal 10% von jeder Betriebsminute.

Capacidad de funcionamiento intermitente valida para 10% por cada minuto.

Leistugsdaten sind gemessen mit SAE 15W40 bei einer Viskositaet von 43,1 Cst beo 54°C. Geringfuegige Abweichungen von den Katalogerten sond moeglich.

Datos tecnicos obtenidos con aceite 15W40 de 55 cSt (215 SUS) de viscosidad a 54°C (130°F). Los datos proporcionados son valores tipcos. Los valores exactos reales podrian tener una pequena variacion entre distintos motores.

176 Series

8.8 cu in / rev

PRESSURE (PSID)

	500	1000	1500	2000	2500
2	604 **52**	1204 **52**	1788 **50**	2395 **49**	2913 **43**
4	588 **105**	1217 **105**	1834 **105**	2445 **104**	3022 **98**
6	548 **158**	1179 **157**	1803 **157**	2423 **155**	3039 **153**
8	497 **210**	1137 **209**	1748 **210**	2364 **208**	2973 **206**
10	436 **263**	1070 **262**	1704 **261**	2291 **260**	2906 **259**
12	371 **315**	976 **315**	1601 **315**	2204 **313**	2829 **311**
14	332 **367**	899 **367**	1525 **366**	2140 **363**	2717 **361**
16	186 **420**	762 **419**	1405 **418**	2017 **416**	2591 **413**
18		665 **472**	1284 **471**	1891 **468**	2468 **465**
20		553 **524**	1134 **524**	1762 **522**	2388 **519**
22		459 **576**	1017 **576**	1636 **574**	2272 **571**
25		81 **655**	721 **655**	1375 **652**	1968 **648**
30			284 **786**	958 **782**	1562 **778**

FLOW (GPM)

TORQUE (LB IN) 2272
SPEED (RPM) 571

144 cc / rev

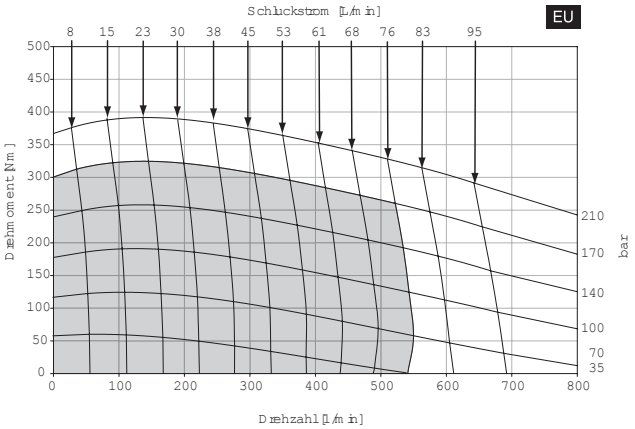

Cont. Int.

Intermittent operation rating applies to 10% of every minute.

Fonctionnement interm. 10% max. de chaque minute d`utilisation.

Performance data based on tests using 15W40 oil with a viscosity of 55 cSt (215 SUS) at 54° C (130° F.) Performance data is typical. Actual data may vary slightly from one production motor to another.

Les donnees sur les performances sont basees sur des tests utilisant de l'huile 15W40 d'une viscosite de 55 cSt (215 SUS) a 54°C (130°F). Ces donnees correspondent a des situations typiques. Les donnees reelles peuvent varier legerement d'un moteur de production a l'autre.

Intermittierende Werte maximal 10% von jeder Betriebsminute.

Capacidad de funcionamiento intermitente valida para 10% por cada minuto.

Leistugsdaten sind gemessen mit SAE 15W40 bei einer Viskositaet von 43,1 Cst beo 54°C. Geringfuegige Abweichungen von den Katalogerten sond moeglich.

Datos tecnicos obtenidos con aceite 15W40 de 55 cSt (215 SUS) de viscosidad a 54°C (130°F). Los datos proporcionados son valores tipcos. Los valores exactos reales podrian tener una pequena variacion entre distintos motores.

176 Parallel

17.6 cu in / rev

PRESSURE (PSID)

	500	1000	1250
2	1179 **26**	2325 **26**	2836 **26**
4	1214 **52**	2412 **51**	3000 **51**
6	1221 **79**	2479 **75**	3042 **75**
8	1206 **105**	2468 **104**	3077 **104**
10	1172 **131**	2443 **130**	3070 **130**
12	1130 **157**	2381 **156**	3042 **156**
14	1097 **184**	2345 **182**	3010 **182**
16	1052 **210**	2294 **209**	3056 **209**
18	1003 **236**	2238 **233**	2906 **233**
20	955 **262**	2199 **260**	2864 **260**
22	922 **286**	2123 **286**	2805 **286**
25	832 **328**	2006 **326**	2700 **326**
30	689 **393**	1868 **392**	2542 **392**

FLOW (GPM)

TORQUE (LB IN) 2805
SPEED (RPM) 286

288 cc / rev

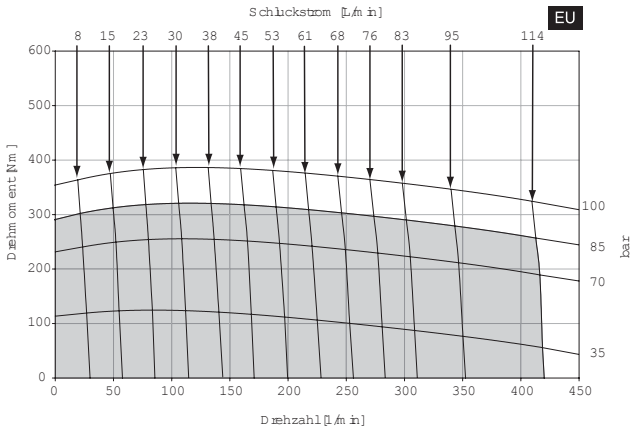

Cont. Int.

Intermittent operation rating applies to 10% of every minute.

Fonctionnement interm. 10% max. de chaque minute d`utilisation.

Performance data based on tests using 15W40 oil with a viscosity of 55 cSt (215 SUS) at 54° C (130° F.) Performance data is typical. Actual data may vary slightly from one production motor to another.

Les donnees sur les performances sont basees sur des tests utilisant de l'huile 15W40 d'une viscosite de 55 cSt (215 SUS) a 54°C (130°F). Ces donnees correspondent a des situations typiques. Les donnees reelles peuvent varier legerement d'un moteur de production a l'autre.

Intermittierende Werte maximal 10% von jeder Betriebsminute.

Capacidad de funcionamiento intermitente valida para 10% por cada minuto.

Leistugsdaten sind gemessen mit SAE 15W40 bei einer Viskositaet von 43,1 Cst beo 54°C. Geringfuegige Abweichungen von den Katalogerten sond moeglich.

Datos tecnicos obtenidos con aceite 15W40 de 55 cSt (215 SUS) de viscosidad a 54°C (130°F). Los datos proporcionados son valores tipcos. Los valores exactos reales podrian tener una pequena variacion entre distintos motores.

212 Series

10.6 cu in / rev

PRESSURE (PSID)

	500	1000	1500	1750	2000	2250
2	731 **44**	1458 **43**	2162 **42**	2509 **42**	2901 **40**	3175 **39**
4	712 **87**	1468 **87**	2210 **87**	2562 **87**	2946 **86**	3274 **84**
6	665 **131**	1426 **130**	2175 **130**	2553 **129**	2920 **128**	3290 **127**
8	603 **174**	1371 **174**	2110 **174**	2473 **173**	2854 **173**	3229 **171**
10	527 **218**	1287 **217**	2053 **217**	2406 **216**	2767 **215**	3136 **215**
12	450 **262**	1182 **261**	1935 **261**	2315 **260**	2665 **259**	3040 **258**
14	390 **305**	1089 **304**	1844 **303**	2210 **302**	2588 **301**	2940 **300**
16	225 **349**	929 **348**	1703 **347**	2076 **346**	2443 **346**	2789 **345**
18		806 **391**	1559 **391**	1921 **389**	2300 **389**	2672 **388**
20		669 **435**	1377 **435**	1769 **434**	2128 **433**	2498 **432**
22		567 **478**	1244 **478**	1612 **477**	1994 **476**	2337 **475**
25		153 **544**	900 **544**	1244 **543**	1676 **541**	2037 **540**
30			398 **653**	732 **651**	1183 **650**	1534 **648**

FLOW (GPM)

TORQUE (LB IN) 2337
SPEED (RPM) 475

174 cc / rev

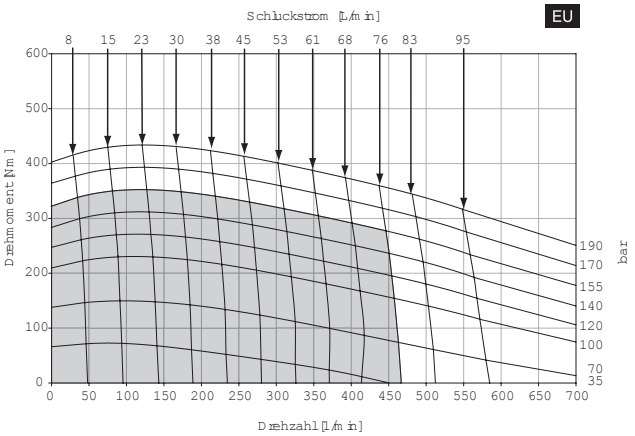

Cont. Int.

Intermittent operation rating applies to 10% of every minute.

Fonctionnement interm. 10% max. de chaque minute d`utilisation.

Performance data based on tests using 15W40 oil with a viscosity of 55 cSt (215 SUS) at 54° C (130° F.) Performance data is typical. Actual data may vary slightly from one production motor to another.

Les donnees sur les performances sont basees sur des tests utilisant de l'huile 15W40 d'une viscosite de 55 cSt (215 SUS) a 54°C (130°F). Ces donnees correspondent a des situations typiques. Les donnees reelles peuvent varier legerement d'un moteur de production a l'autre.

Intermittierende Werte maximal 10% von jeder Betriebsminute.

Capacidad de funcionamiento intermitente valida para 10% por cada minuto.

Leistugsdaten sind gemessen mit SAE 15W40 bei einer Viskositaet von 43,1 Cst beo 54°C. Geringfuegige Abweichungen von den Katalogerten sond moeglich.

Datos tecnicos obtenidos con aceite 15W40 de 55 cSt (215 SUS) de viscosidad a 54°C (130°F). Los datos proporcionados son valores tipcos. Los valores exactos reales podrian tener una pequena variacion entre distintos motores.

212 Parallel

21.2 cu in / rev

PRESSURE (PSID)

FLOW (GPM)	500	1000
2	1413 **22**	2789 **21**
4	1455 **44**	2874 **42**
6	1471 **65**	2970 **63**
8	1455 **87**	2964 **86**
10	1413 **109**	2938 **108**
12	1366 **131**	2871 **129**
14	1326 **153**	2827 **151**
16	1269 **174**	2767 **173**
18	1215 **196**	2699 **194**
20	1158 **218**	2656 **216**
22	1114 **240**	2572 **238**
25	1004 **272**	2439 **271**
30	831 **327**	2299 **325**

TORQUE (LB IN) 2439
SPEED (RPM) 271

347 cc / rev

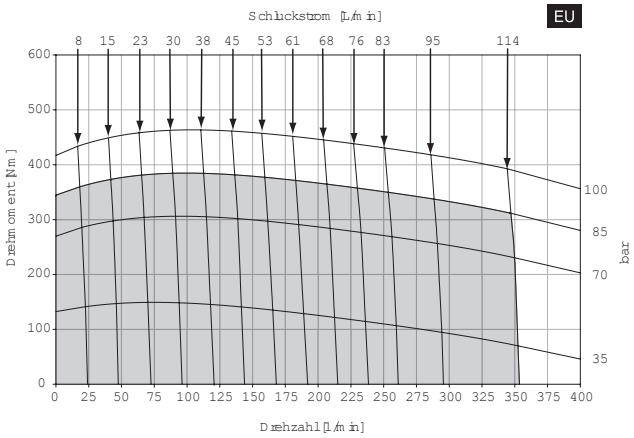

Cont. Int.

Intermittent operation rating applies to 10% of every minute.

Fonctionnement interm. 10% max. de chaque minute d`utilisation.

Intermittierende Werte maximal 10% von jeder Betriebsminute.

Capacidad de funcionamiento intermitente valida para 10% por cada minuto.

Performance data based on tests using 15W40 oil with a viscosity of 55 cSt (215 SUS) at 54° C (130° F.) Performance data is typical. Actual data may vary slightly from one production motor to another.

Les donnees sur les performances sont basees sur des tests utilisant de l'huile 15W40 d'une viscosite de 55 cSt (215 SUS) a 54°C (130°F). Ces donnees correspondent a des situations typiques. Les donnees reelles peuvent varier legerement d'un moteur de production a l'autre.

Leistugsdaten sind gemessen mit SAE 15W40 bei einer Viskositaet von 43,1 Cst beo 54°C. Geringfuegige Abweichungen von den Katalogerten sond moeglich.

Datos tecnicos obtenidos con aceite 15W40 de 55 cSt (215 SUS) de viscosidad a 54°C (130°F). Los datos proporcionados son valores tipcos. Los valores exactos reales podrian tener una pequena variacion entre distintos motores.

258 Series

12.9 cu in / rev

PRESSURE (PSID)

FLOW (GPM)	500	1000	1500	1750
2	905 **36**	1811 **36**	2673 **35**	3155 **35**
4	882 **72**	1799 **72**	2692 **71**	3147 **71**
6	834 **107**	1762 **107**	2645 **106**	3119 **106**
8	757 **143**	1675 **143**	2593 **142**	3036 **141**
10	652 **179**	1556 **178**	2504 **177**	2957 **176**
12	565 **215**	1472 **213**	2390 **212**	2867 **210**
14	423 **251**	1357 **249**	2279 **249**	2731 **248**
16	278 **287**	1187 **286**	2125 **286**	2587 **285**
18		1006 **321**	1962 **321**	2440 **319**
20		827 **357**	1728 **357**	2264 **356**
22		758 **393**	1614 **393**	2037 **392**
25		466 **446**	1260 **446**	1681 **446**
30			773 **537**	1099 **536**

TORQUE (LB IN) 1099
SPEED (RPM) 536

211 cc / rev

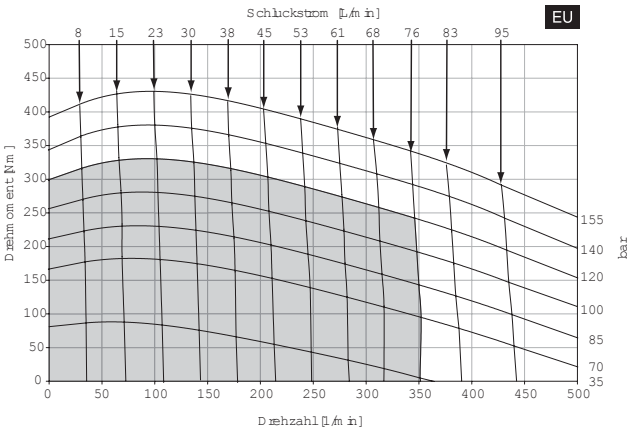

Cont. Int.

Intermittent operation rating applies to 10% of every minute.

Fonctionnement interm. 10% max. de chaque minute d`utilisation.

Intermittierende Werte maximal 10% von jeder Betriebsminute.

Capacidad de funcionamiento intermitente valida para 10% por cada minuto.

Performance data based on tests using 15W40 oil with a viscosity of 55 cSt (215 SUS) at 54° C (130° F.) Performance data is typical. Actual data may vary slightly from one production motor to another.

Les donnees sur les performances sont basees sur des tests utilisant de l'huile 15W40 d'une viscosite de 55 cSt (215 SUS) a 54°C (130°F). Ces donnees correspondent a des situations typiques. Les donnees reelles peuvent varier legerement d'un moteur de production a l'autre.

Leistugsdaten sind gemessen mit SAE 15W40 bei einer Viskositaet von 43,1 Cst beo 54°C. Geringfuegige Abweichungen von den Katalogerten sond moeglich.

Datos tecnicos obtenidos con aceite 15W40 de 55 cSt (215 SUS) de viscosidad a 54°C (130°F). Los datos proporcionados son valores tipcos. Los valores exactos reales podrian tener una pequena variacion entre distintos motores.

258 Parallel

25.8 cu in / rev

PRESSURE (PSID)

FLOW (GPM)	500	850
2	1679 **18**	2834 **16**
4	1731 **36**	2953 **35**
6	1790 **54**	3000 **53**
8	1782 **71**	3030 **71**
10	1727 **89**	3020 **88**
12	1684 **107**	2984 **106**
14	1636 **125**	2938 **124**
16	1556 **143**	2980 **143**
18	1515 **161**	2865 **160**
20	1445 **179**	2782 **178**
22	1378 **197**	2723 **196**
25	1234 **224**	2621 **223**
30	1018 **268**	2587 **268**

TORQUE (LB IN) 2621
SPEED (RPM) 223

423 cc / rev

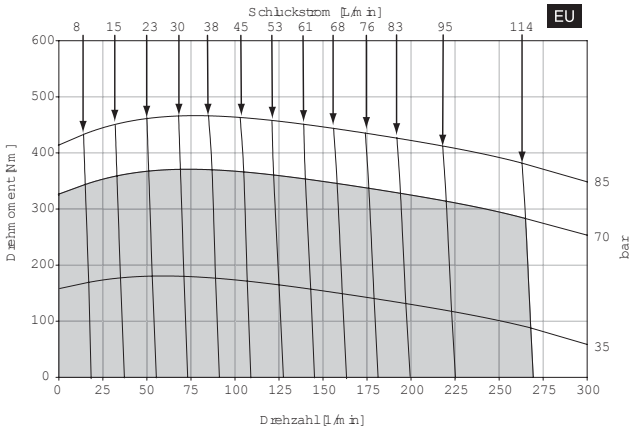

Cont. Int.

Intermittent operation rating applies to 10% of every minute.

Fonctionnement interm. 10% max. de chaque minute d`utilisation.

Performance data based on tests using 15W40 oil with a viscosity of 55 cSt (215 SUS) at 54° C (130° F.) Performance data is typical. Actual data may vary slightly from one production motor to another.

Les donnees sur les performances sont basees sur des tests utilisant de l'huile 15W40 d'une viscosite de 55 cSt (215 SUS) a 54°C (130°F). Ces donnees correspondent a des situations typiques. Les donnees reelles peuvent varier legerement d'un moteur de production a l'autre.

Intermittierende Werte maximal 10% von jeder Betriebsminute.

Capacidad de funcionamiento intermitente valida para 10% por cada minuto.

Leistugsdaten sind gemessen mit SAE 15W40 bei einer Viskositaet von 43,1 Cst beo 54°C. Geringfuegige Abweichungen von den Katalogerten sond moeglich.

Datos tecnicos obtenidos con aceite 15W40 de 55 cSt (215 SUS) de viscosidad a 54°C (130°F). Los datos proporcionados son valores tipcos. Los valores exactos reales podrian tener una pequena variacion entre distintos motores.

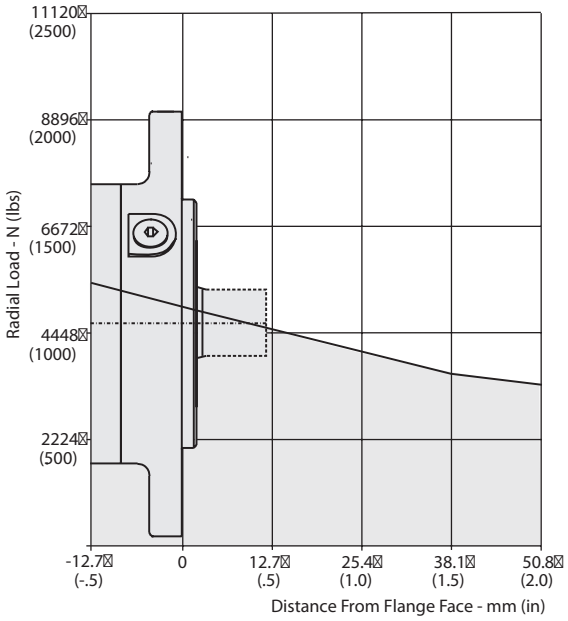

The allowable side load curve is based on a L_{10} bearing life of 2.5 x 10^6 revolutions.
Die zulassige radiale Wellenbelastung bezieht sich auf die Lager-Lebensdauer 2.5 x 10^6 Umdrehungen.
L'effort radial admissible sur l'arbre depend a une duree de vie 2.5 x 10^6 de rotation.
La curva de carga lateral admisible se basa en vida util de cojinete de 2.5 x 10^6 revoluciones.

Bearing Life Factor Curve
Chart B

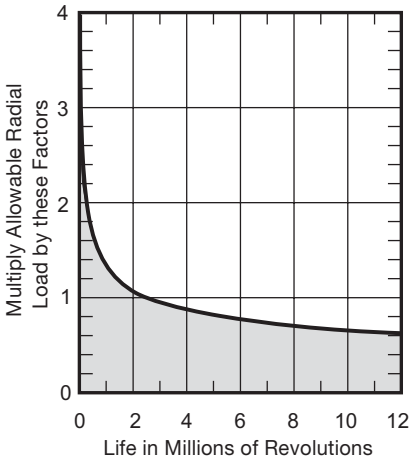

Note:
Side load should be considered a vector sum of all imposed loads.

Code: BS

SAE B, 7/8"-14 SAE

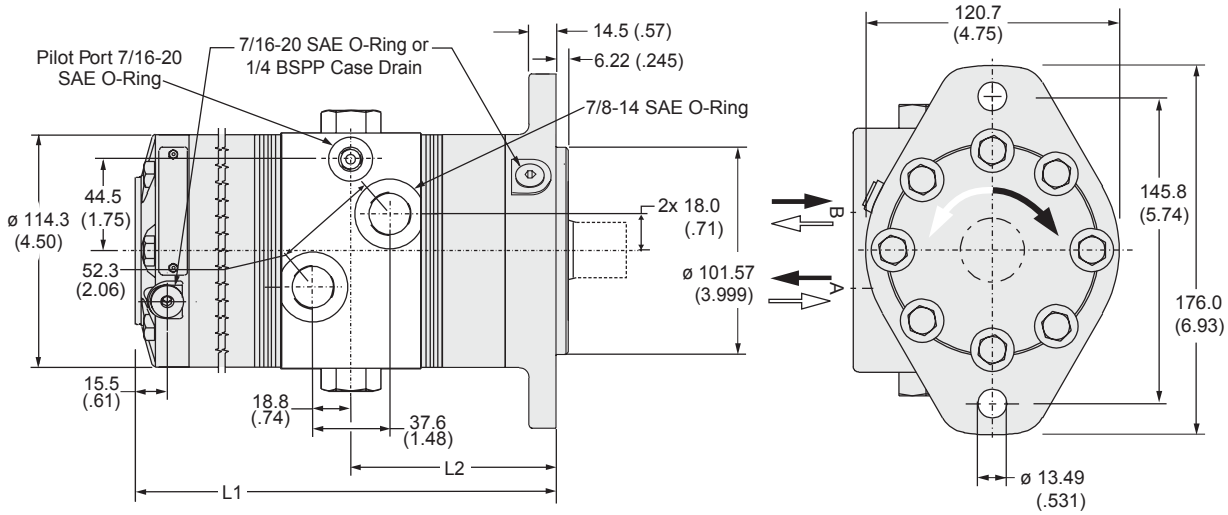

Code BS		072	108	142	176	212	258
Weight/Gewicht	**kg**	**14.8**	**15.2**	**15.4**	**15.6**	**15.7**	**15.9**
Poids/Peso	(lb)	(32.7)	(33.6)	(33.9)	(34.3)	(34.7)	(35.2)
Length	**"L1" mm**	**182.6**	**192.3**	**201.7**	**211.3**	**221.2**	**234.0**
	"L1" (in)	(7.18)	(7.57)	(7.94)	(8.32)	(8.71)	(9.21)
	"L2" mm	**91.4**	**96.3**	**101.8**	**105.7**	**110.7**	**117.1**
	"L2" (in)	(3.60)	(3.79)	(3.97)	(4.16)	(4.36)	(4.61)

English equivalents for metric specifications are shown in ( ).

Code: PCL

Remotely Piloted, Closed, Parallel

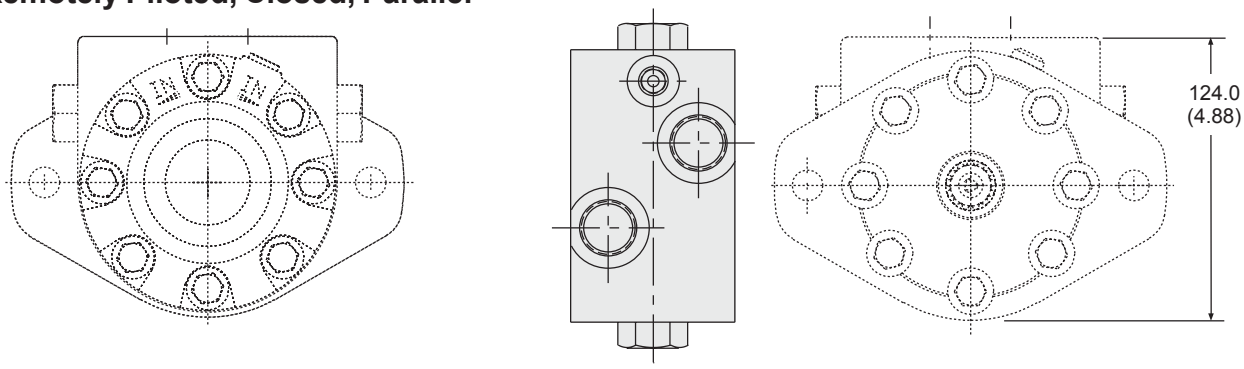

Code: NOL

Solenoid Actuated without Manual Override, Open, Parallel

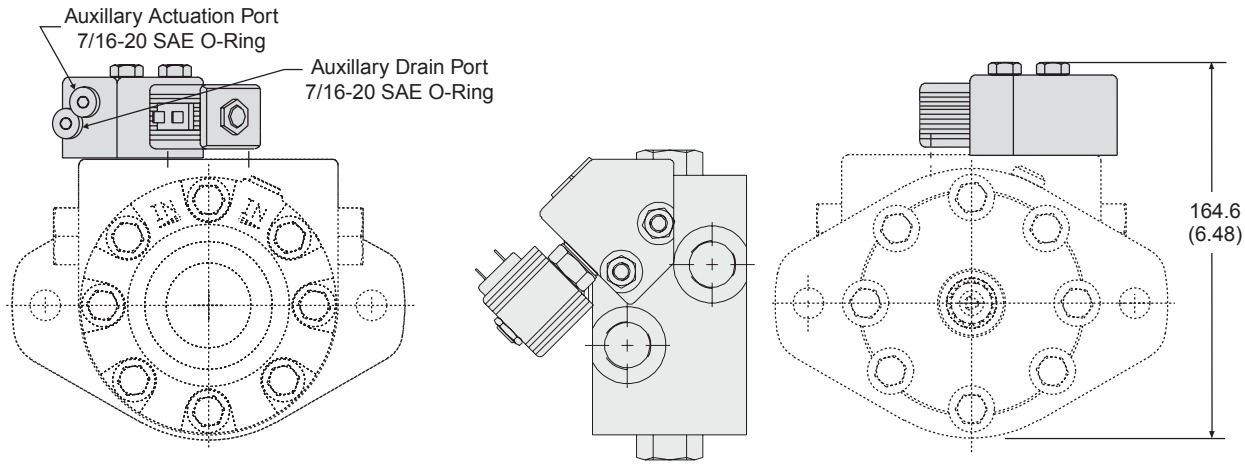

High Speed Series Mode

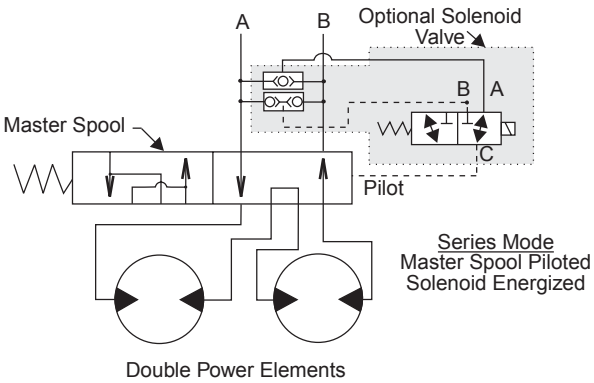

High Torque Parallel Mode

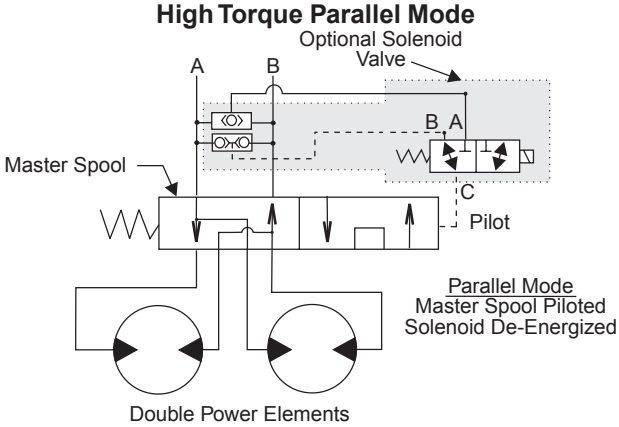

Add .5 kg (1.1 lb) for this option.

English equivalents for metric specifications are shown in ( ).

022 716.indd, js

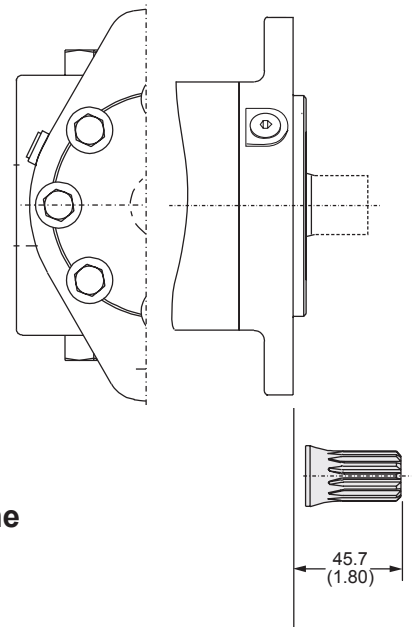

Code: 6

7/8"-13 Tooth Spline

Code: 6

7/8"-13 Tooth Spline

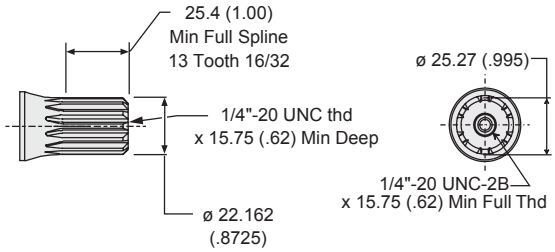

English equivalents for metric specifications are shown in ( ).

022 716.indd, js

Parker Hannifin Corporation
Hydraulic Pump/Motor Division
Greeneville, Tennessee, USA

Specifications

- **Rated flow** — 20 gpm
- **Max. Operating Pressure** — adjustable up to 3500 psi, factory preset at 1750 psi.
- **Reseat Pressure** — 90% of set pressure
- **Operating Temperature Range:** -40°F to 250°F
- **Cartridge Material** — All parts steel. All operating parts hardened steel.
- **Body Material** — Steel

Einsatzdaten

- Max. Fluß 76l/min.
- Max. Druck 240 bar (Voreinstellung 120 bar)
- Hysterese 90% des Öffnungsdrucks
- Betriebstemperatur –40°C bis 115°C
- Ventil in Stahlausführung
- Code für Ausführung schwarz grundiert

Consult factory for other available options, configurations ordering codes and lead times.

Spécifications

- **Débit nominal** – 75,7 litres/minute (20 gallons/minute)
- **Pressure de service maximale** – ajustable jusqu'à 246 kg/cm² (3 500 ppo²), préréglée à l'usine à 123 kg/cm² (1 750 ppo²).
- **Pression de rajustage** – 90% de la pression de consigne
- **Gamme des températures de service** – de – 40° C à 121° C (-40° F à 250° F).
- **Matériau de la cartouche** – Entièrement en acier. Toutes les pièces de service en acier durci.
- **Matériau du corps** – Acier

Especificaciones técnicas

- **Caudal:** 20 galones/minuto
- **Presión máxima de servicio:** regulable hasta 3.500 libras/pulg.². Regulada de fábrica a 1.750 libras/pulg.².
- **Presión de reasentamiento:** 90% de la presión calibrada.
- **Gama de temperatura de servicio:** - 40° F a 250° F
- **Material del cartucho:** todas las partes son de acero. Todas las partes activas son de acero templado.
- **Material del cuerpo:** acero

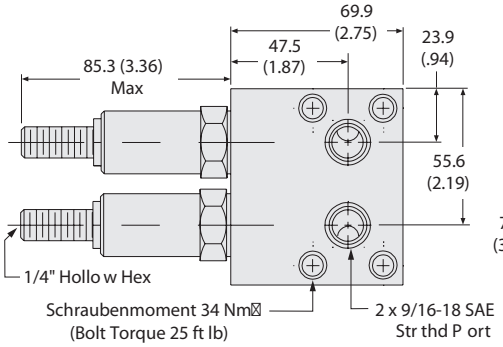

Top View

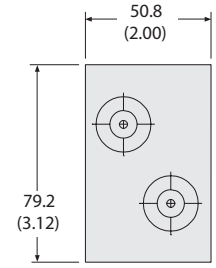

Rear View

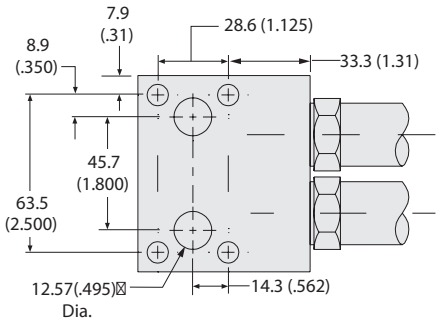

Bottom View

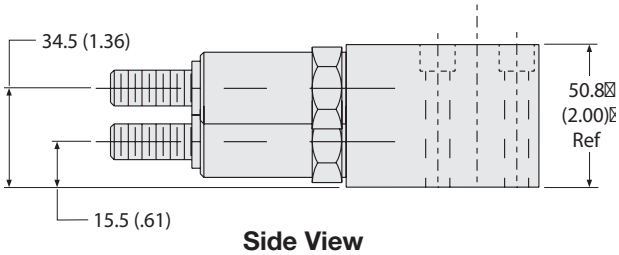

Side View

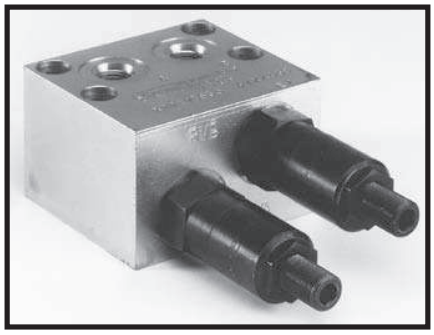

Performance Curve

Flow vs. Pressure

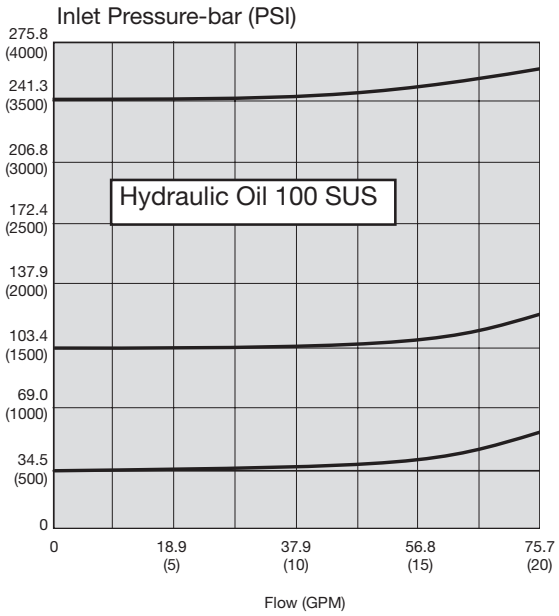

English equivalents for metric specifications are shown in ( ).

023 Nichols Options.indd, js

Parker Hannifin Corporation
Hydraulic Pump/Motor Division
Greeneville, Tennessee, USA

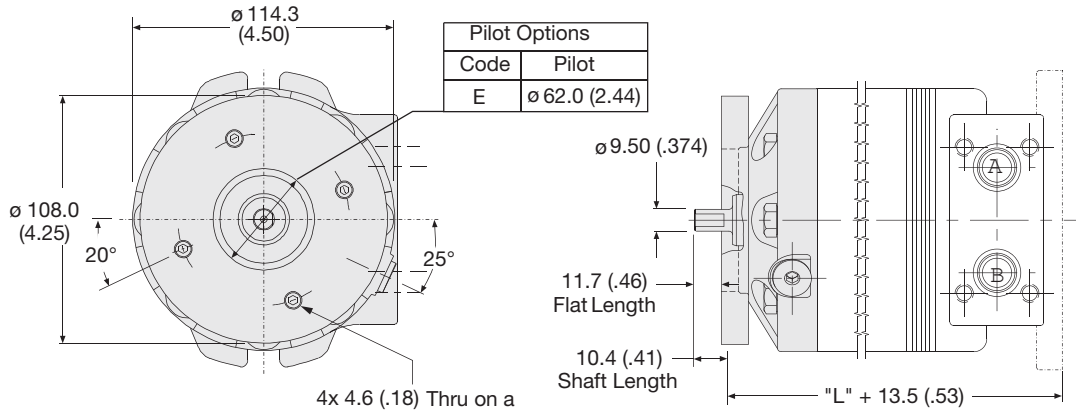

Pilot Options	
Code	Pilot
E	ø 62.0 (2.44)

Note:
To mount encoder, remove (4) socket head cap screws attaching rear encoder mounting plate to motor. Attach encoder and encoder mounting plate to motor using (4) longer socket head cap screws, furnished. Torque to 10 lb in.

Hinweis:
Zur Montage der Impulsscheibe zunächst die vier Sechskantkopfschrauben lösen, mit denen die hintere Impulsscheiben-Befestigungsplatte am Motor angeschraubt ist. Zum Anschrauben von Impulsscheibe und Impulsscheiben-Befestigungsplatte am Motor die bereitgestellten vier längeren Sechskantkopfschrauben verwenden. Maximal zulässiges Drehmoment: 1,13 Nm (10 lb in).

Remarque :
Pour monter l'encodeur, enlever les (4) vis à tête creuse qui retiennent la plaque de montage arrière de l'encodeur au moteur. Attacher l'encodeur et la plaque de montage de l'encodeur au moteur à l'aide des (4) longues vis à tête creuse fournies. Serrer jusqu'à 10 liv.po.

Nota:
Para montar el codificador, quitar los (4) tornillos de cabeza hueca que fijan la placa del codificador al motor. Fijar el codificador y la placa al motor, usando los (4) tornillos más largos que se suministran. Ajustarlos con un torque de 10 libras-pulgada.

Consult factory for other available options, configurations ordering codes and lead times.

Standard Length & Weights for 700 Series on Page 202-203, 716 Series on Page 216.
Längen/Gewichte 700 Serie siehe Seiten 202-203, 716 Serie siehe Seiten 216.
Longueurs et poids courants pour la série 700, voir les pages 202-203, série 716, voir les pages 216.
Los valores estándar de longitud y peso de la Serie 700 se puede ver en las Páginas 202-203, Serie 716 se puede ver en las Páginas 216.

English equivalents for metric specifications are shown in ( ).

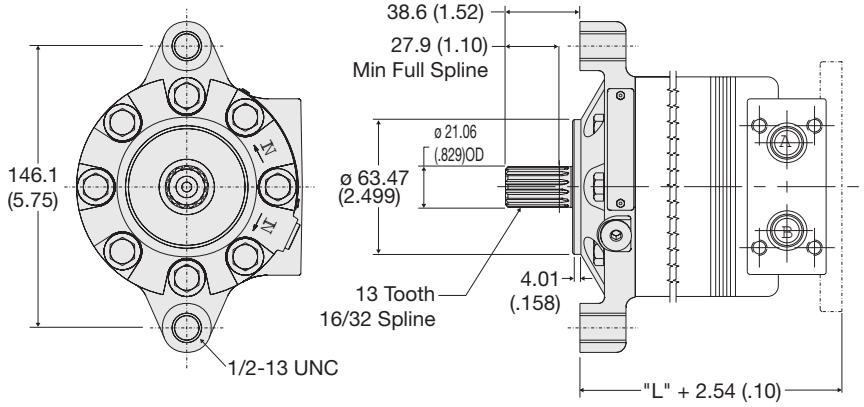

Note:
Torque Rating: Maximum torque should not exceed 339 Nm (3000 lb in) in dynamic on the thru-shaft. Consult factory if the radial load on the thru-shaft exceed 1780 N (400 lb).

Hinweis:
Drehmoment-Grenzwert: Das statische Drehmoment auf die durchgehende Welle darf höchstens 339 Nm (3000 lb in) betragen. Wenn die radiale Querbelastung auf die durchgehende Welle größer als 1780 N (400 lb) ist, vom Herstellerwerk beraten lassen.

Remarque :
Couple: Le couple maximal ne devrait pas dépasser 339 Nm (3000 liv. po.) dynamique sur l'arbre traversant. Consulter l'usine si la charge radiale sur l'arbre traversant dépasse 1780 N (400 livres).

Nota:
Valor de torque: el torque máximo en el eje pasante no debe superar 339 N-m (3000 libras-pulgada) dinámico. Si la carga radial sobre el eje pasante superara 1780 N (400 libras), consultar a fábrica.

⚠ WARNING
If torque on the thru-shaft exceeds 339 Nm (3000 lb in) when attempting to dynamically brake a load, the thru-shaft splines and/or shaft could fail and all braking action could be lost.

⚠ WARNUNG
Wenn beim Versuch, die Last dynamisch abzubremsen, das Drehmoment auf die Welle größer als 339 Nm (3000 lb in) wird, können die Keilwellenverbindung und/oder die Welle versagen und alle Bremswirkung verloren gehen.

⚠ AVERTISSEMENT
Si le couple sur l'arbre traversant dépasse 339 Nm (3000 liv. po.) au moment d'essayer le freinage dynamique d'une charge, les cannelures de l'arbre traversant et/ou l'arbre pourraient échouer et toute action de freinage pourrait être perdue.

⚠ ADVERTENCIA
Si el torque en el eje pasante superara 339 N-m (3000 libras-pulgada) al intentar frenar una carga dinámicamente, las estrías del eje o el mismo eje podrían fallar, perdiéndose la acción de frenado.

Standard Length & Weights for 110A Series on Pages 187-189.
Längen/Gewichte 110A Serie siehe Seiten 187-189.
Longueurs et poids courants pour la série 110A, voir les pages 187-189.
Los valores estándar de longitud y peso de la Serie 110A se puede ver en las Páginas 187-189.

Consult factory for other available options, configurations ordering codes and lead times.

English equivalents for metric specifications are shown in ( ).

Stainless Steel Shaft
Encoder Mount Standard, 2.44 Pilot
External Relief Valve - adjustable up to 3500 psi, factory preset at 1750 psi.
Thru Shaft with Brake Mount
Consult Factory for Other Positions

* To order crossover relief valve mounted on a specific motor see the ordering information for that motor.

To order crossover relief valve as a field conversion or a spare part consult factory for part number.

Mounting bolts are available as 5/16-18 socket head cap screw (4 required) as well as 2 o-rings.

Consult factory for part number.

* Zur Bestellung eines bestimmten Motors mit werkseitig montiertem Bremsdruckbegrenzungsventil konsultieren Sie bitte die Bestellinformationen für den betreffenden Motor.

Soll das Bremsdruckbegrenzungsventil für eine Feldumrüstung oder als Ersatzteil bestellt werden, bitte die Artikelnummer beim Werk erfragen.

Befestigungsschrauben in Form von 5/16-18-Sechskantkopfschrauben (es werden 4 benötigt) sowie 2 O-Ringe können vom Werk bezogen werden.

Artikelnummer beim Werk erfragen.

* Pour commander une soupape de sûreté transversale montée sur un certain moteur, voir les informations de commande pour ce moteur.

Pour commander une soupape de sûreté transversale pour la conversion sur place ou comme pièce de rechange, consulter l'usine pour obtenir le numéro de la pièce.

Les boulons de montage sont disponibles en tant que vis à tête creuse de 5/16-18 (4 sont requises) ainsi que 2 joints toriques.

Consulter l'usine pour obtenir le numéro de la pièce.

* Para pedir una válvula de alivio transversal montada en determinado motor, véanse las especificaciones de dicho motor.

Para pedir una válvula de alivio transversal para conversión directa o como parte de repuesto, consultar con fábrica sobre el número de parte.

Los pernos de montaje vienen en tipo de cabeza hueca hexagonal de 5/16-18 (se necesitan 4) y con 2 sellos toroidales (O rings).

Consultar con fábrica sobre el número de parte.

Consult factory for other available options, configurations ordering codes and lead times.

Fluid

To insure maximum motor performance and life, use a premium grade hydraulic or engine oil. Fluids with a minimum .125% zinc (or equivalent) anti-wear package should be used. A mineral or synthetic based 10W40 engine oil or hydraulic oil (200 SUS) is recommended. Nichols motor seals come standard in nitrile rubber. If a fluid that is not compatible with nitrile is to be used, flouroelastomer seal material can be specified.

- Minimum fluid viscosity - 50 SUS
- Recommended fluid operating temperature is -28°C to 82°C (-20°F to 180°F)
- Minimum recommended fluid filtration 25 micron with a beta ratio of 2.

Pressure

Operating the motor in its intermittent pressure range will shorten the life of the motor and should generally be restricted to 10% or less per minute. The reduced life resulting from continuous operation in the intermittent range may be acceptable in some applications. Consult the factory for details.

Case Drain

A check ball system drains the shaft seal to the outlet port regardless of direction of rotation of the shaft. This maintains low pressure on the shaft seal, reducing heat and friction for long seal life. If high pressure exists in the outlet port due to series operation, meter-out circuitry or other causes, the shaft seal can be externally drained to tank for low seal pressure. For continuous operation with outlet pressure above 1000 psi use of the external case drain is recommended for extended seal life.

Shaft Loading

The use of 1 inch and 25mm diameter shafts are not recommended when torque loads exceed 3500 lb-in. For 7/8 inch diameter shafts, torque should be limited to 3000 lb-in. Maximum thrust load on the shaft should not exceed 1000 lbs inward or outward.

Stainless Steel Shafts

Torque, speed, axial, and radial load ratings are reduced by 20% when operating with the stainless steel shaft that is optional on some series of motors. Maximum speed to be limited to 600 RPM.

Thru-Shafts

Shaft torque should not exceed 3000 lb-in.

Performance Data

Performance data shown in this catalog is the result of testing performed using petroleum based fluid at 120°F, 180 SUS. Actual performance will vary with fluid conditions. Lower viscosity will produce lower performance.

Run-In

For optimum performance and life, a 15 minute run-in period at no load and mid-flow conditions is recommended. Do not subject the system to full load until air has been bled from the hydraulic system and all contaminate particles have been filtered out.

Inlet Conditions

Positive pressure *must* be available at the motor inlet while it is operating. If an overrunning load causes the motor to rotate faster than the pump can fill it, cavitation will occur. Consult the factory for inlet pressure requirements and speed limitations.

Other Operating Conditions

Consult factory before operating at conditions exceeding any ratings or recommendations in this catalog.

Installation Recommendations

- To avoid contamination do not remove plastic port plugs until fittings are to be installed.
- Motor mounting flange must make full contact with equipment mount; do not use the mounting bolts to force the motor pilot into the pilot hole to align the motor.
- Pulleys, sprockets, wheels, or couplings should be properly aligned on the shaft to avoid excessive radial or thrust loads.
- To avoid damaging the thrust system, do not hammer on the motor or shaft to install or remove couplings, pulleys, sprockets, etc.

Hydraulic Formulas

$$HP_{in} = \frac{Q \Delta P}{1714}$$

$$HP_{out} = \frac{NT}{63025}$$

$$T = \frac{D \Delta Pe_m}{2 \pi}$$

$$Q = \frac{DN}{231\ e_v}$$

Where

HP	=	Horsepower
Q	=	Flow, GPM
P	=	Pressure, PSI
P	=	Pressure differential across the motor
Δ π	=	3.1416
T	=	Torque, lb in
D	=	Motor displacement, cubic inches per revolution
N	=	Shaft Speed, RPM
e_m	=	Mechanical efficiency
e_v	=	Volumetric efficiency

To Convert →	Into →	Multiply By
Into ←	To Convert ←	Divide By
bars	pounds/sq.in.	14.5
BTU/min	horsepower	.02356
BTU/min	kilowatts	.01757
centigrade	fahrenheit	(C°x9/5)+32
centimeters	inches	.3937
cu. cms.	cu. inches	.06102
cu. cms.	liters	.001
cu. inches	cu.cms.	16.39
cu. inches	liters	.01639
feet	meters	.3048
gallons	cu. inches	231
gallons	liters	3.785
horsepower	kilowatts	.7457
inches	millimeters	25.4
kilograms	pounds	2.205
pounds	newtons	4.448
pound-inches	newton-meters	.113
pound-inches	daNM	.0113
radians	degrees	57.3
square inches	sq. cms.	6.452

Side Load

Side loads are imposed upon the shaft of a motor by:

- Driving the load through a pulley or gear
- Supporting the weight of a vehicle or other load on the shaft

Or both

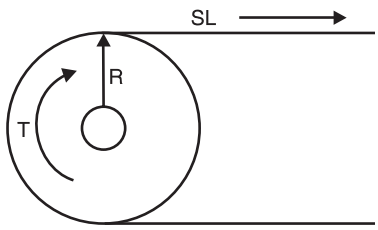

If the load above requires torque T pound-inches and is driven with a pulley on the motor shaft a with a radius of R inches, the side load imposed on the motor shaft is T/R pounds. If the motor shaft is connected to a sprocket for a chain drive, R is one half the pitch diameter of the sprocket. If an external load with a weight of W pounds is also being supported by the motor shaft above, the total side load on the shaft is:

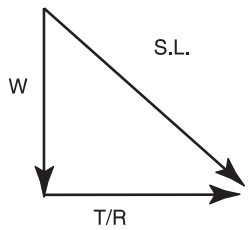

$$(SL)^2 = W^2 + (T/R)^2$$

$$\text{Side Load(lb)} = \sqrt{W^2 + (T/R)^2}$$

Warning

This Catalog is not a Controlled Document. All Dimensions listed herein are for reference only. Consult a Sales engineer for detailed information.

Vehicle Propulsion Systems

Hydraulic motors are often used to drive off-highway vehicles, either directly or through gear reducers. The power required to propel the vehicle, called "Tractive Effort," is supplied by the hydraulic motor(s). It is normally expressed in pounds and is the sum of the forces below:

TE = (RR+GR+F+DP) x 1.1 Where:

RR = Rolling Resistance
GR = Grade Resistance
F = Acceleration Force
DP = Drawbar Pull

Definitions

• Tractive Effort (TE)

Tractive effort is the total linear force that a vehicle can exert on the ground. Sometimes called "rim pull," it is the axle torque divided by the distance from the axle to the surface it is traversing.

• Rolling Resistance (RR)

Rolling resistance is the force in pounds required to propel a vehicle at constant speed over level terrain. It varies with the weight of the vehicle and the type of surface it is traversing. Soft sand, for example, offers more resistance to movement than concrete.

RR = GVW x R where:

RR = Rolling Resistance (lbs.)
GVW = Gross Vehicle Weight (lbs.)
R = Rolling Resistance Factor dependent upon type and condition of surface. Typical "R" values are shown in the accompanying table.

Surface Type	Surface Condition	R Value
Concrete	Excellent	0.010 lb.
Concrete	Good	0.015 lb.
Concrete	Poor	0.020 lb.
Asphalt	Good	0.012 lb.
Asphalt	Fair	0.017 lb.
Asphalt	Poor	0.022 lb.
Macadam	Good	0.015 lb.
Macadam	Fair	0.022 lb.
Macadam	Poor	0.037 lb.
Cobbles	Ordinary	0.055 lb.
Cobbles	Poor	0.085 lb.
Grass		0.025 lb.
Snow	2 In.	0.025 lb.
Snow	4 In.	0.037 lb.
Dirt	Smooth	0.025 lb.
Dirt	Sandy	0.037 lb.
Mud		0.037 to 0.150 lb.
Sand	Level/Soft	0.060 to 0.150 lb.
Sand	Dune	0.150 to 0.300 lb.

• Grade Resistance (GR)

Grade resistance is the additional force required to move a vehicle up an incline. The grade of a slope is normally expressed as a percentage, and represents the number of feet of rise in 100 feet of length. A slope that rises 10 feet in 100 feet has a grade of 10%. The gradeability of a vehicle is defined as the maximum grade the vehicle can climb.

GR = 0.01 x GVW x G where:

GR = Grade Resistance (lbs.)
GVW = Gross Vehicle Weight (lbs.)
G = Grade (%)

The following table gives the approximate relationship between grade in percent and slope in degrees.

Grade (Percent)	Slope (Degrees)
1%	0° 35'
2%	1° 9'
5%	2° 51'
6%	3° 26'
8%	4° 35'
10%	5° 43'
12%	6° 54'
15%	8° 31'
20%	11° 19'
25%	14° 3'
32%	18°
60%	31°

• Acceleration Force (F)

The force required to accelerate a vehicle from an initial speed V_1 (in feet/second) to speed V_2 in T seconds is the accelerating force in pounds. If the acceleration is from rest, V_1 is zero.

$$F = \frac{V \times GVW}{T \times 32.16}$$ where

V = Change in Velocity (ft. per Second) (Final Velocity - Initial Velocity)
GVW = Gross Vehicle Weight (lbs.)
T = Time for Velocity Change (Seconds)

Note - To obtain velocity in feet per second when MPH is known, Multiply MPH by 1.467.

• Drawbar Pull (DP)

Drawbar Pull is the force a vehicle can exert on a load in addition to the force required to propel itself.

Actual force to tow or push a load can be calculated based upon Rolling Resistance, Accelerating Force and Grade Resistance of towed or pushed load.

• Motor Torque

The total Tractive effort required to propel a vehicle is the sum of the forces due to Rolling Resistance, Grade Resistance, Acceleration and Drawbar Pull plus 10% for friction and other variables:

TE = (RR + GR + F + DP) x 1.1

When Tractive Effort has been calculated, hydraulic motor torque can be estimated by:

$$T = \frac{TE \times r}{G \times N}$$ where:

T = Hydraulic Motor Torque (lbs. in.)
TE = Tractive Effort
r = Rolling Radius of Driven Tires (inches)
G = Gear Reduction Ratio Between Hydraulic Motors and Driven Wheels (if none, use a value of 1)
N = Number of Driving Motors

• Slip Torque

Slip torque is the torque at the motor shaft that will cause the wheels or tracks to break traction and skid. It is affected by the weight of the vehicle and the coefficient of friction between the wheels or tracks and the surface.

$$ST = \frac{VW \times u \times r}{G \times N}$$ where:

ST	=	Hydraulic Motor Slip Torque (lb in)
VW	=	Maximum Weight on Driven Wheel (lb) Including: Allowable Vehicle Overload Dynamic Weight Shift.
u	=	Coefficient of Friction Between Tire and Ground. (A value of 0.6 is used for "normal" tires and an average road surface)
r	=	Rolling Radius of Driven Tires (inches)
G	=	Gear Reduction Ratio Between Hydraulic Motors and Driven Wheel.
N	=	Number of Driving Motors

• Rolling Radius

The rolling radius should be based on actual application factors such as Plyrating, Rated Load and inflation pressure can result in different values.

• Hydraulic Motor Speed

$$S = \frac{168 \times V \times G}{r}$$ where:

S	=	Required Hydraulic Motor Speed (RPM)
V	=	Desired Vehicle Velocity (MPH)
G	=	Gear Reduction Ratio Between Hydraulic Motors and Driven Wheels (if none, use a value of 1)
r	=	Rolling Radius of driven Tires (inches)

The chart below will estimate the wheel RPM -vs- vehicle velocity for various rolling radii.

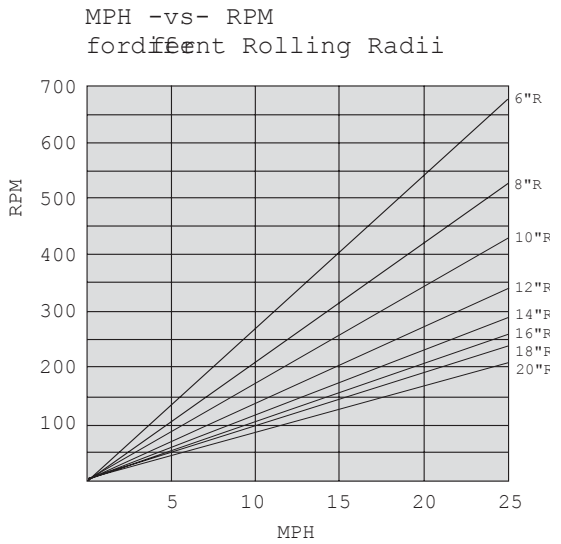

High Speed Hydraulic Motors

Catalog HY13-2600-800-001/NA

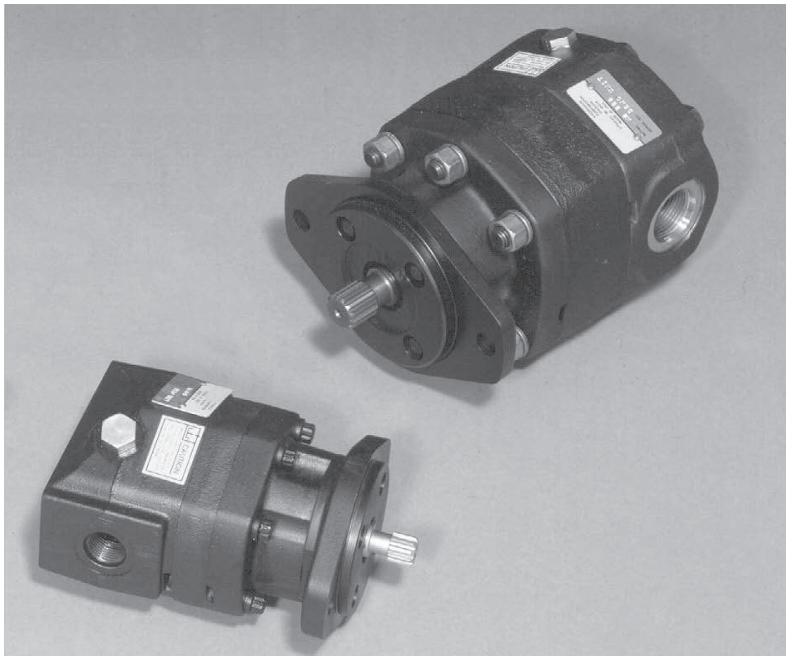

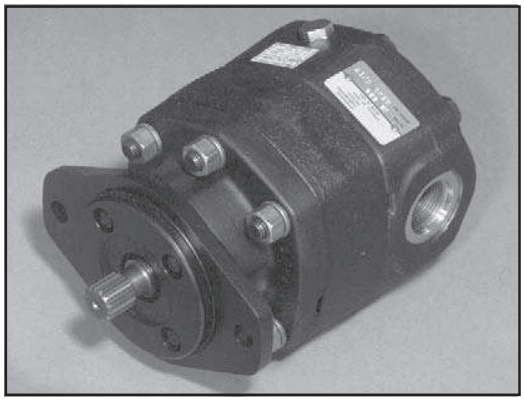

Features

- **High Starting Torque** typically 90% of running torque.
- **Smooth Output Torque** throughout the entire speed range of the motor.
- **High Speed Capabilities** up to 7500 rpm on some models.
- **Bi-Directional Operation** built in checks internally relieve high pressure from the shaft seal.
- **High Pressure Shaft Seal** allows back pressure to 400 PSI without the requirement of Case Drain.
- **Standard SAE Mounting** 2 or 4 bolt mounting flanges, shaft and port dimensions conform to SAE standards.
- **Long Life & Quiet Operation** Precision Gerotor Design results in a motor with extended operating life and noise levels below most other hydraulic motors.
- **Heavy Duty Bearings** capable of withstanding radial and thrust loads.

Ordering Information

XX	X	XX	XX	S	XX	N	X
Motor Series	SAE Port & Mounting/ Valve Mount	Product Code	Port Size	Port Type	Shaft Style	Drain	Shaft Seal

Series	
Code	**Type**
M2	SAE 101 (B-Frame)
M4	SAE 82 (A-Frame)

SAE Port & Mounting		
Code	**Ports**	**Mtg.**
B	Side	2-Bolt
D†	Side	4-Bolt

† M4 not available.

Port Size		
Series	**Code**	**SAE**
M4	10	10
	12	12
M2	12	12
	16	16

Port Type	
Code	**Type**
S	SAE Straight Thread

Shaft Style	
Code	**Type**
20†	Long, Single-End
30	Short, Single-End
40	Spine, Single-End

† M4 only available with 20 code shaft.

Drain	
Code	**Type**
N	Internal

Includes plugged external drain.

Shaft Seal	
Code	**Type**
B	Nitrile
V	Fluorocarbon

Product Code			
Series	**Code**	**Theoretical cm^3/rev**	**Displacement in^3/rev**
M4	**015**	2.45	.15
	030	4.91	.30
	045	7.37	.45
	060	9.83	.60
	075	12.29	.75
M2	**085**	13.9	.85
	127	20.8	1.27
	169	27.7	1.69
	254	41.6	2.54
	339	55.6	3.39
	508	83.2	5.08

THERMAL SHOCK WARNING:

IF THE MOTOR IS TO OPERATED BY FLUID WHICH IS 80°F OR MORE ABOVE THE OPERATING ENVIRONMENT TEMPERATURE, CONSULT FACTORY.

Applications

Parker motors serve our customers worldwide in many industries and in many applications. Typical applications include:

Fan Drives High speed capabilities means increased cooling capacity. Rugged bearing design allows the fan to be mounted directly on the motor shaft.

Swing Drives High starting torque and smooth output torque throughout the motor's speed range means optimum control.

Vibratory Drives Rugged design, high speed capabilities, and optional cross port relief valve means maximum life for vibratory drives.

Wheel Drives High speed capabilities and high starting torque means faster road speeds and increased productivity.

Winch Drives Smooth output torque throughout the speed range, high speed capabilities, and high starting torque means increased control, greater productivity.

Starting and running torque comparison between Parker Gerotor and typical Spur Gear and Vane Motors.

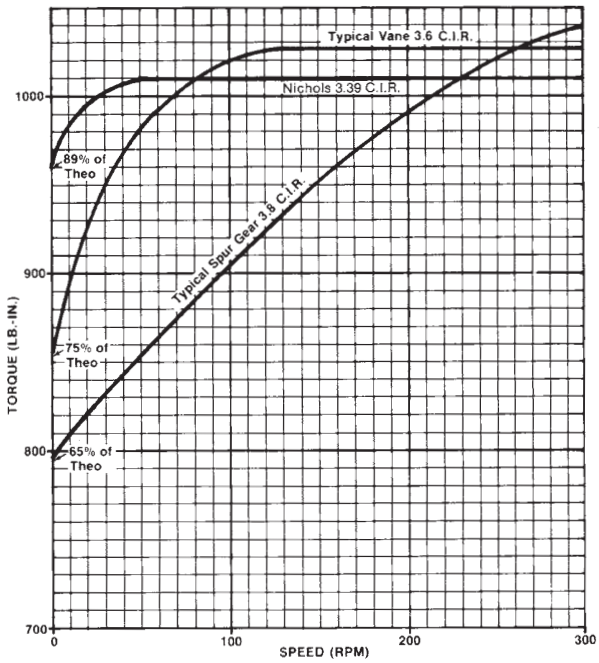

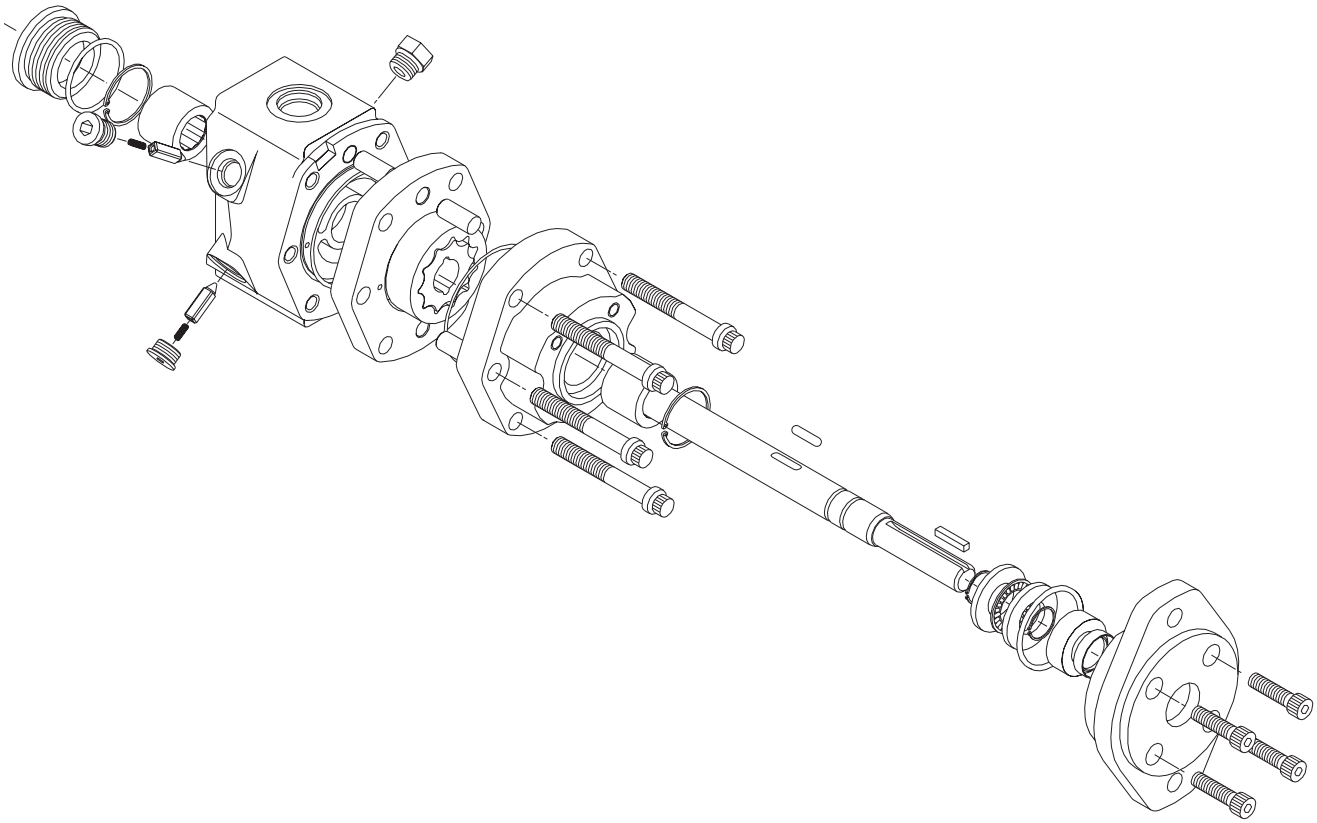

Performance Data & Mounting Data

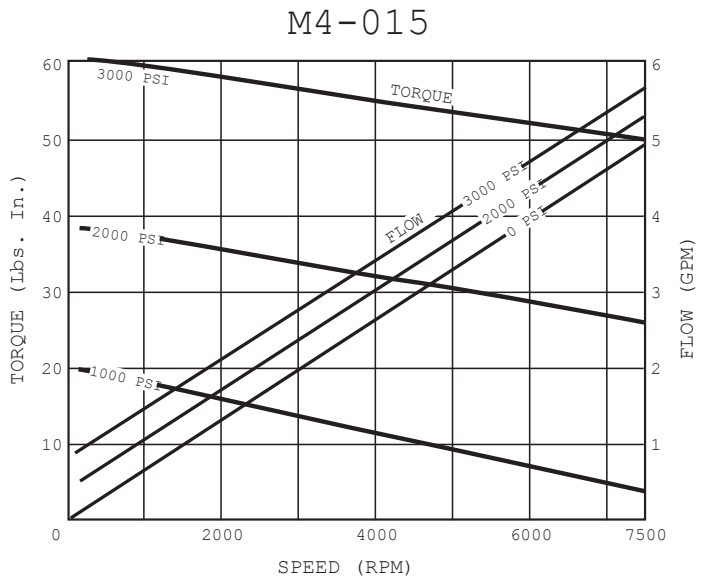

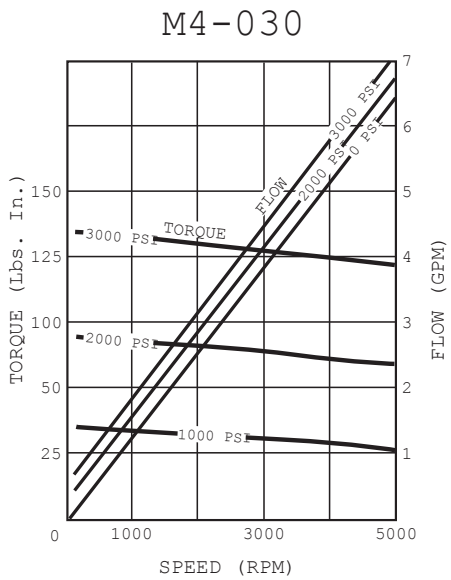

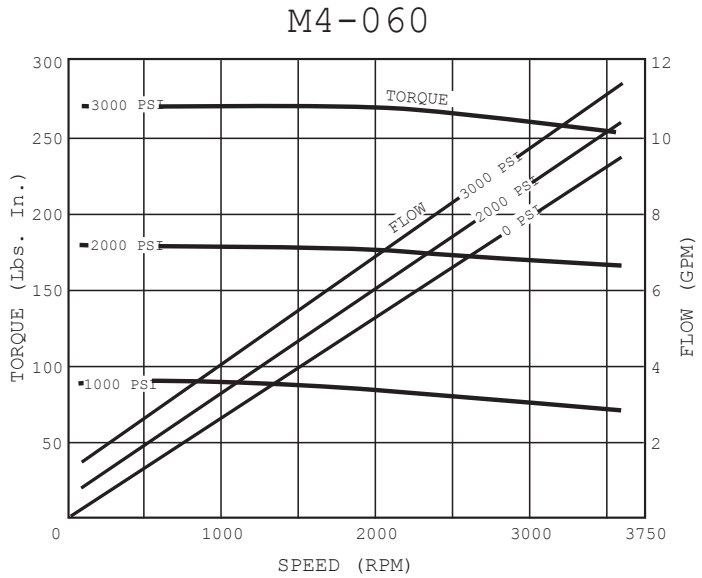

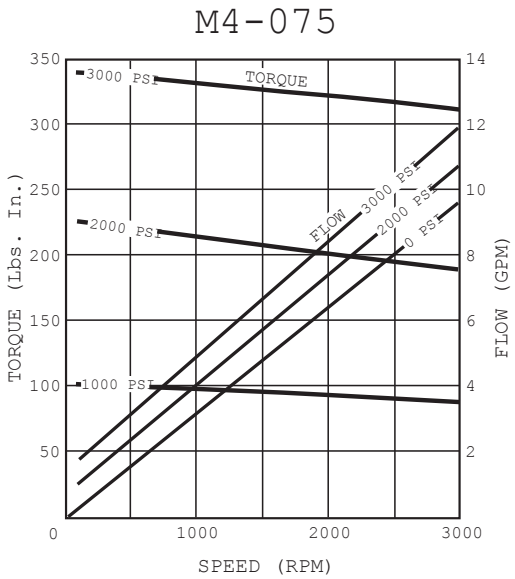

Displacement

	cm³/rev	(in³/rev)
015 Unit	2.45	(.15)
030 Unit	4.91	(.30)
045 Unit	7.37	(.45)
060 Unit	9.83	(.60)
075 Unit	12.29	(.75)

Weight

015 Unit	7.3 Kg	(16 lb)
030 Unit	7.7 Kg	(17 lb)
045 Unit	8.2 Kg	(18 lb)
060 Unit	8.6 Kg	(19 lb)
075 Unit	9.1 Kg	(20 lb)

Speed

Recommended Range

015 Unit	75 to 7500 rpm
030 Unit	50 to 5000 rpm
045 Unit	50 to 5000 rpm
060 Unit	36 to 3600 rpm
075 Unit	30 to 3000 rpm

Minimum speeds indicated are based on constant load. For speeds outside of the recommended range, consult the factory.

Performance Curves:

Data based on:

Oil: 65 cst (300 SSU) Mobil DTE-26

Temp: 38°C (100°F)

Pressure

Continuous:	2000 PSI
† Intermittent, Max:	2400 PSI
‡ Transient, Max:	3000 PSI

† Intermittent conditions are to be less than 10% of each minute.

‡ Transient conditions are to be less than 1% of every minute.

Performance Data & Mounting Data

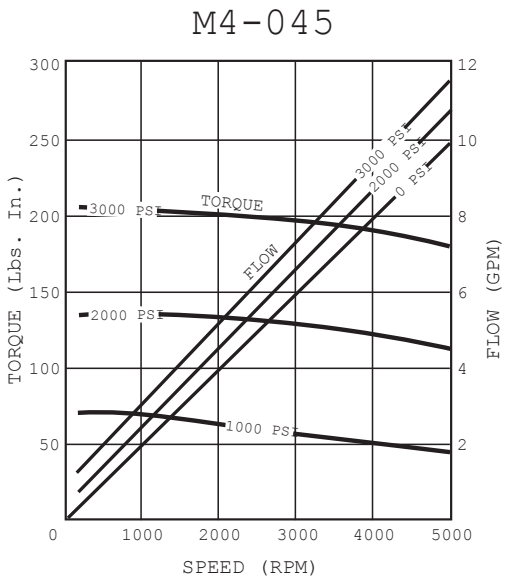

Dimensions are shown in millimeters.
Dimensions within ( ) are in inches.

Code	A	B
015	143.26 (5.64)	107.44 (4.23)
030	149.61 (5.89)	113.79 (4.48)
045	156.21 (6.15)	120.14 (4.73)
060	162.31 (6.39)	126.49 (4.98)
075	168.66 (6.64)	132.84 (5.23)

MOUNTING DATA

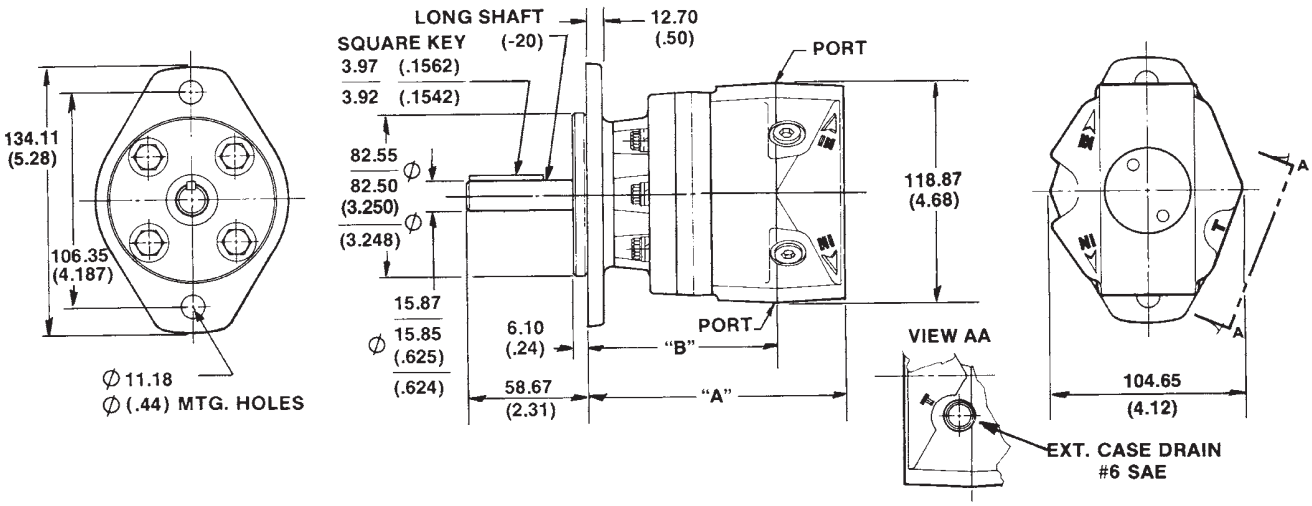

Performance Data

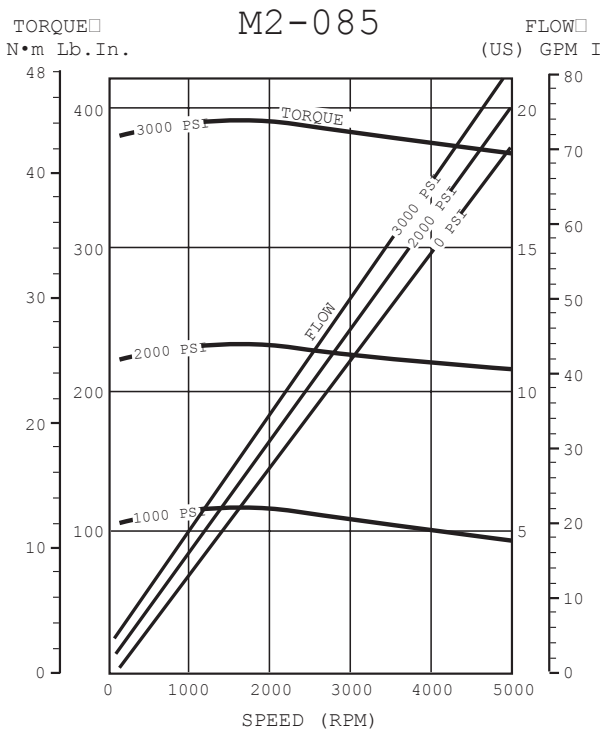

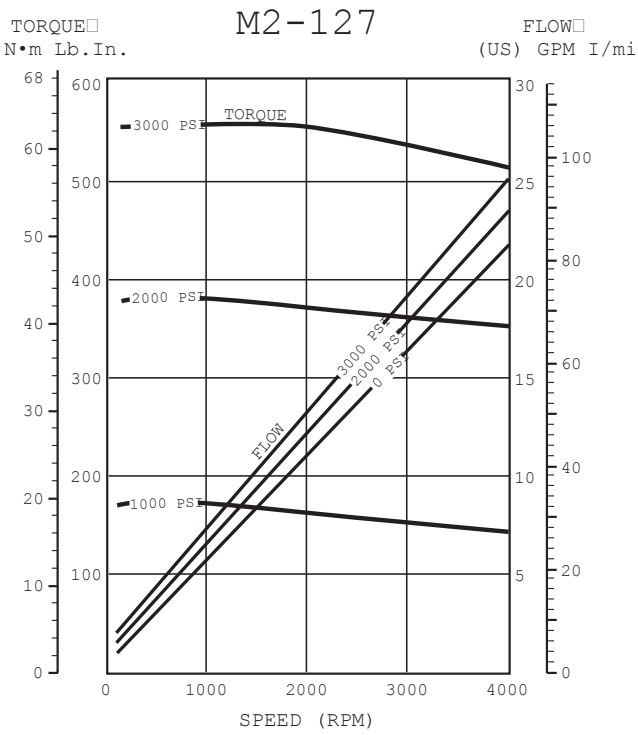

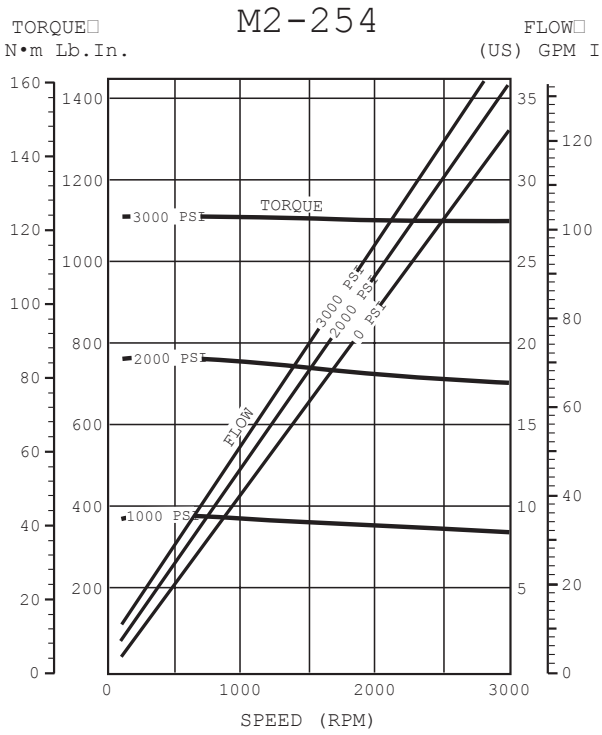

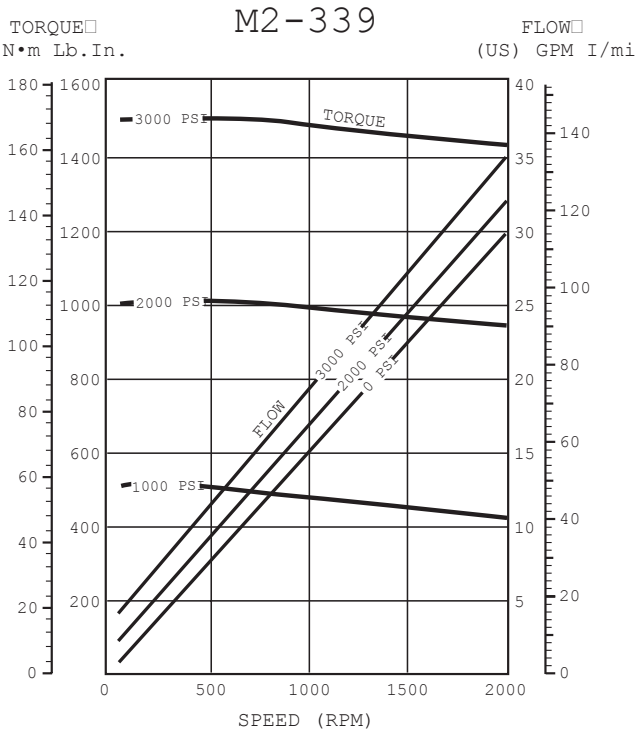

Performance Data

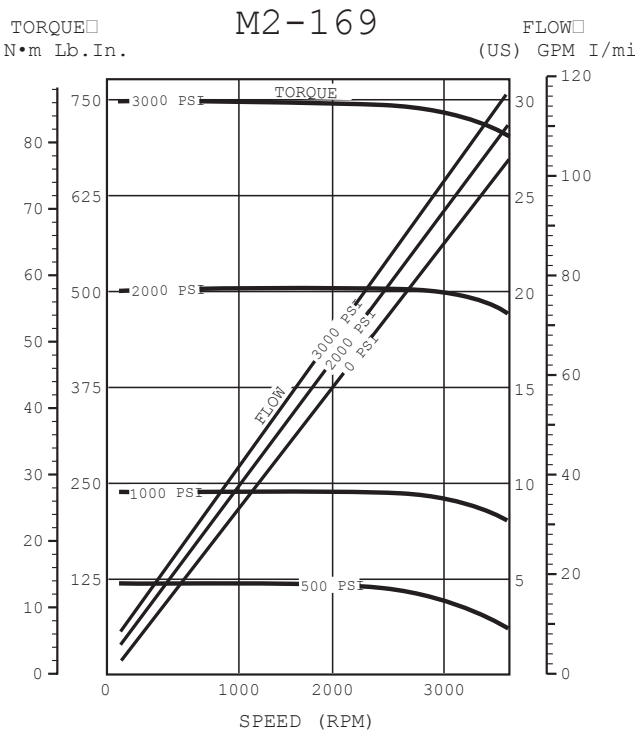

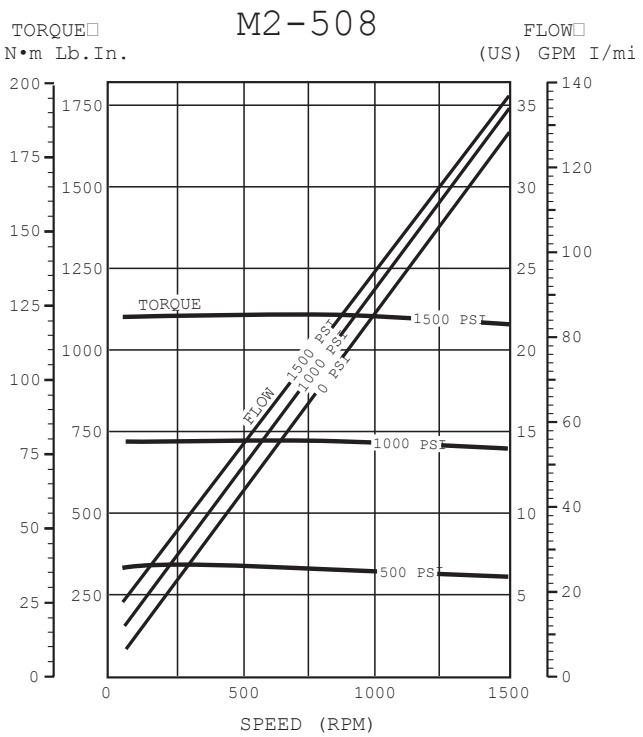

Displacement

	cm³/rev	(in³/rev)
085 Unit	13.9	(0.85)
127 Unit	20.8	(1.27)
169 Unit	27.7	(1.69)
254 Unit	41.6	(2.54)
339 Unit	55.6	(3.39)
508 Unit	83.2	(5.08)

Pressure

Continuous:
M2-508 1000 PSI
All other Units 2000 PSI

† Intermittent, Max:
M2-508 1400 PSI
All other Units 2400 PSI

‡ Transient, Max:
M2-508 1700 PSI
All other Units 3000 PSI

† Intermittent conditions are to be less than 10% of each minute.

‡ Transient conditions are to be less than 1% of every minute.

Speed

Recommended Range

085 Unit	50 to 5000 rpm
127 Unit	40 to 4000 rpm
169 Unit	36 to 3600 rpm
254 Unit	30 to 3000 rpm
339 Unit	20 to 2000 rpm
508 Unit	15 to 1500 rpm

Minimum speeds indicated are based on constant load. For speeds outside of the recommended range, consult the factory.

Weight

085 Unit	15.4 Kg	(34 lb)
127 Unit	16.3 Kg	(36 lb)
169 Unit	17.2 Kg	(38 lb)
254 Unit	18.6 Kg	(41 lb)
339 Unit	20.4 Kg	(45 lb)
508 Unit	24.0 Kg	(52 lb)

Performance Curves:

Data based on:
Oil: 65 cst (300 SSU) Mobil DTE-26
Temp: 38°C (100°F)
* Stall torque band is application dependent, consult factory.

Mounting Data

Dimensions are shown in millimeters.
Dimensions within ( ) are in inches.

Code	Dimension "A"
085	158.8 (6.25)
127	165.1 (6.50)
169	171.5 (6.75)
254	184.2 (7.25)
339	196.9 (7.75)
508	222.3 (8.75)

FLANGE OPTION
SAE 101-4 Mounting

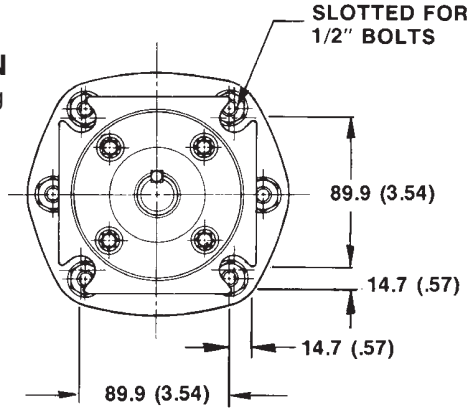

DIMENSIONS

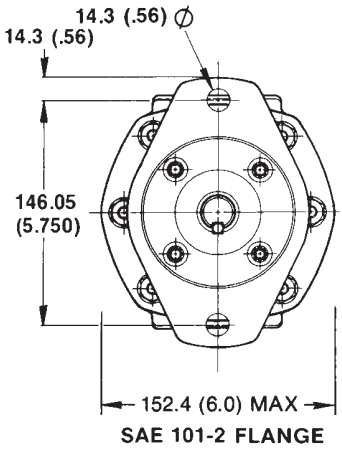

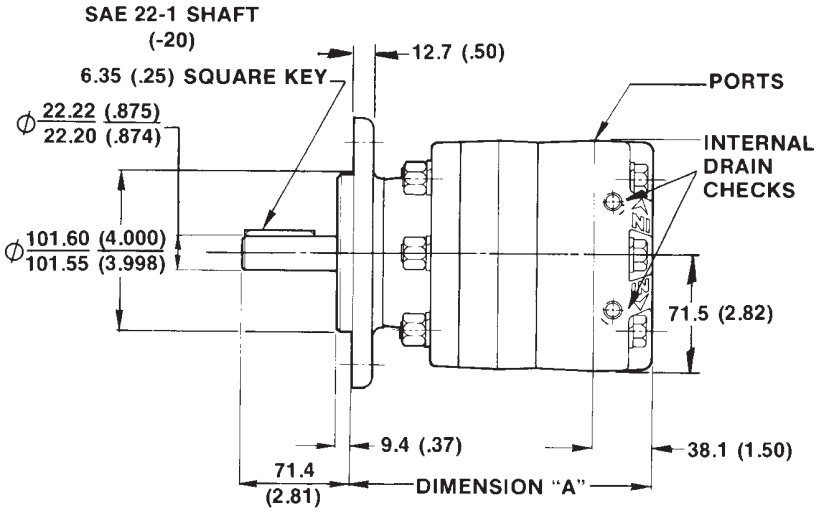

PORT LOCATION

1. The shaft will rotate in the direction of this "ARROWHEAD" when Port "A" is the inlet "IN" or pressure port.
2. With Port "B" as the inlet "IN" or pressure port, the shaft will rotate in the direction of this "ARROWHEAD".

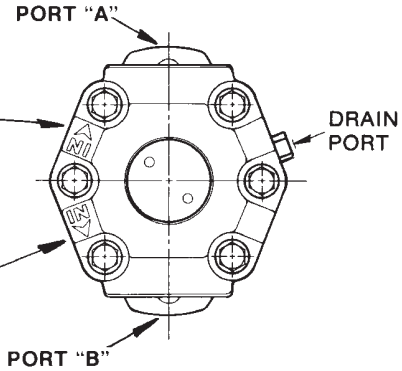

DRAIN PORT

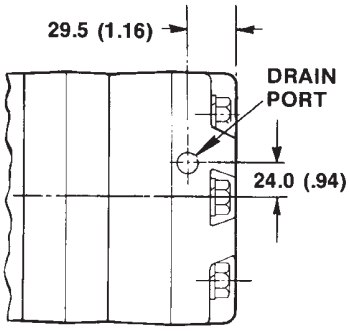

Drain Port Will Be:
1. No. 6-SAE for the SAE ported motors.

Mounting Data

SHAFT OPTIONS

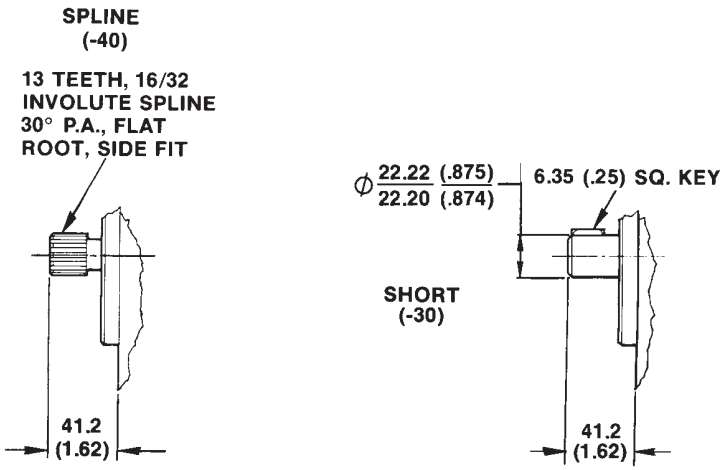

Operating Pressures

Continuous:
- M2-508 1000 PSI
- All other Units 2000 PSI

Intermittent, Max:
- M2-508 1400 PSI
- All other Units 2400 PSI

Transient, Max:
- M2-508 1700 PSI
- All other Units 3000 PSI

Filtration

25 micron or less

Fluids

To insure ultimate component life, use premium quality hydraulic oils. Fluids with effective quantities of anti-wear agents or additives, (such as Mobil Oil DTE-26), are highly recommended.

Viscosity

Maximum	1000 centistokes 5000 SSU
Minimum	13.5 centistokes 70 SSU

Recommended Temperature Range

-40°C (-40°F) to 82°C (180°F)

Case Drain Precaution

If outlet port exceeds 400 PSI, the external case drain should be used with no more than 400 PSI back pressure.

Dimensions

Published dimensions are nominal. Allowances should be made for dimensional variations of cast parts.

Installation Requirements

Pulleys, sprockets, and belts should be properly aligned on the shaft; and fan blades should be properly sized to prevent excessive thrust loads.

Shaft Seal

The standard Nitrile shaft seal is adequate for most applications. For applications which involve shaft speeds above 2500 rpm or synthetic fluids, the operational Viton shaft seal should be specified.

Static Seals

All the o-rings included within the motor and the shaft dust seal are Nitrile. They may be used with all types of hydraulic fluids. However, since these seals swell after exposure to ester base synthetic fluids, they should be replaced if the motor is repaired.

Motor Precaution

A hydraulic motor is not designed to hold a suspended load. Therefore, if the application requires a locked position, a mechanical holding device (such as a brake) must be employed. Consult factory for availability.

For different operating conditions, consult the factory.

The items described in this document and other documents and descriptions provided by Parker Hannifin Corporation, Hydraulics Group, and its authorized distributors ("Seller") are hereby offered for sale at prices to be established by Seller. This offer and its acceptance by any customer ("Buyer") shall be governed by all of the following Terms and Conditions. Buyer's order for any item described in its document, when communicated to Seller verbally, or in writing, shall constitute acceptance of this offer. All goods or work described will be referred to as "Products".

1. Terms and Conditions. Seller's willingness to offer Products, or accept an order for Products, to or from Buyer is expressly conditioned on Buyer's assent to these Terms and Conditions and to the terms and conditions found on-line at www.parker.com/saleterms/. Seller objects to any contrary or additional term or condition of Buyer's order or any other document issued by Buyer.

2. Price Adjustments; Payments. Prices stated on the reverse side or preceding pages of this document are valid for 30 days. After 30 days, Seller may change prices to reflect any increase in its costs resulting from state, federal or local legislation, price increases from its suppliers, or any change in the rate, charge, or classification of any carrier. The prices stated on the reverse or preceding pages of this document do not include any sales, use, or other taxes unless so stated specifically. Unless otherwise specified by Seller, all prices are F.O.B. Seller's facility, and payment is due 30 days from the date of invoice. After 30 days, Buyer shall pay interest on any unpaid invoices at the rate of 1.5% per month or the maximum allowable rate under applicable law.

3. Delivery Dates; Title and Risk; Shipment. All delivery dates are approximate and Seller shall not be responsible for any damages resulting from any delay. Regardless of the manner of shipment, title to any products and risk of loss or damage shall pass to Buyer upon tender to the carrier at Seller's facility (i.e., when it's on the truck, it's yours). Unless otherwise stated, Seller may exercise its judgment in choosing the carrier and means of delivery. No deferment of shipment at Buyers' request beyond the respective dates indicated will be made except on terms that will indemnify, defend and hold Seller harmless against all loss and additional expense. Buyer shall be responsible for any additional shipping charges incurred by Seller due to Buyer's changes in shipping, product specifications or in accordance with Section 13, herein.

4. Warranty. Seller warrants that the Products sold hereunder shall be free from defects in material or workmanship for a period of eighteen months from the date of delivery to Buyer. The prices charged for Seller's products are based upon the exclusive limited warranty stated above, and upon the following disclaimer: DISCLAIMER OF WARRANTY: THIS WARRANTY COMPRISES THE SOLE AND ENTIRE WARRANTY PERTAINING TO PRODUCTS PROVIDED HEREUNDER. SELLER DISCLAIMS ALL OTHER WARRANTIES, EXPRESS AND IMPLIED, INCLUDING MERCHANTABILITY AND FITNESS FOR A PARTICULAR PURPOSE.

5. Claims; Commencement of Actions. Buyer shall promptly inspect all Products upon delivery. No claims for shortages will be allowed unless reported to the Seller within 10 days of delivery. No other claims against Seller will be allowed unless asserted in writing within 60 days after delivery or, in the case of an alleged breach of warranty, within 30 days after the date within the warranty period on which the defect is or should have been discovered by Buyer. Any action based upon breach of this agreement or upon any other claim arising out of this sale (other than an action by Seller for any amount due to Seller from Buyer) must be commenced within thirteen months from the date of tender of delivery by Seller or, for a cause of action based upon an alleged breach of warranty, within thirteen months from the date within the warranty period on which the defect is or should have been discovered by Buyer.

6. LIMITATION OF LIABILITY. UPON NOTIFICATION, SELLER WILL, AT ITS OPTION, REPAIR OR REPLACE A DEFECTIVE PRODUCT, OR REFUND THE PURCHASE PRICE. IN NO EVENT SHALL SELLER BE LIABLE TO BUYER FOR ANY SPECIAL, INDIRECT, INCIDENTAL OR CONSEQUENTIAL DAMAGES ARISING OUT OF, OR AS THE RESULT OF, THE SALE, DELIVERY, NON-DELIVERY, SERVICING, USE OR LOSS OF USE OF THE PRODUCTS OR ANY PART THEREOF, OR FOR ANY CHARGES OR EXPENSES OF ANY NATURE INCURRED WITHOUT SELLER'S WRITTEN CONSENT, EVEN IF SELLER HAS BEEN NEGLIGENT, WHETHER IN CONTRACT, TORT OR OTHER LEGAL THEORY. IN NO EVENT SHALL SELLER'S LIABILITY UNDER ANY CLAIM MADE BY BUYER EXCEED THE PURCHASE PRICE OF THE PRODUCTS.

7. Contingencies. Seller shall not be liable for any default or delay in performance if caused by circumstances beyond the reasonable control of Seller.

8. User Responsibility. The user, through its own analysis and testing, is solely responsible for making the final selection of the system and Product and assuring that all performance, endurance, maintenance, safety and warning requirements of the application are met. The user must analyze all aspects of the application and follow applicable industry standards and Product information. If Seller provides Product or system options, the user is responsible for determining that such data and specifications are suitable and sufficient for all applications and reasonably foreseeable uses of the Products or systems.

9. Loss to Buyer's Property. Any designs, tools, patterns, materials, drawings, confidential information or equipment furnished by Buyer or any other items which become Buyer's property, may be considered obsolete and may be destroyed by Seller after two consecutive years have elapsed without Buyer placing an order for the items which are manufactured using such property. Seller shall not be responsible for any loss or damage to such property while it is in Seller's possession or control.

10. Special Tooling. A tooling charge may be imposed for any special tooling, including without limitation, dies, fixtures, molds and patterns, acquired to manufacture Products. Such special tooling shall be and remain Seller's property notwithstanding payment of any charges by Buyer. In no event will Buyer acquire any interest in apparatus belonging to Seller which is utilized in the manufacture of the Products, even if such apparatus has been specially converted or adapted for such manufacture and notwithstanding any charges paid by

Buyer. Unless otherwise agreed, Seller shall have the right to alter, discard or otherwise dispose of any special tooling or other property in its sole discretion at any time.

11. Buyer's Obligation; Rights of Seller. To secure payment of all sums due or otherwise, Seller shall retain a security interest in the goods delivered and this agreement shall be deemed a Security Agreement under the Uniform Commercial Code. Buyer authorizes Seller as its attorney to execute and file on Buyer's behalf all documents Seller deems necessary to perfect its security interest. Seller shall have a security interest in, and lien upon, any property of Buyer in Seller's possession as security for the payment of any amounts owed to Seller by Buyer.

12. Improper Use and Indemnity. Buyer shall indemnify, defend, and hold Seller harmless from any claim, liability, damages, lawsuits, and costs (including attorney fees), whether for personal injury, property damage, patent, trademark or copyright infringement or any other claim, brought by or incurred by Buyer, Buyer's employees, or any other person, arising out of: (a) improper selection, improper application or other misuse of Products purchased by Buyer from Seller; (b) any act or omission, negligent or otherwise, of Buyer; (c) Seller's use of patterns, plans, drawings, or specifications furnished by Buyer to manufacture Product; or (d) Buyer's failure to comply with these terms and conditions. Seller shall not indemnify Buyer under any circumstance except as otherwise provided.

13. Cancellations and Changes. Orders shall not be subject to cancellation or change by Buyer for any reason, except with Seller's written consent and upon terms that will indemnify, defend and hold Seller harmless against all direct, incidental and consequential loss or damage. Seller may change product features, specifications, designs and availability with notice to Buyer.

14. Limitation on Assignment. Buyer may not assign its rights or obligations under this agreement without the prior written consent of Seller.

15. Entire Agreement. This agreement contains the entire agreement between the Buyer and Seller and constitutes the final, complete and exclusive expression of the terms of the agreement. All prior or contemporaneous written or oral agreements or negotiations with respect to the subject matter are herein merged.

16. Waiver and Severability. Failure to enforce any provision of this agreement will not waive that provision nor will any such failure prejudice Seller's right to enforce that provision in the future. Invalidation of any provision of this agreement by legislation or other rule of law shall not invalidate any other provision herein. The remaining provisions of this agreement will remain in full force and effect.

17. Termination. This agreement may be terminated by Seller for any reason and at any time by giving Buyer thirty (30) days written notice of termination. In addition, Seller may by written notice immediately terminate this agreement for the following: (a) Buyer commits a breach of any provision of this agreement (b) the appointment of a trustee, receiver or custodian for all or any part of Buyer's property (c) the filing of a petition for relief in bankruptcy of the other Party on its own behalf, or by a third party (d) an assignment for the benefit of creditors, or (e) the dissolution or liquidation of the Buyer.

18. Governing Law. This agreement and the sale and delivery of all Products hereunder shall be deemed to have taken place in and shall be governed and construed in accordance with the laws of the State of Ohio, as applicable to contracts executed and wholly performed therein and without regard to conflicts of laws principles. Buyer irrevocably agrees and consents to the exclusive jurisdiction and venue of the courts of Cuyahoga County, Ohio with respect to any dispute, controversy or claim arising out of or relating to this agreement. Disputes between the parties shall not be settled by arbitration unless, after a dispute has arisen, both parties expressly agree in writing to arbitrate the dispute.

19. Indemnity for Infringement of Intellectual Property Rights. Seller shall have no liability for infringement of any patents, trademarks, copyrights, trade dress, trade secrets or similar rights except as provided in this Section. Seller will defend and indemnify Buyer against allegations of infringement of U.S. patents, U.S. trademarks, copyrights, trade dress and trade secrets ("Intellectual Property Rights"). Seller will defend at its expense and will pay the cost of any settlement or damages awarded in an action brought against Buyer based on an allegation that a Product sold pursuant to this Agreement infringes the Intellectual Property Rights of a third party. Seller's obligation to defend and indemnify Buyer is contingent on Buyer notifying Seller within ten (10) days after Buyer becomes aware of such allegations of infringement, and Seller having sole control over the defense of any allegations or actions including all negotiations for settlement or compromise. If a Product is subject to a claim that it infringes the Intellectual Property Rights of a third party, Seller may, at its sole expense and option, procure for Buyer the right to continue using the Product, replace or modify the Product so as to make it noninfringing, or offer to accept return of the Product and return the purchase price less a reasonable allowance for depreciation. Notwithstanding the foregoing, Seller shall have no liability for claims of infringement based on information provided by Buyer, or directed to Products delivered hereunder for which the designs are specified in whole or part by Buyer, or infringements resulting from the modification, combination or use in a system of any Product sold hereunder. The foregoing provisions of this Section shall constitute Seller's sole and exclusive liability and Buyer's sole and exclusive remedy for infringement of Intellectual Property Rights.

20. Taxes. Unless otherwise indicated, all prices and charges are exclusive of excise, sales, use, property, occupational or like taxes which may be imposed by any taxing authority upon the manufacture, sale or delivery of Products.

21. Equal Opportunity Clause. For the performance of government contracts and where dollar value of the Products exceed $10,000, the equal employment opportunity clauses in Executive Order 11246, VEVRAA, and 41 C.F.R. §§ 60-1.4(a), 60-741.5(a), and 60-250.4, are hereby incorporated.

Parker Hannifin Corporation
6035 Parkland Blvd.
Cleveland, Ohio 44124-4141
Telephone: (216) 896-3000
Fax: (216) 896-4000
www.parker.com

Parker Hannifin Corporation

About Parker Hannifin Corporation

Parker Hannifin is a leading global motion-control company dedicated to delivering premier customer service. A Fortune 500 corporation listed on the New York Stock Exchange (PH), our components and systems comprise over 1,400 product lines that control motion in some 1,000 industrial and aerospace markets. Parker is the only manufacturer to offer its customers a choice of hydraulic, pneumatic, and electromechanical motion-control solutions. Our Company has the largest distribution network in its field, with over 7,500 distributors serving nearly 400,000 customers worldwide.

Parker's Charter

To be a leading worldwide manufacturer of components and systems for the builders and users of durable goods. More specifically, we will design, market and manufacture products controlling motion, flow and pressure. We will achieve profitable growth through premier customer service.

Product Information

North American customers seeking product information, the location of a nearby distributor, or repair services will receive prompt attention by calling the Parker Product Information Center at our toll-free number: 1-800-C-PARKER (1-800-272-7537). In Europe, call 00800-C-PARKER-H (00800-2727-5374).

The Aerospace Group is a leader in the development, design, manufacture and servicing of control systems and components for aerospace and related high-technology markets, while achieving growth through premier customer service.

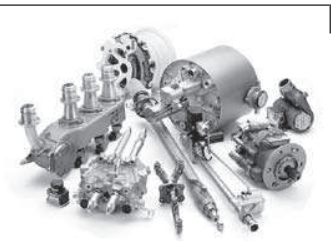

The Climate & Industrial Controls Group designs, manufactures and markets system-control and fluid-handling components and systems to refrigeration, air-conditioning and industrial customers worldwide.

The Fluid Connectors Group designs, manufactures and markets rigid and flexible connectors, and associated products used in pneumatic and fluid systems.

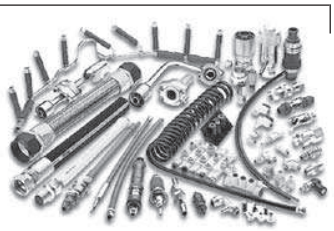

The Seal Group designs, manufactures and distributes industrial and commercial sealing devices and related products by providing superior quality and total customer satisfaction.

The Hydraulics Group designs, produces and markets a full spectrum of hydraulic components and systems to builders and users of industrial and mobile machinery and equipment.

The Filtration Group designs, manufactures and markets quality filtration and clarification products, providing customers with the best value, quality, technical support, and global availability.

The Automation Group is a leading supplier of pneumatic and electromechanical components and systems to automation customers worldwide.

The Instrumentation Group is a global leader in the design, manufacture and distribution of high-quality critical flow components for worldwide process instrumentation, ultra-high-purity, medical and analytical applications.

Sales Offices

Argentina, Buenos Aires
Tel: (54) 33 2744 4129

Australia, Castle Hill
Tel: (61) 2 9634 7777

Austria, Wiener Neustadt
Tel: (43) 2622 23501 0

Belgium, Nivelles
Tel: (32) 67 280 900

Brazil, Cachoeirinha RS
Tel: (55) 51 3470 9144

Canada, Milton, Ontario
Tel: (905) 693 3000

China, Beijing
Tel: (86) 10 6561 0520

China, Shanghai
Tel: (86) 21 5031 2525

Czech Republic and Slovakia, Klecany
Tel: (420) 284 083 111

Denmark, Ballerup
Tel: (45) 4356 0400

Finland, Vantaa
Tel: (358) 20 753 2500

France, Contamine-sur-Arve
Tel: (33) 4 50 25 80 25

Germany, Kaarst
Tel: (49) 2131 4016 0

Greece, Athens
Tel: (30) 210 933 6450

Hong Kong
Tel: (852) 2428 8008

Hungary, Budapest
Tel: (36) 1 220 4155

India, Mahape, Navi Mumbai
Tel: (91) 22 6513 7081

Ireland, County Dublin, Baldonnell
Tel: (353) 1 466 6370

Italy, Corsico, Milano
Tel: (39) 02 45 19 21

Japan, Tokyo
Tel: (81) 3 6408 3900

Korea, Seoul
Tel: (82) 2 559 0400

Malaysia, Subang Jaya
Tel: (60) 3 5638 1476

Mexico, (Mobile)
Apodaca, N.L.
Tel: (52) 81 8156 6000

Mexico, (Industrial)
Toluca, Edo. de Mexico
Tel: (52) 72 2275 4200

The Netherlands, Oldenzaal
Tel: (31) 541 585000

New Zealand, Mt. Wellington
Tel: (64) 9 574 1744

Norway, Ski
Tel: (47) 64 91 10 00

Poland, Warsaw
Tel: (48) 22 57 32400

Portugal, Leca da Palmeira
Tel: (351) 22 999 7360

Romania, Bucharest
Tel: (40) 21 252 1382

Russia, Moscow
Tel: (7) 495 645 2156

Singapore, Jurong Town
Tel: (65) 6 887 6300

Slovenia, Novo Mesto
Tel: (386) 7 337 6650

South Africa, Kempton Park
Tel: (27) 11 961 0700

Spain, Madrid
Tel: (34) 91 675 7300

Sweden, Spånga
Tel: (46) 8 597 95000

Taiwan, Taipei
Tel: (886) 2 2298 8987

Thailand, Bangkok
Tel: (662) 717 8140

Turkey, Istanbul
Tel: (90) 212 482 9106

Ukraine, Kiev
Tel: (380) 44 494 2731

United Arab Emirates, Abu Dhabi
Tel: (971) 2 678 8587

United Kingdom, Warwick
Tel: (44) 1926 317878

USA, (Industrial)

Chicago Region, Naperville, IL
Tel: (630) 964 0796

Great Lakes Region, Fairlawn, OH
Tel: (330) 670 2680

Gulf Region, Houston, TX
Tel: (317) 619 8490

Northeast Region, Lebanon, NJ
Tel: (908) 236 4121

Pacific Region, Buena Park, CA
Tel: (714) 228 2509

Southern Region, Alpharetta, GA
Tel: (770) 619 9767

USA, (Mobile)

Central Region, Lincolnshire, IL
Tel: (847) 821 1500

Eastern Region, St. Helena Island, SC
Tel: (843) 838 2070

Midwest Region, Hiawatha, IA
Tel: (319) 393 1221

Southern Region, Aledo, TX
Tel: (817) 441 1794

Western Region, San Ramon, CA
Tel: (925) 735 9573

USA, Miami, FL
(Pan American Division)
Tel: (305) 470 8800

Venenzuela, Caracas
Tel: (58) 212 238 5422

HY13-1590-007/US 5/2009

Parker Hannifin Corporation
Hydraulic Pump Motor Division
2745 Snapps Ferry Road
Greeneville, TN 37745
phone 423 639 8151
fax 423 787 2418
www.parker.com/pumpmotor